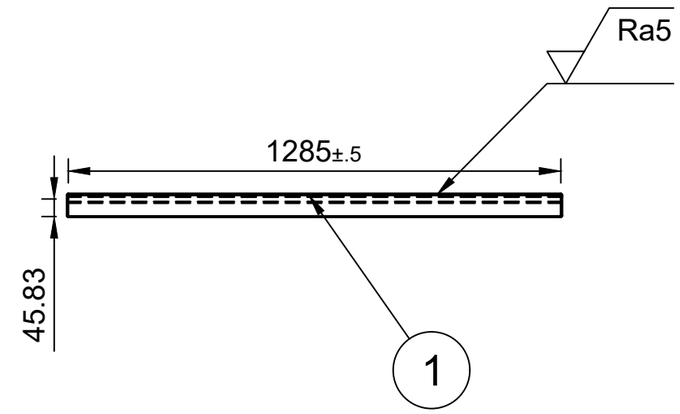

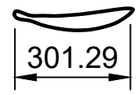

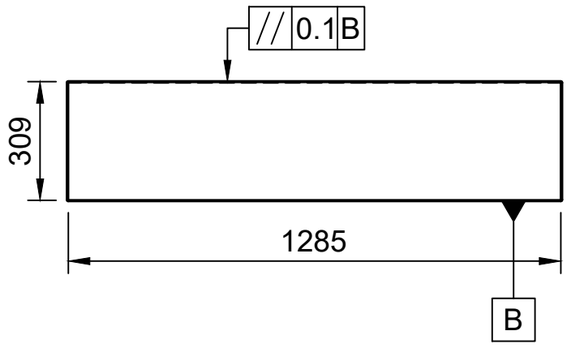

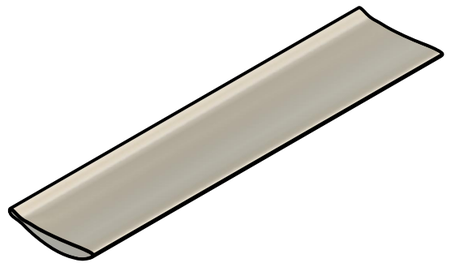

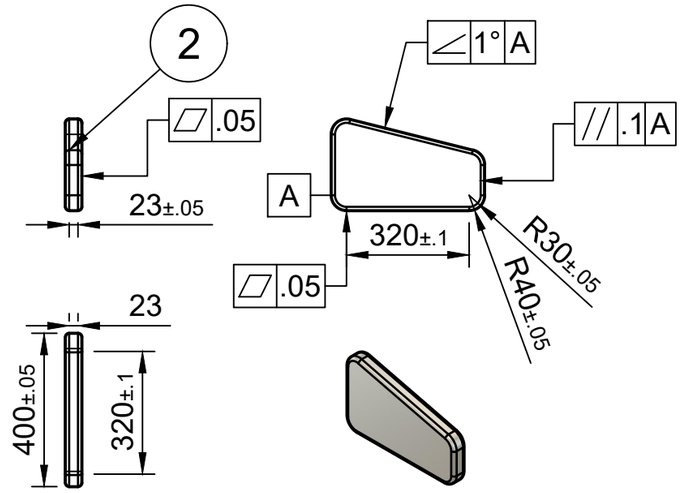

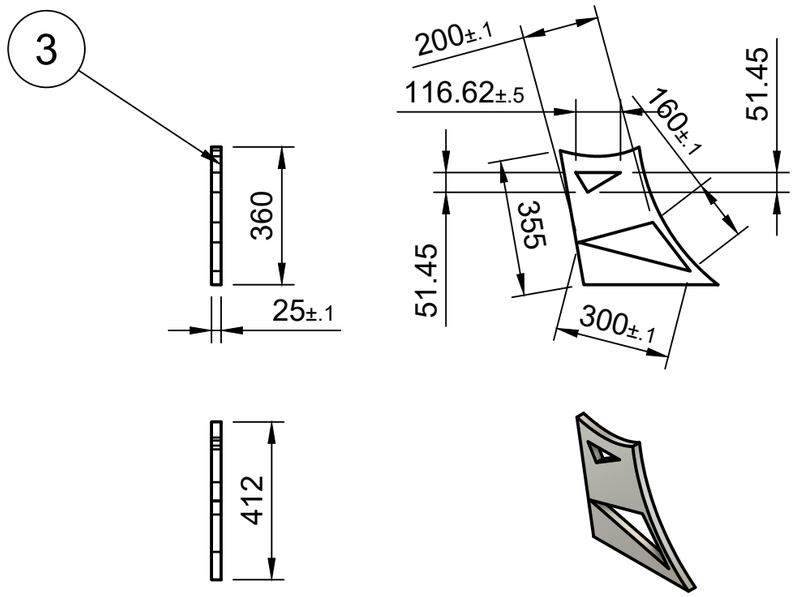

Parts List			
Item	Qty	Part Name	Material
1	1	Main wing rear	Aluminum
2	2	Main wing rear bar	Aluminum
3	2	Support	Aluminum

MACHINE DRAWING PRACTICE,MECHANICAL ENGINEERING,IIT MADRAS

NAME : CHELLA THIYAGARAJAN N

ROLL NO : ME17B179

BATCH : D.D ,TUESDAY

ASSIGNMENT NO:

DATE:

SCALE : 1:16 (From parent)

TITLE : Production Drawing

R0