UCD School of Electrical and Electronic Engineering

EEEN40280
Digital and Embedded Systems

AHB-Lite UART Block

Overview

This is a simple asynchronous serial interface block, designed to be a slave on an AHB-Lite bus. The bit rate is fixed at 19 200 bit/s, with 8 data bits, no parity and one stop bit. Both transmit and receive paths have 16-byte FIFO buffers. The status of each FIFO (empty, full) can be checked. The block can be configured to cause an interrupt on selected status changes.

Programmer's Model

The UART block presents four 8-bit registers to the processor, as shown in the table below. Although these registers are at word addresses, only the rightmost 8 bits are used. Other bits will be ignored on write and will read as 0.

Register	Relative Address	Access	Description
receive data	0x0	R	8-bit data from the receive FIFO. Only valid if the status bit indicates that receive data is available.
transmit data	0x4	R/W	Write: 8-bit data to be put into the transmit FIFO. Read: 8-bit data at the output of the transmit FIFO.
status	0x8	R	Bit 0: transmit FIFO full – unable to accept more data. Bit 1: transmit FIFO empty – transmission will stop. Bit 2: receive FIFO full – unable to accept more data. Bit 3: receive FIFO not empty – data available to read. Bits 7:4 are not used and read as 0.
control	0xC	R/W	Bits 3:0 enable the corresponding bit in the status register to cause an interrupt. Bits 7:4 are not used and read as 0.

An attempt to write transmit data while the transmit FIFO is full will be ignored. An attempt to read receive data while the receive FIFO is empty will return the previous receive data. If the receive FIFO is full, it should be read within 10 bit times, or receive data may be lost.

Implementation

The RTL diagram is shown on page 3. The hardware is described in Verilog in the files `AHBuart.v`, `fifo.v` and `uart.v`. A testbench is provided in `TB_AHBuart.v`.

All registers operate on the bus clock, with synchronous active-low reset.

Bus Interface

The block ignores the `HSIZE` signal and has no port for it. Registers can be accessed using word, half-word or byte transactions, and address decoding is not complete - only 2 of the address bits are used.

One register holds HADDR[3:2] from the address phase of a bus transaction, for use in the data phase. Write transactions and read transactions are identified during the address phase, and these signals are also held in flip-flops for use in the data phase.

The control register is implemented in the normal way, as a 4-bit register in the hardware, which captures write data from the bus on a write transaction to relative address 0xC.

A write to address 0x4 activates the write input to the transmit FIFO. If the FIFO is not full, this will cause the 8 least-significant bits of the `HWRITE` signal to be placed in the FIFO.

The four status bits from the FIFO buffers are combined into one `status` signal, and made available for reading. These status bits are also combined with the bits in the control register to generate the interrupt signal.

A read multiplexer selects the required 8-bit value for read transfers, based on the address bits captured in the address phase. This is combined with 24 zero bits to give a 32-bit read value.

No wait states are needed, so `HREADYOUT` is always 1. HRESP is always 0 (OKAY).

FIFO buffers
Each FIFO has two control signals, which take effect on the rising edge of the clock:

`wr` – write, causes the data at the `w_data` port to be stored in the FIFO, if it is not full. The FIFO updates its internal write pointer to point to the next free storage location, or asserts the `full` signal if there is no free storage location.

`rd` – read, indicates that the data at the `r_data` port has been accepted, and the FIFO should present the next data in the queue. This is ignored if the FIFO is empty. Otherwise the FIFO updates its internal read pointer to point to the next data, or asserts the `empty` signal if there is no more data (read pointer and write pointer are equal).

UART
The UART transmitter has one control signal, `txgo`, to indicate that the data on the `txdin` port should be transmitted. This control signal is ignored if the transmitter is not ready. The ready state is reached as the stop bit of the previous transmission is being sent, and is indicated on the `txrdy` status output. The UART can transmit continuously if `txgo` is always asserted – `txrdy` will go high for one clock cycle at the end of each data byte, and this can be used as an indication that the data at the `txdin` port is being accepted for transmission.

The UART receiver has no input control signals – it responds to the serial received data. When a byte has been received, the data is presented at `rxdout` and the `rxnew` status output is asserted for one clock cycle to indicate that new data is available. The data remains valid until the next byte is received.

Transmit data path
The transmit data passes through a FIFO buffer and then to the transmit part of the UART block. Data is placed in the transmit FIFO on a bus write transaction to relative address 0x4.

Whenever the transmit FIFO is not empty, the `txgo` signal is asserted. If the UART `txrdy` signal is also asserted, the UART will accept the data at the FIFO output. This same combination of signals is used to drive the `rd` port on the FIFO, so that it presents new data, to be transmitted the next time the UART is ready.

Receive data path
The UART `rxnew` signal is used to write received data bytes into the receive FIFO. If the FIFO is full, this signal will be ignored and data will be lost.

A bus read from address 0x0, will return the output data of the receive FIFO. If the FIFO is not empty, the read transaction will also cause a pulse on the `rd` port of the FIFO, to indicate that the data has been read. The FIFO will then present the next data, if any.

Registers to hold signals from address phase

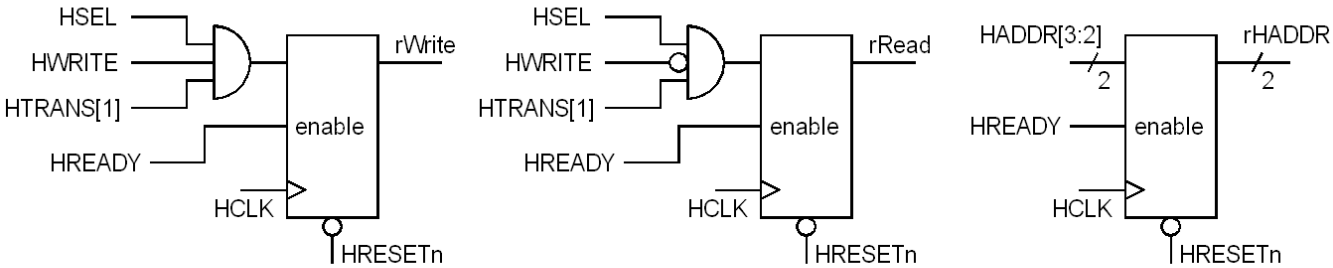

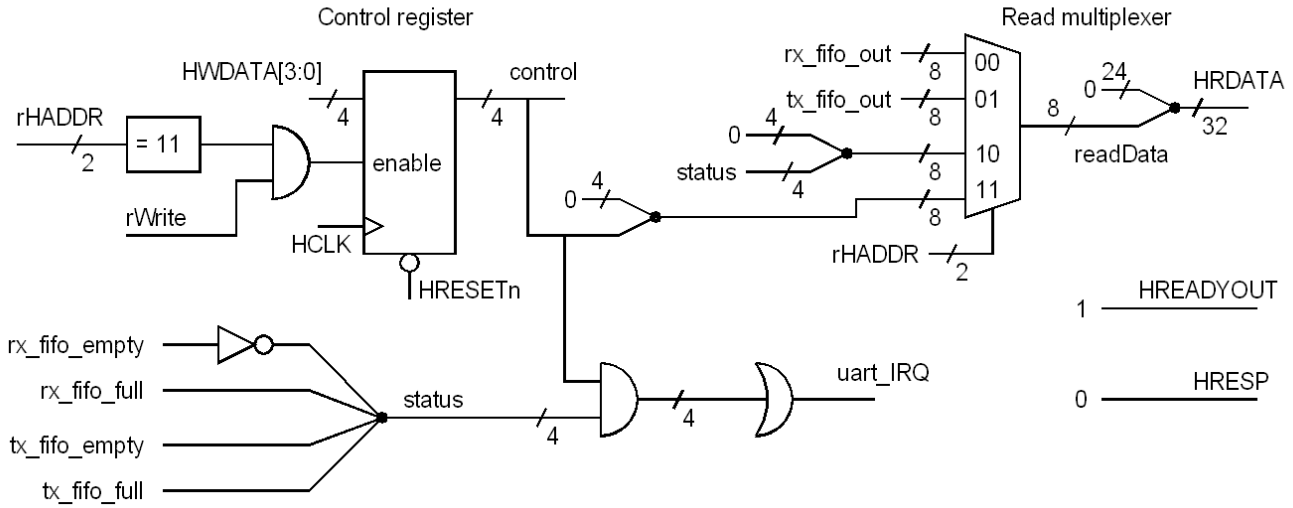

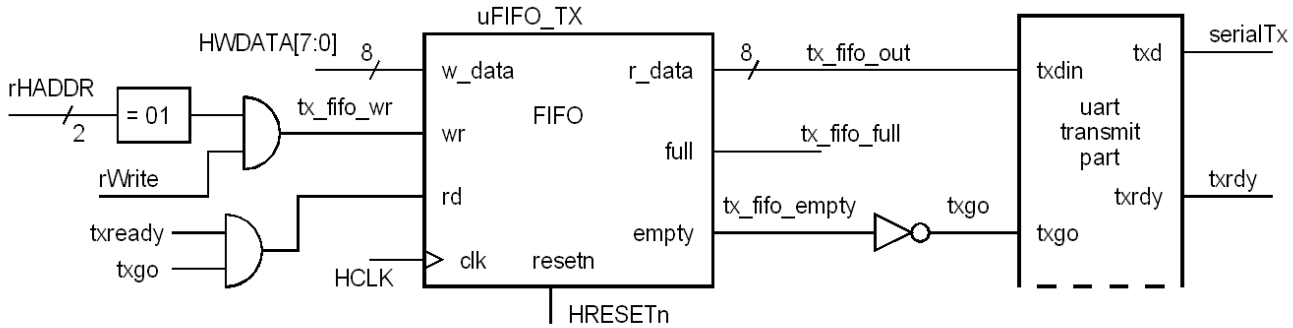

Transmit data path

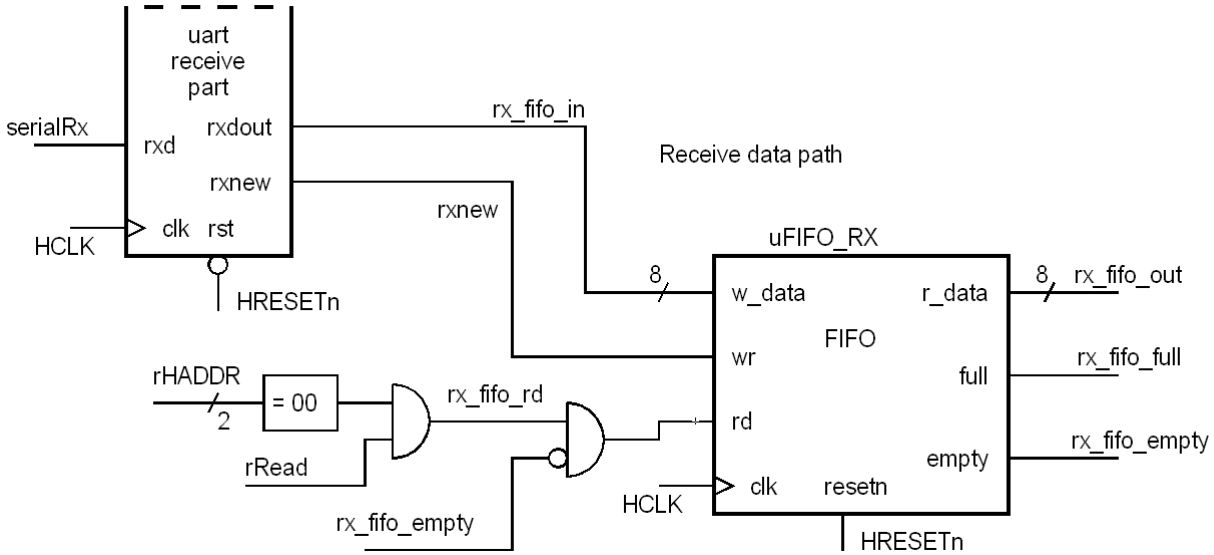

Receive data path