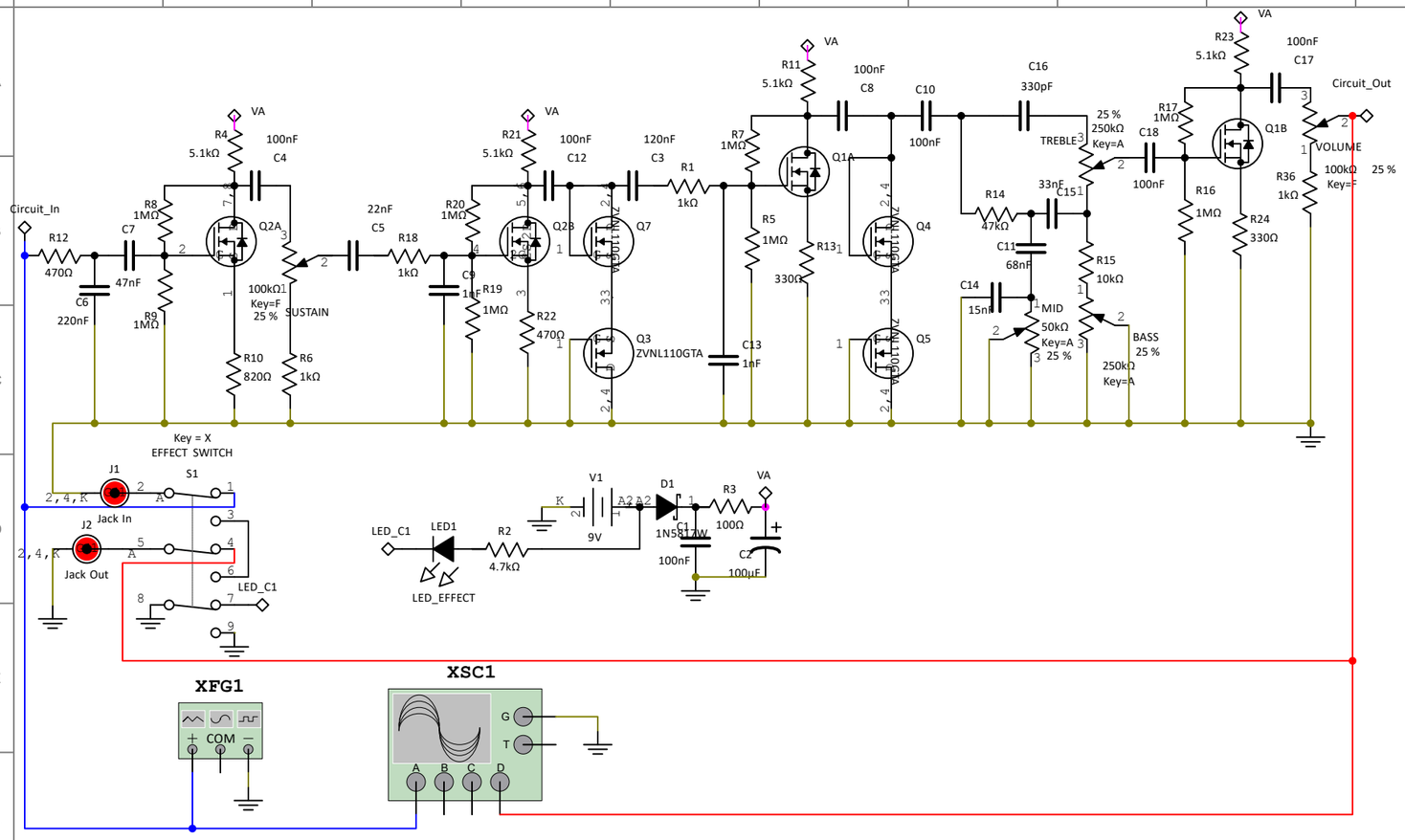

thomasbe86@gmail.com		
Title: MO(S)GUL	Desc.:	
Designed by: Thomas Be	Number: MSGLV1	Revision: V1
Status: Final	Date: 23 NOV 2024	Size: A3
As Built: Yes	Sheet 1 of 1	RhPf Electronics