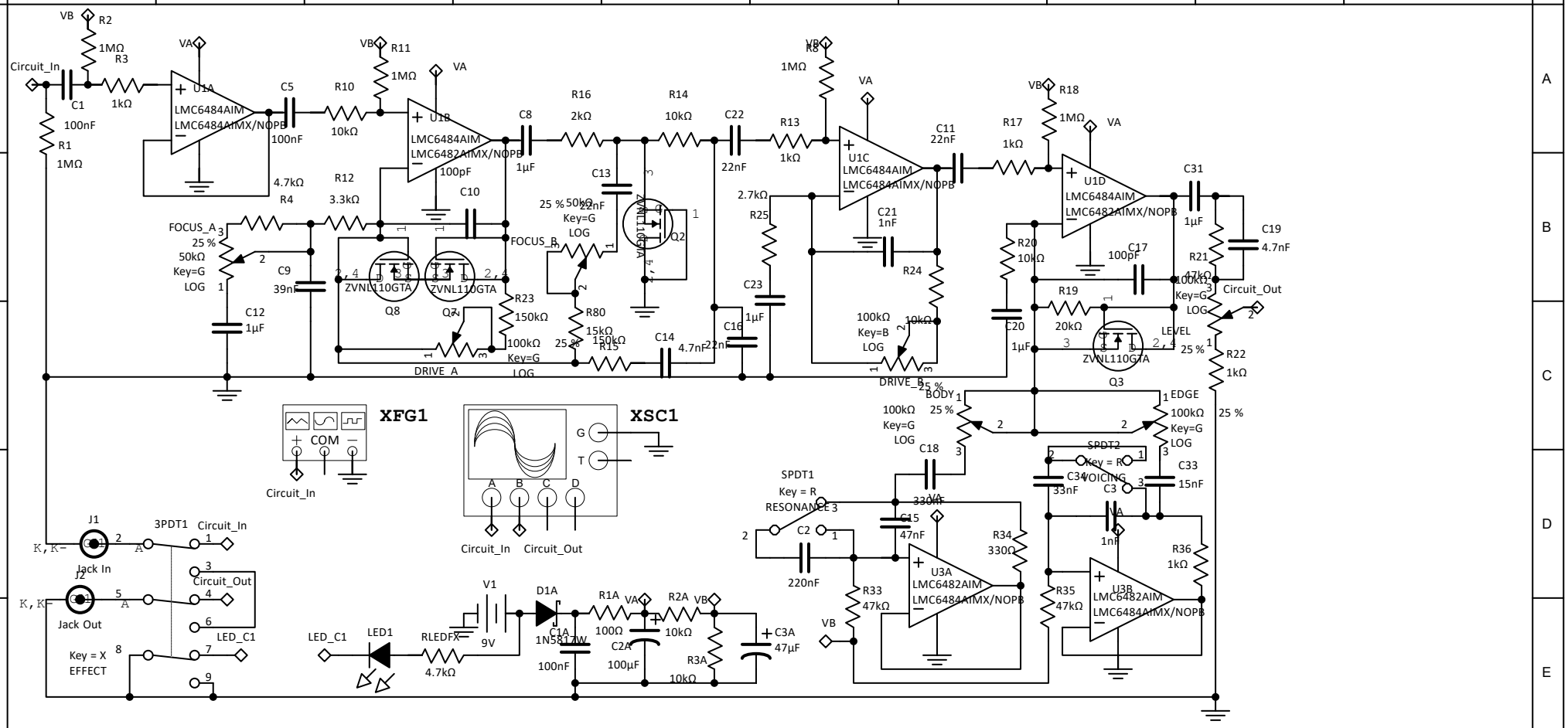

RhPfGh Electronics	thomasbe86@gmail.com	
Title: MOSFERATU	Desc.: For Prototype V2	
Designed by: Thomas Be	Document No: MSFTUV1	Revision: 1
	Date: 07/12/2024	Size: A4
	Sheet 1 of 1	