Board to Be Wild
Engineering Design Report

Thomas Gaitan

April 17, 2026

1 Introduction

Describe your project and its purpose.

2 Initial Design and Planning

For this cutting board, the design will simply include a stylized Chinese quote. The quote literally translates to, "many mouths are difficult to tune" a metaphor for "You cannot please everyone". When I began looking for my quote,

Figure 1: Initial design, made in Adobe Illustrator

3 Material Preparation

Explain sanding and preparation.

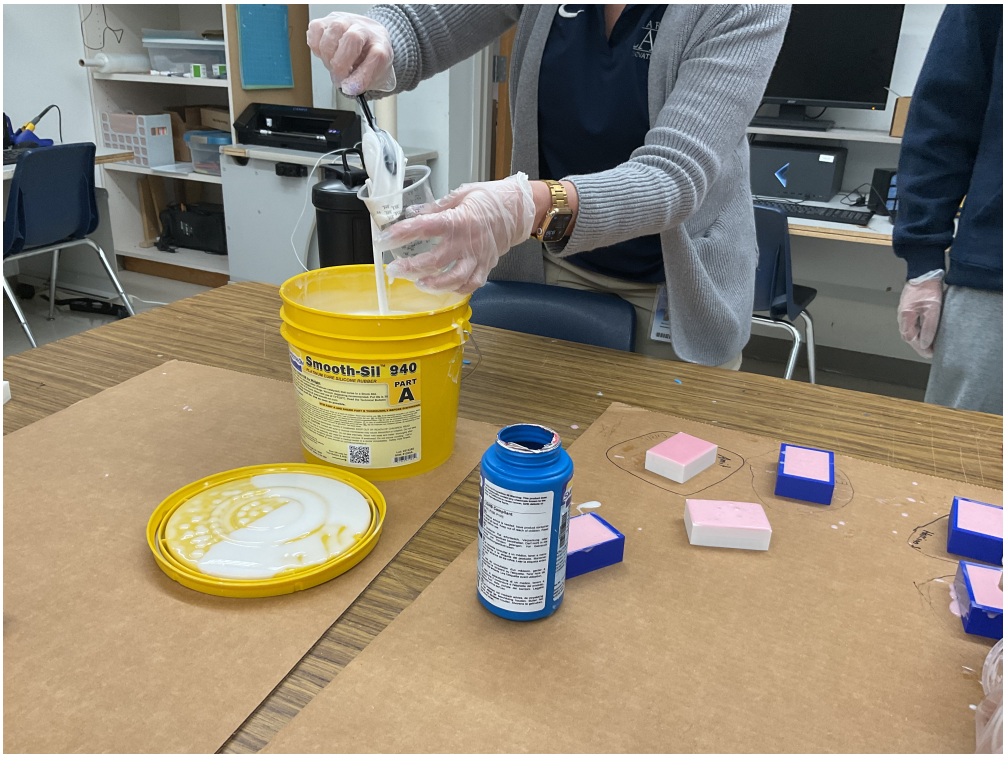

Figure 2: Initial wood dimensions

4 Digital Design

Describe your CAD/design process.

5 CNC and Manufacturing

Explain how the CNC machine was used.

6 Resin Process

Explain resin usage (if applicable).

7 Final Product

8 Reflection

Discuss challenges, improvements, and learning.

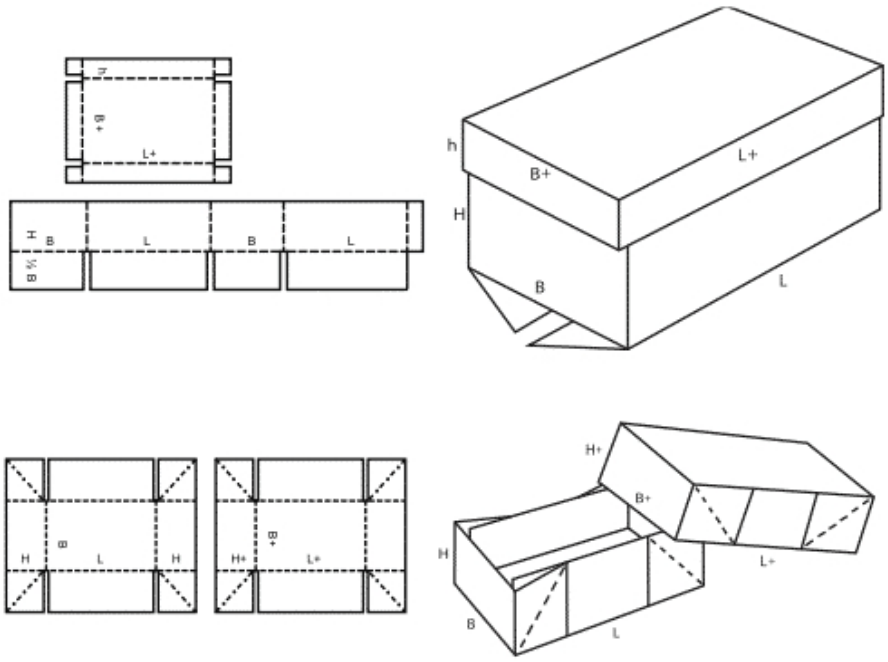

Figure 3: Final cutting board