EMBEDDED
SECURITY SOLUTIONS

SafeXcel-IP-97

Look-Aside Packet Engines for Single and Multi-Core SoCs

→ key features

- Very high-performance security protocol processing
- Configurations for 5, 10 and 20 Gbps
- Offloads security processing from host CPU
- Optimized for SoCs, application and communication processors
- Efficient integration with QuickSec IPsec and Matrix SSL software toolkits
- Superior throughput across a wide range of packet sizes
- Options include Wireless algorithms and AES-XTS for storage servers

Security Protocol Support is a Requirement, so is Throughput

Security is now a basic requirement for networking and communications. It is needed by every device and at every point where data is touched, stored or transmitted; systems at every level demand high performance and efficiency as well as robust security. A trade-off is not acceptable.

Network processing units, servers and communications processors must all be enabled to support the processing of network security protocols. Common protocol processing options include IPsec, SSL, TLS, DTLS and sRTP. Regardless of the protocol used, designers must find a way to implement the security processing while maintaining the high levels of throughput required by today's networks.

The SafeXcel-IP-97 (EIP-97) is a high performance look-aside packet engine that combines a comprehensive set of cryptographic functions with the flexibility of a standard System Bus interface and the ability to perform Direct Memory Access (DMA). The module's design combines high performance with a relatively small gate count and is suitable to achieve maximum performance even in systems with high bus and memory latencies.

The main function of the module is to provide security protocol processing, and cryptographic algorithm acceleration as required for the processing of network security protocols. Each of the different protocols that the EIP-97 supports has similar offload needs and uses similar cryptographic algorithms. Packet classification is supported via Look-Aside operations on the host CPU.

Get to Market Faster with Security IP that Fits Your Design

Get to market quickly with security IP that is optimized for your design, providing the features you need without the expense and schedule impact of special development work. The EIP-97 family of packet-processing engines implements security functionality using dedicated hardware IP, giving designs a high level of CPU offload, higher throughput, lower power consumption, and a higher degree of security compared to software-based implementations.

Designed for an optimal performance over gate count ratio, the EIP-97 family offers a choice of configurations with different cryptographic algorithm capabilities. The modules all provide a reliable and cost-effective IP solution that is easy to integrate into network, server and communication processor designs. INSIDE Secure's experts in cryptographic IP will work with your design team to help you select the optimal engine for your unique requirements.

All of INSIDE Secure's semiconductor IP modules are delivered as synthesizable Verilog RTL source code, with a self-checking RTL test bench, including test vectors and expected result vectors, as well as simulation scripts and synthesis scripts. A Driver Development Kit accelerates the integration process.

driving trust™ inside SECURE

www.insidesecure.com

High-Performance Security Processing via CPU Offload

The EIP-97 family has a unique capability to maximize data plane offloading from a host processor to dedicated hardware. In many architectures, hardware assist is limited to modules that perform cryptographic security processing under full control of the primary processor, which needs to parse and classify each individual packet, process them to some extent, and then submit defined tasks to individual cipher and hash accelerators. At high data rates and for small packet sizes, this approach creates a significant processing burden on the processor and it may even create an overall throughput bottleneck.

An alternative approach, implemented in the EIP-97, is to off-load the primary processor, which can be a multi-CPU processor, so it is not involved in executing cryptographic processing for each packet. This allows the primary processor to use its clock cycles for data flow setup, packet classification, key management and other tasks. The result is a high-performance security solution that delivers multi-Gigabit rate processing.

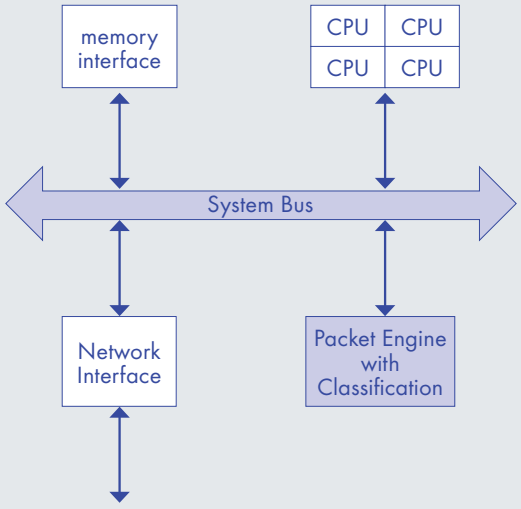

Figure 1: The EIP-97 Look-Aside Packet Engine placed into a system architecture

Complete Hardware/Software Solution

Integrated software support is increasingly becoming a critical success factor for secure protocol processing. Hardware security functionality in a network, server or communications processor needs to be supported by state-of-the-art software to make the processor successful in its market. Through its Driver Development Kit, the EIP-97 works seamlessly with INSIDE Secure's leading QuickSec IPsec and MatrixSSL toolkits. The advanced architecture in these toolkits offloads the packet transformation, content encryption and hash algorithm processing to the EIP-97's Security Engine, maximizing overall application performance.

A Range of High Performance Options

The EIP-97 targets applications in systems with large throughput requirements and is designed for use in multi-CPU systems where all the CPUS require the services of a high performance packet engine. In addition to supporting multiple CPUs, the EIP-97 architecture offers mechanisms for supporting application separation.

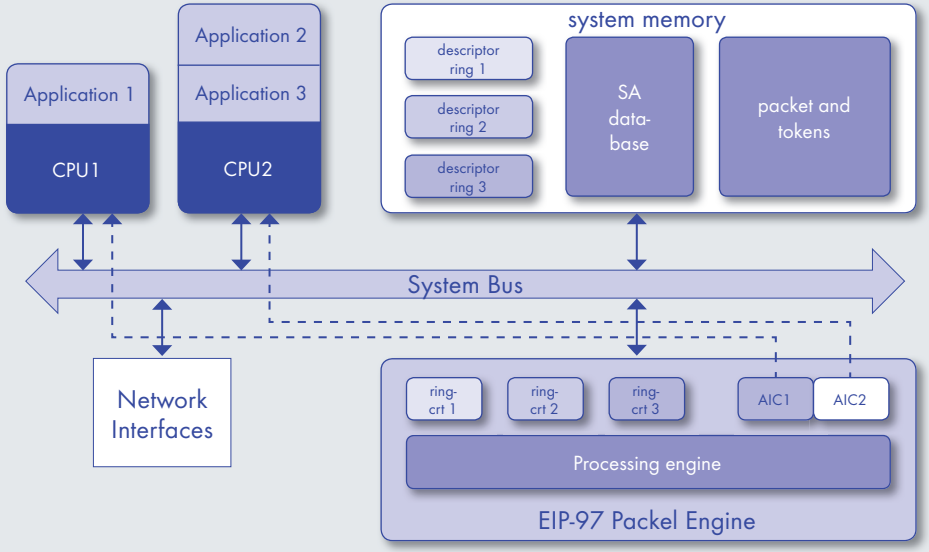

Figure 2: The EIP-97 Packet Engine supports multiple CPUs and multiple applications

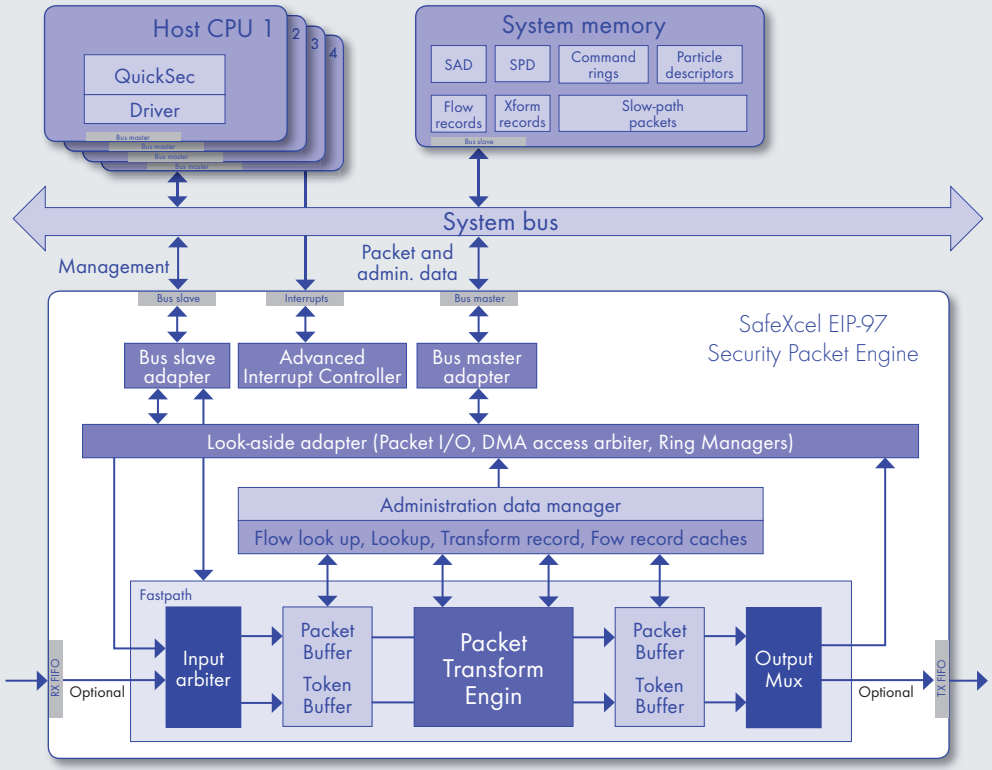

Figure 3: The EIP-97 Block Diagram

The module is available in a range of configurations, addressing different protocol processing performance points from 1 Gbps to 20 Gbps. Higher levels of throughput are achieved by using up to 8 instances of an internal low-level processing engine. This configuration flexibility allows designers to choose from among a granular set of tradeoffs, selecting the right balance between gate count and performance throughput for each specific application.

Performance and Gate Counts for Selected Configurations*

Configuration	Throughput @ 500 MHz with 1500B packets**	Gate Count 28-40 nm (KGates)	Memory (KBytes)
EIP-97b-ies	5 Gbps	590	2.5
EIP-97c-ies	10 Gbps	990	4.0
EIP-97d-ies	20 Gbps	1925	7.0

*For IPsec/SSL/TLS/DTLS s using AES and SHA-1, other algorithm combinations have slightly different performance. Other configurations are available (–SHA-384/512, –ARC4, +KASUMI/SNOW/ZUC, +AES-XTS).

** Small packet throughput is approximately half of these values.

Specifications: EIP-97 Look-Aside Packet Engines

- **Max Clock Frequency:** 800 MHz in 28 nm
- **Choice of Hardware Interfaces:** AXI (32 or 64 bit address, 32 or 64 or 128 bit data bus) or PLB (128 bit data bus)
- **Standard Crypto and Hash/ HMAC Algorithms:** AES (ECB, CBC, CTR, ICM),3DES (ECB, CBC), MD5, SHA-1, SHA-224, SHA-256
- **Optional Crypto Algorithms:** SHA-384, SHA-512, ARC4, KASUMI, SNOW, ZUC, AES-XTS
- **Combined Modes:** AES-GCM, AES- CCM, AES-XCBC-MAC, HMAC

The products identified and/or described herein may be protected by one or more of the patents and/or patent applications listed in related datasheets, such document being available on request under specific conditions. Additional patents or patent applications may also apply depending on geographic regions.

© INSIDE Secure 2013. All Rights Reserved. INSIDE Secure®, INSIDE Secure logo and combinations thereof, and others are registered trademarks or tradenames of INSIDE Secure or its subsidiaries. Other terms and product names may be trademarks of others.

0813 - Document non contractuel - zaostratecrea.com