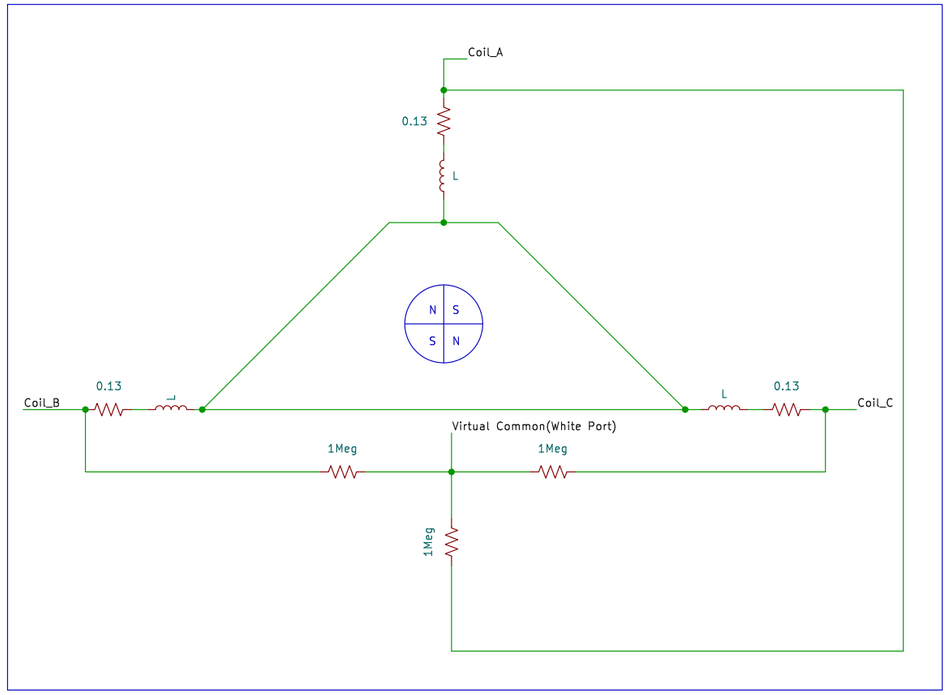

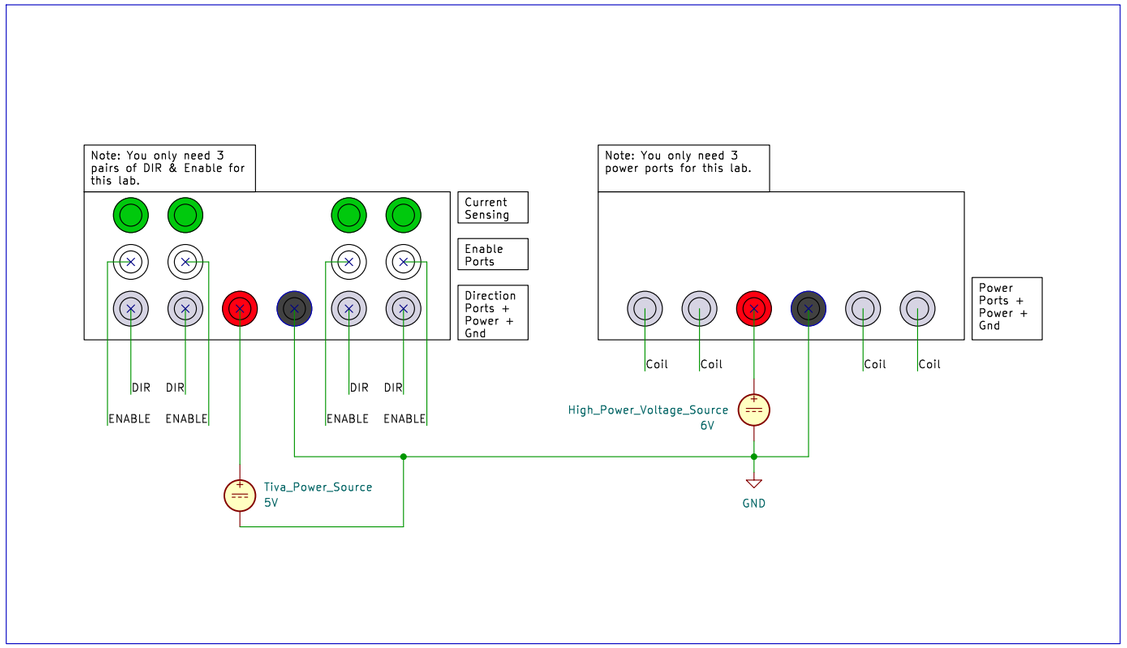

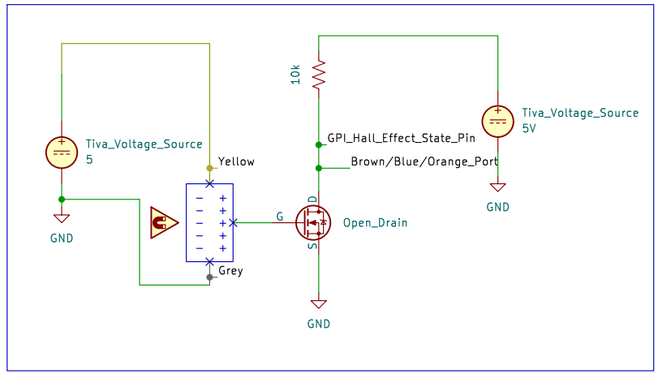

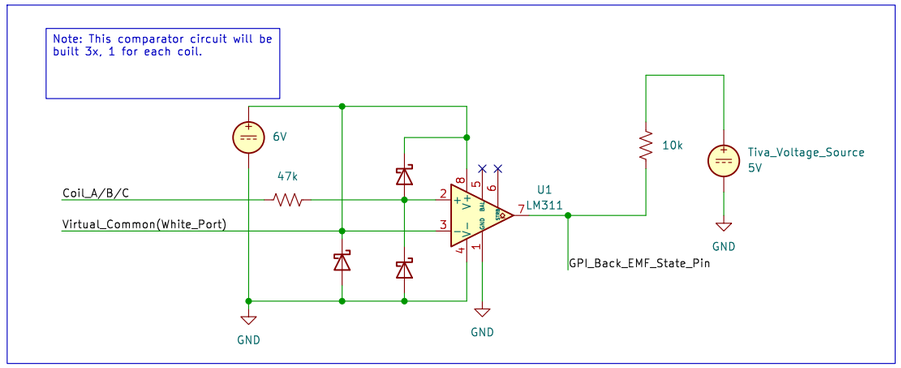

Sheet: /
File: Lab4_Mechatronics.kicad_sch

Title:

Size: A3	Date:	Rev:
KiCad E.D.A. eeschema 7.0.8-7.0.8~ubuntu22.04.1		Id: 1/1