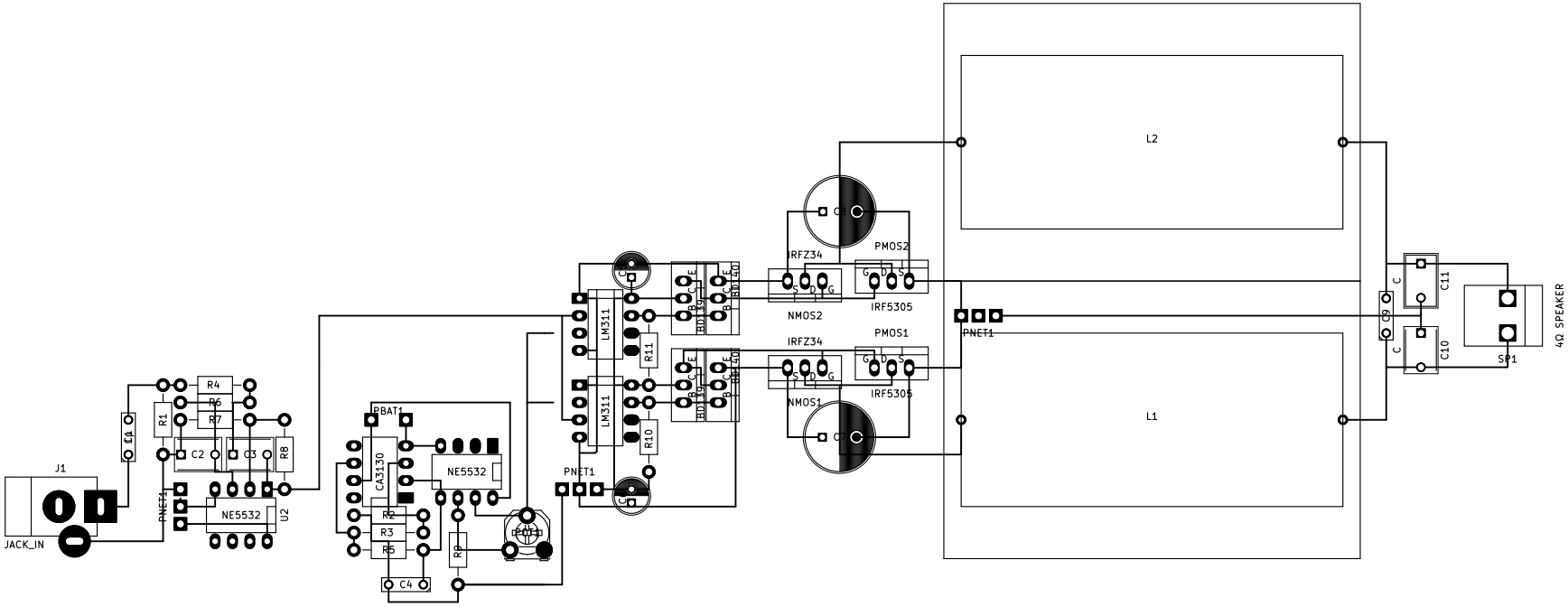

Sheet:
File: classd.kicad_pcb

Title:

Size: A4	Date:	Rev:
KiCad E.D.A. kicad (after 2015-mar-04 BZR unknown)-product		Id: 1/1