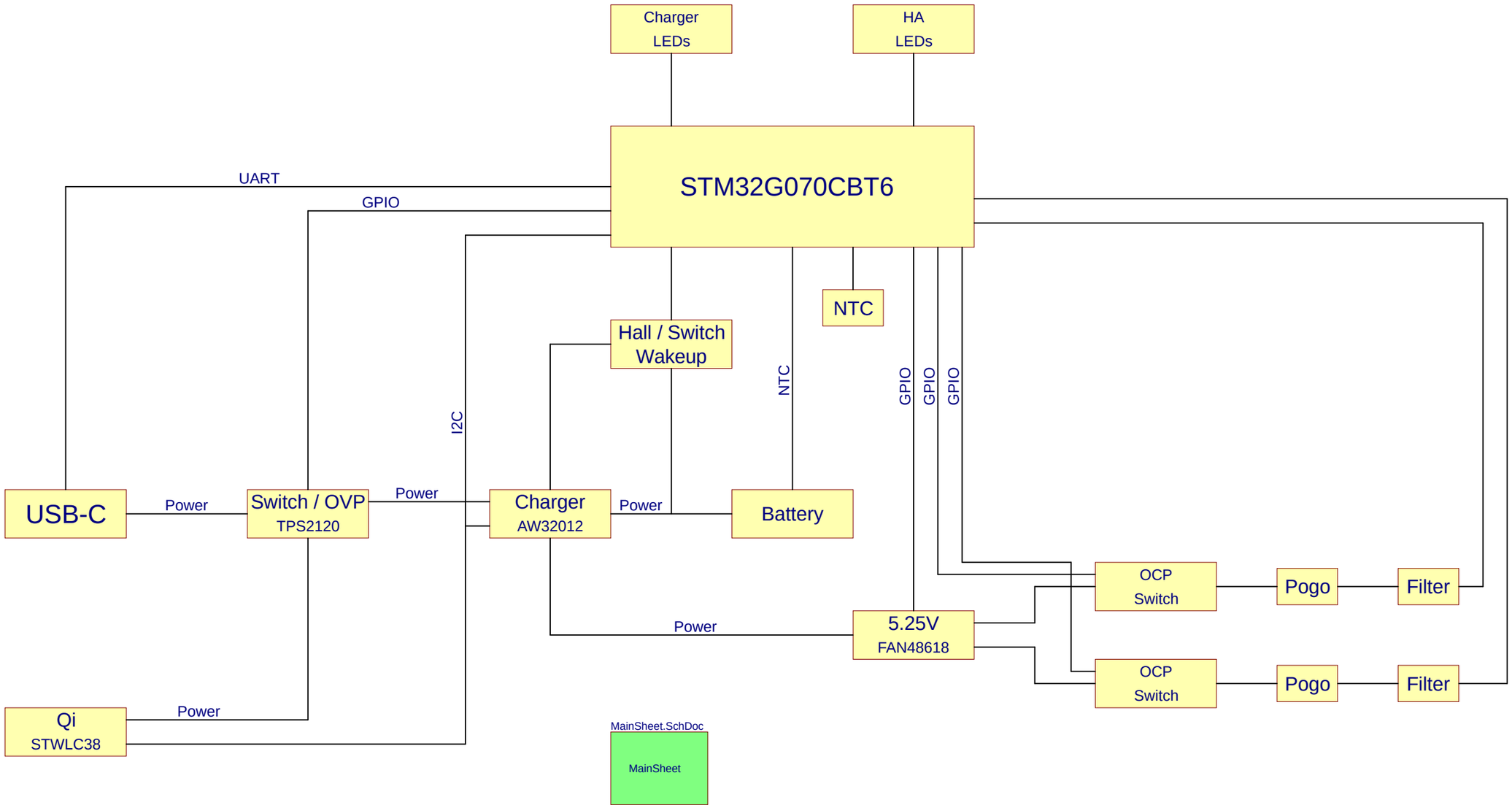

Version	S2	Doc Name	WSA_MomentC_S2_SCHEMATIC_CHG-SW_20241031		
Issue	20241031	Author	M. Schmid	Variant	CHG-SW
cicor		ApprovedBy	I. Senn	Sheet Title	Block Diagram
		Project	MomentCharger.PrjPcb		Sheet
Designed for WSA		Additional Info			1/ 4

© Swisstronics Contract Manufacturing AG 2024. All rights reserved.

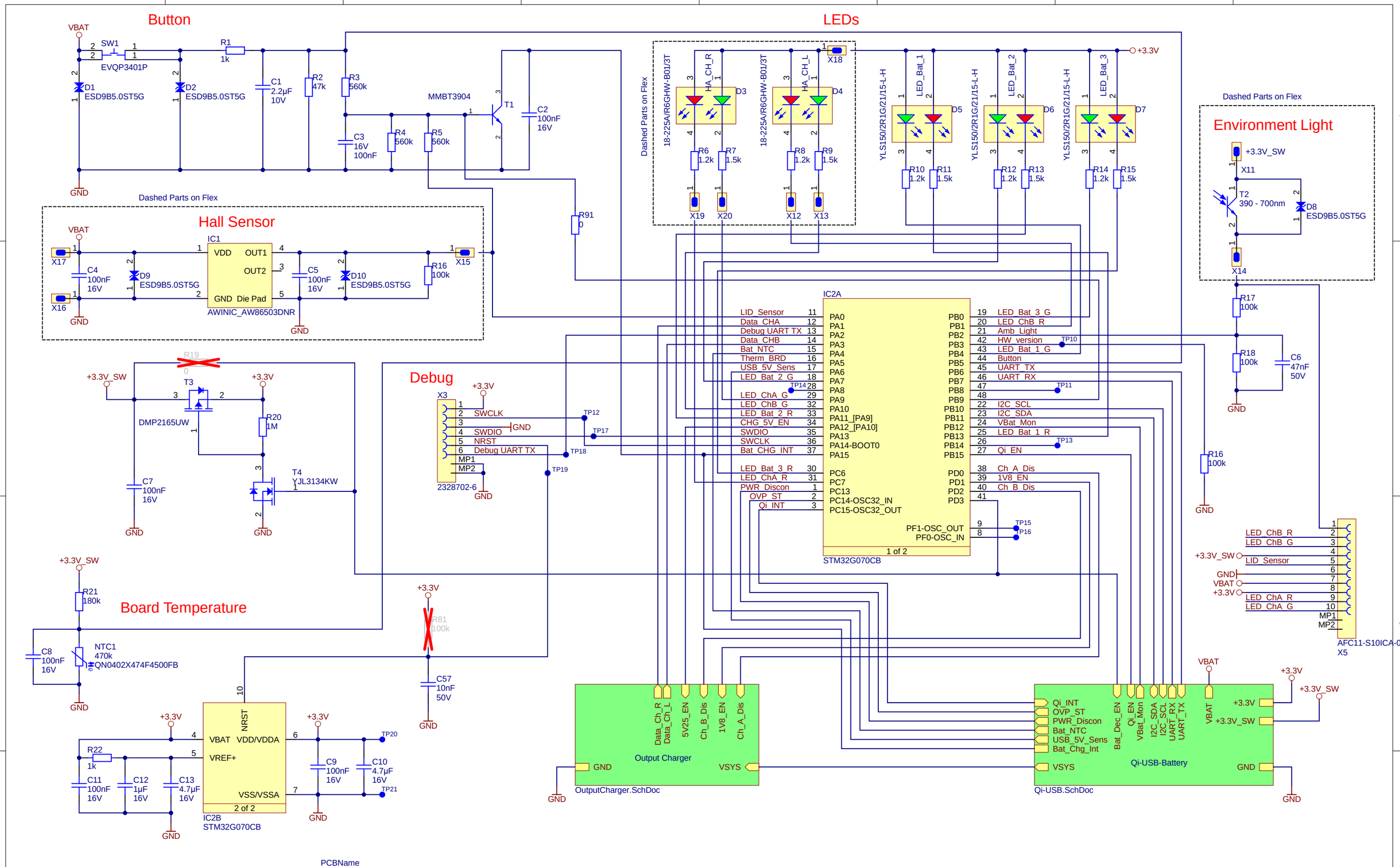

Version	S2	Doc Name	WSA_MomentC_S2_SCHEMATIC_CHG-SW_20241031		
Issue	20241031	Author	M. Schmid	Variant	CHG-SW
cicor		ApprovedBy	I. Senn	Sheet Title	MainSheet
		Project	MomentCharger.PrjPcb		Sheet 2 / 4
Designed for WSA		Additional Info			

© Swisstronics Contract Manufacturing AG 2024. All rights reserved.

ILIM: 1.31A, lower not possible

USB Power Input

X1 USBC USB2.0: A1/B12 GND, A4/B9 VBUS, A5 CC1, B8 SBU2, B7 D-, A6 D+, B6 D+, A7 D-, B5 CC2, A8 SBU1, B4/A9 VBUS, A12/B1 GND, Shield

F1 1.5A/32VAC/63VDC

VUSB_5V

D11 ESD9B5.0ST5G, C14 10nF 50V, C15 4.7µF 25V, R25 43k, R27 3.3k, R32 10 k, R29 5.1k, R30 5.1k, D12 ESD9B5.0ST5G, D13 ESD9B5.0ST5G, C60 100nF 50V

UART_RX — R34 1k

UART_TX — R36 1k

USB_5V_Sens — R38 10 k

IC3 TPS2120: IN1, IN1, IN1, PR1, OV1, IN2, IN2, IN2, OV2, OUT, OUT, OUT, OUT, OUT, OUT, SEL, ST, SS, ILIM, GND

PWR_IN — TP22

+3.3V — R26 10 k

OVP_ST

R31 47k, R35 10 k, R33 100k, C17 100nF 16V

PWR_IN, +3.3V — R23 100k, R24 100k, T5 MMBT3904, R28 100k, C16 16V 100nF

PWR_Discon

Battery Charging

IC4 AW32012: IN, VDD, INT, SCL, SDA, SYS, BAT, NTC, GND

R37 560k 1%, R44 560k 1%, R83 0, R39 0, R40 0, R82 100k, R41 5.1k, R42 5.1k, R43 100k, R84 100k, R45 0, R46 0, C19 4.7µF 16V, C18 1µF 16V, Bat_Chg_Int

VSYS, +3.3V_SW, PWR_IN

X4 2801CR-03SG-H085-TR, C20 4.7µF 16V, C21 4.7µF 16V, D14 ESD9B5.0ST5G, C58 16V 100nF

7-bit I2C address: 0x49

Qi_INT, I2C_SCL, I2C_SDA, Qi_EN, Bat_NTC, VBAT

Qi Power Input

IC5 STWLC38: BOOT1, COMB1, COMA1, AC1_1, AC1_2, AC1_3, AC1_4, AC2_1, AC2_2, AC2_3, AC2_4, COMA2, COMB2, BOOT2, GPIO0, GPIO1, GPIO2, SDA, SCL, ENB, INTB, VS, NTC, VSSP_1, VSSP_2, VSSP_3, VSSP_4, VAA, VSSA, VDD, VSSD, VRECT_1, VRECT_2, VRECT_3, VRECT_4, VRECT_5, IEXT, VOUT_1, VOUT_2, NC

C22 47nF 50V, C24 100nF 50V, C26 100nF 50V, C30 100nF 50V, C23 47nF 50V, C25 22nF 50V, C27 10nF 50V, C32 1nF 50V, C33 10nF 50V, C36 22nF 50V, C40 47nF 50V, R47 100k, R48 0, R49 0, D15 13 V, D16 13 V, TP6, TP7, TP1, TP2, TP3, TP4, TP5, TP8, TP23

Qi_5V

R52 100 500mW, C28 10µF 25V, C29 10µF 25V, C61 100nF 16V, C34 10µF 25V, C35 10µF 25V

7-bit I2C address: 0x61

R54 10 k, C41 4.7µF 16V, C42 1µF 16V

+3.3V, +3.3V_SW, GND

Battery Voltage Measurement

T6 DMP2165UW, R50 1M, R51 200 k, T7 YJL3134KW, C31 16V 100nF, R53 100k, VBat_Mon, Bat_Dec_EN

IC6 LR6232B33FT5AG: IN, EN, OUT, GND, EPAD

C37 1µF 16V, C38 1µF 16V, C39 1µF 16V, C59 22µF 10V

© Swisstronics Contract Manufacturing AG 2024. All rights reserved.

Version	S2	Doc Name	WSA_MomentC_S2_SCHEMATIC_CHG-SW_20241031		
Issue	20241031	Author	M. Schmid	Variant	CHG-SW
cicor		ApprovedBy	I. Senn	Sheet Title	Qi-USB
		Project	MomentCharger.PrjPcb		Sheet 3 / 4
Designed for WSA		Additional Info			

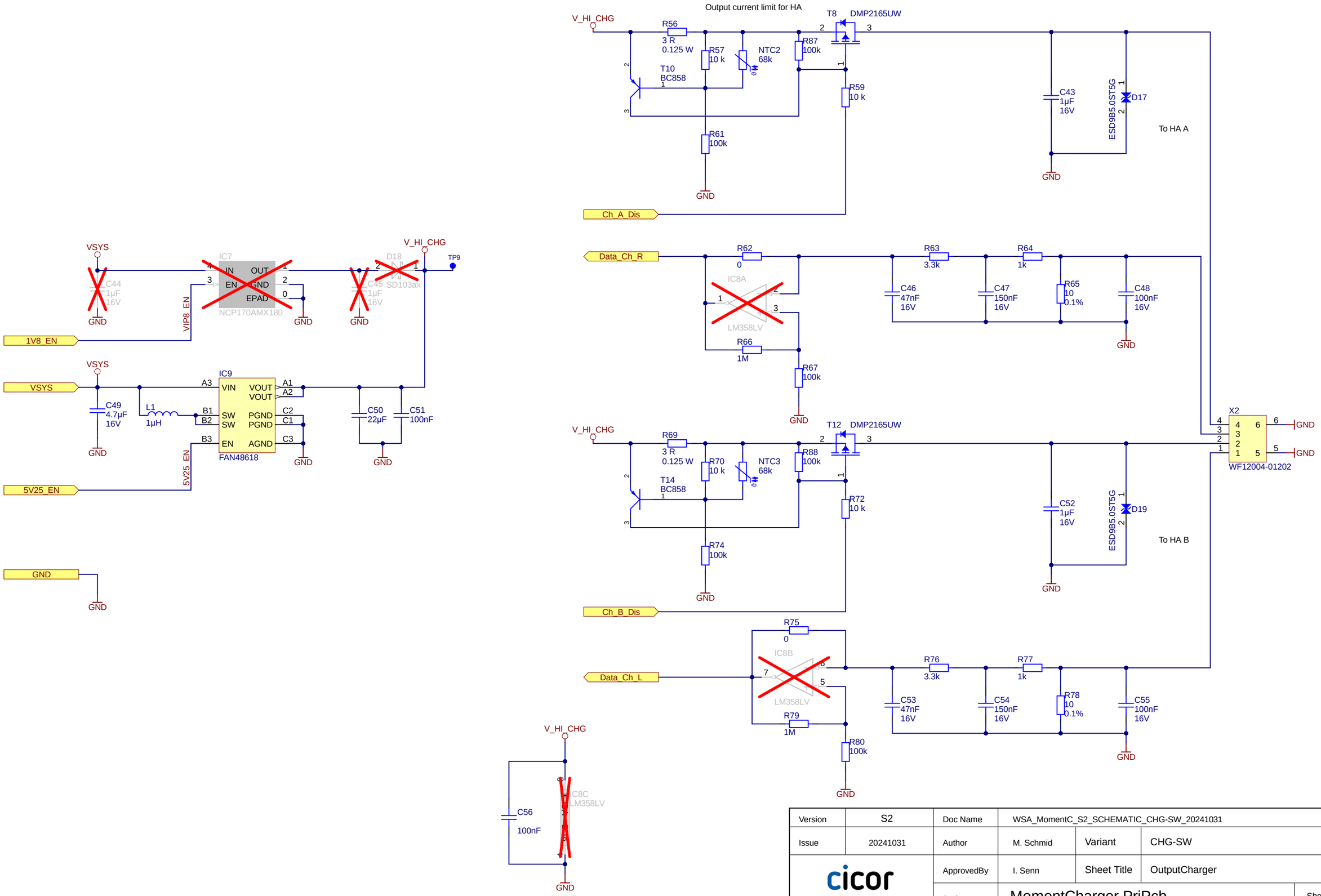

Version	S2	Doc Name	WSA_MomentC_S2_SCHEMATIC_CHG-SW_20241031		
Issue	20241031	Author	M. Schmid	Variant	CHG-SW
cicor		ApprovedBy	I. Senn	Sheet Title	OutputCharger
		Project	MomentCharger.PrjPcb		Sheet 4 / 4
Designed for WSA		Additional Info			

© Swisstronics Contract Manufacturing AG 2024. All rights reserved.