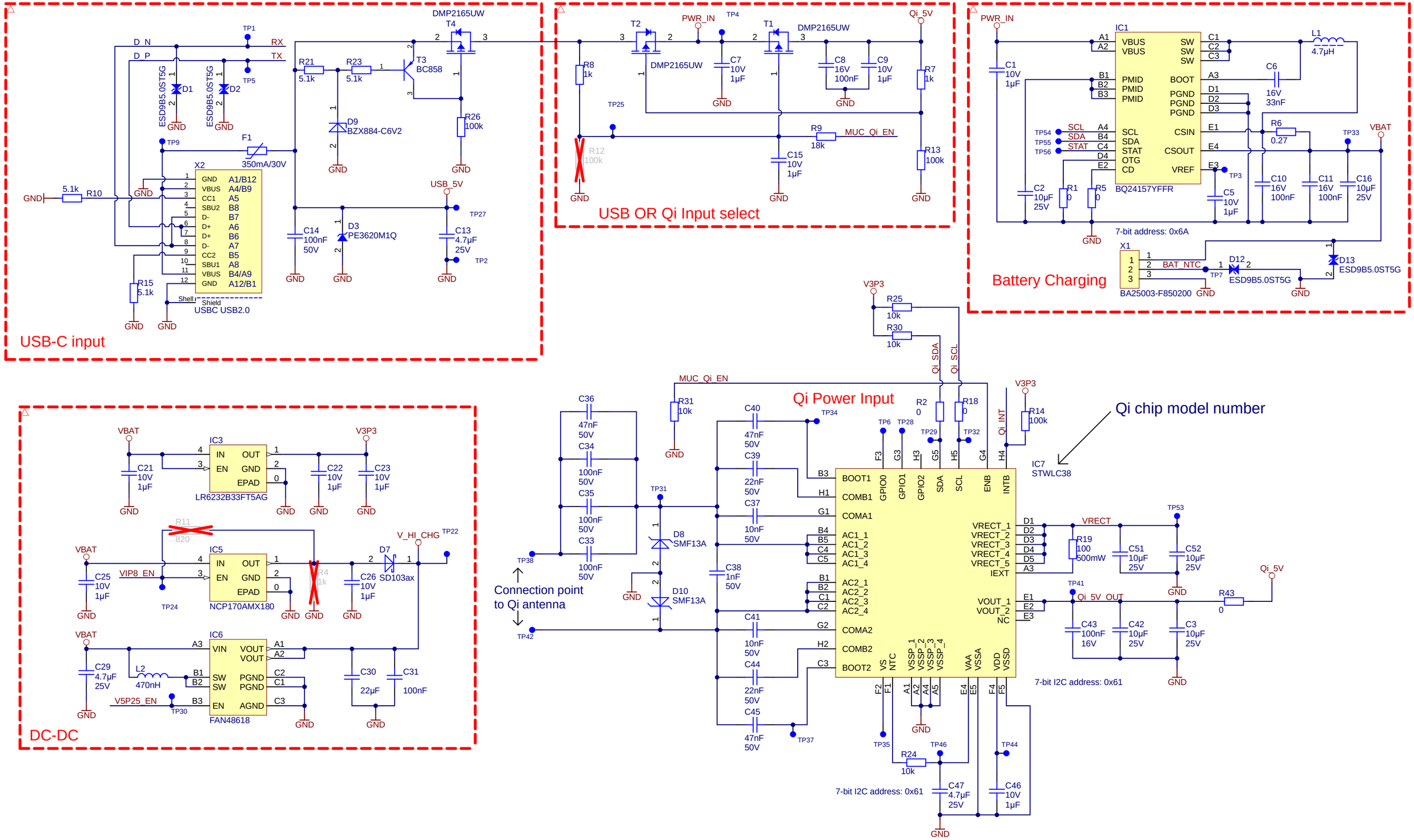

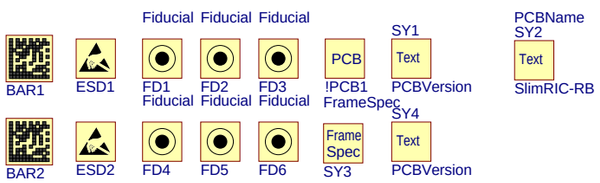

© Swisstronics Contract Manufacturing AG 2025. All rights reserved.

Version	S4	Doc Name	WSA_SlimRIC-RB_S4_SCHEMATIC_Std_20250401		
Issue	20250401	Author	M. Schmid	Variant	Std
cicor		ApprovedBy	S. Forrer	Sheet Title	ChargeSupplies
		Project	SlimRIC-RB.PrjPcb		Sheet
Designed for WSA		Additional Info			1/ 2

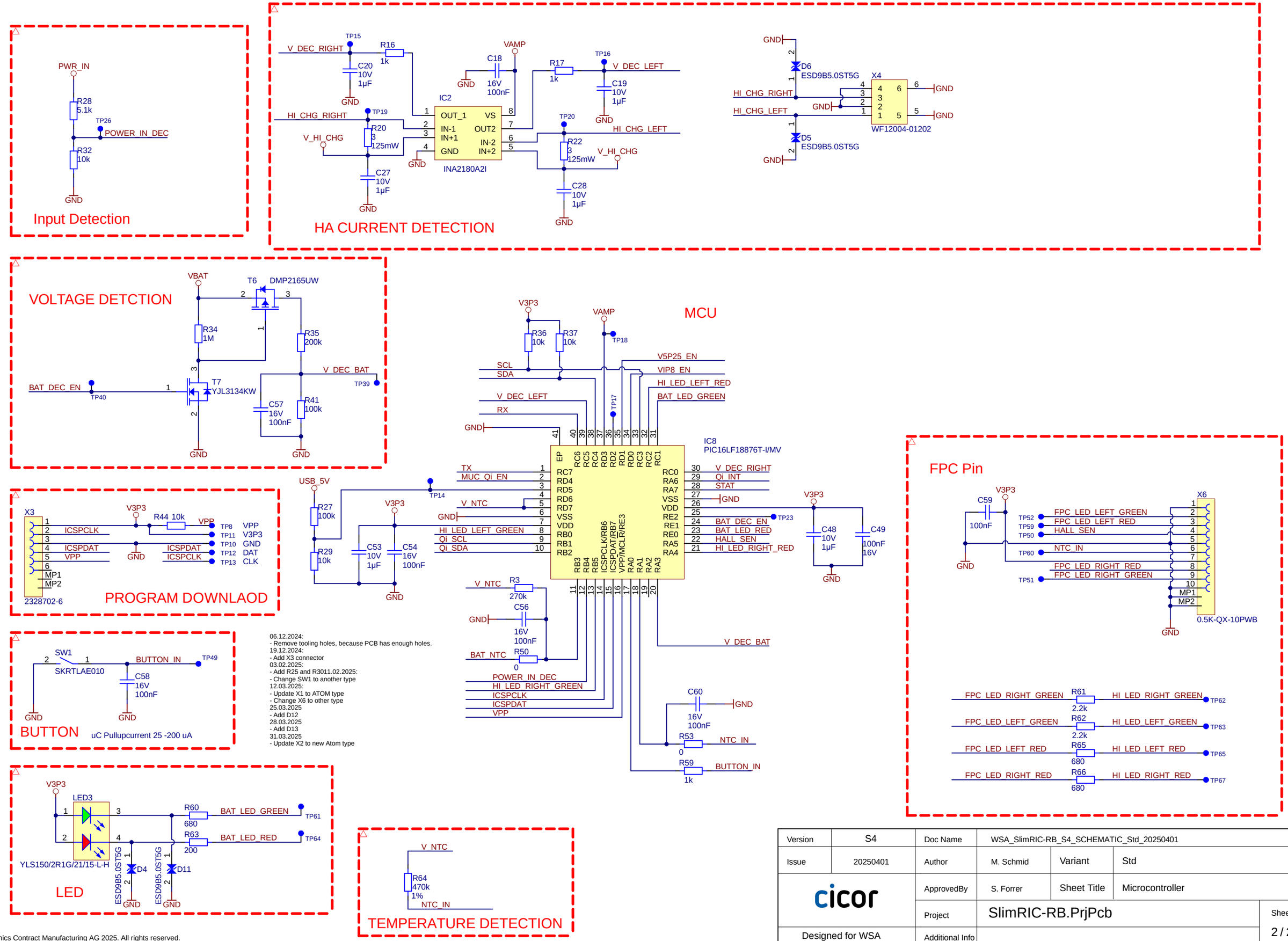

Version	S4	Doc Name	WSA_SlimRIC-RB_S4_SCHEMATIC_Std_20250401		
Issue	20250401	Author	M. Schmid	Variant	Std
cicor		ApprovedBy	S. Forrer	Sheet Title	Microcontroller
		Project	SlimRIC-RB.PrjPcb		Sheet
Designed for WSA		Additional Info			2 / 2

© Swisstronics Contract Manufacturing AG 2025. All rights reserved.