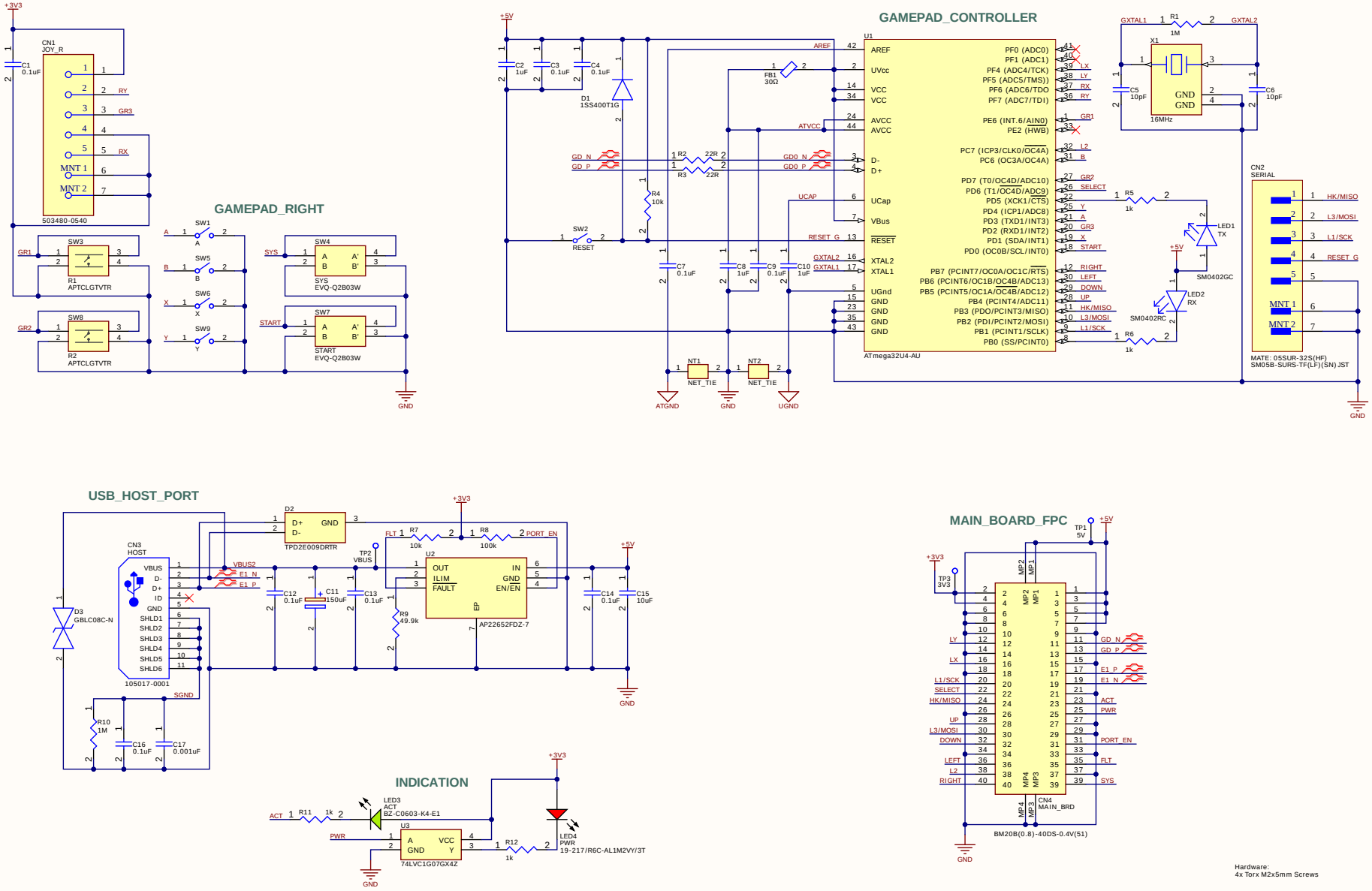

Title: RP5 Console Left Board		
Size: A3	Number	Revision v1 LSteen Designs LLC
Date: 2/28/2025		Sheet 1 of 1
File: C:\Users\...\RP5_Left_Board.SchDoc		Drawn By: LSteen

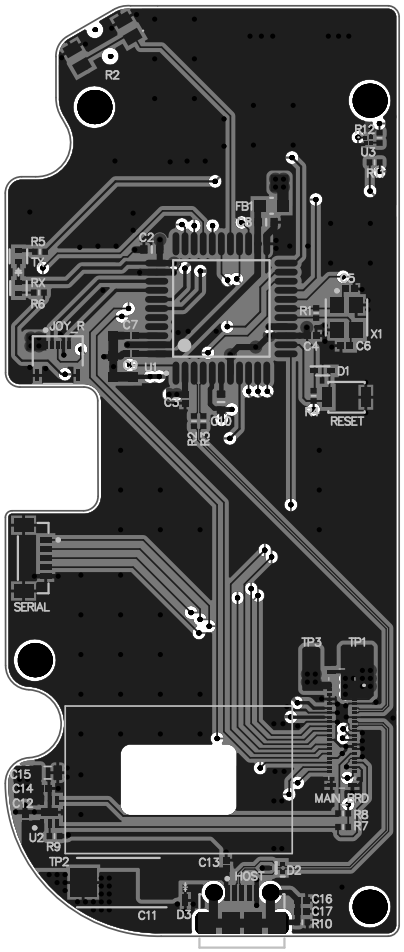
R2
R12
C1
U5
R3
FB1
C8
R5
C2
TX
RX
R6
JOY_R
C7
C3
R1
C4
X1
C6
D1
RESET
U1
U3
SERIAL
TP3
TP1
C15
C14
C12
U2
R9
TP2
C13
HOST
D2
C11
D3
C16
C17
R10
MAIN_PRO
R8
R7