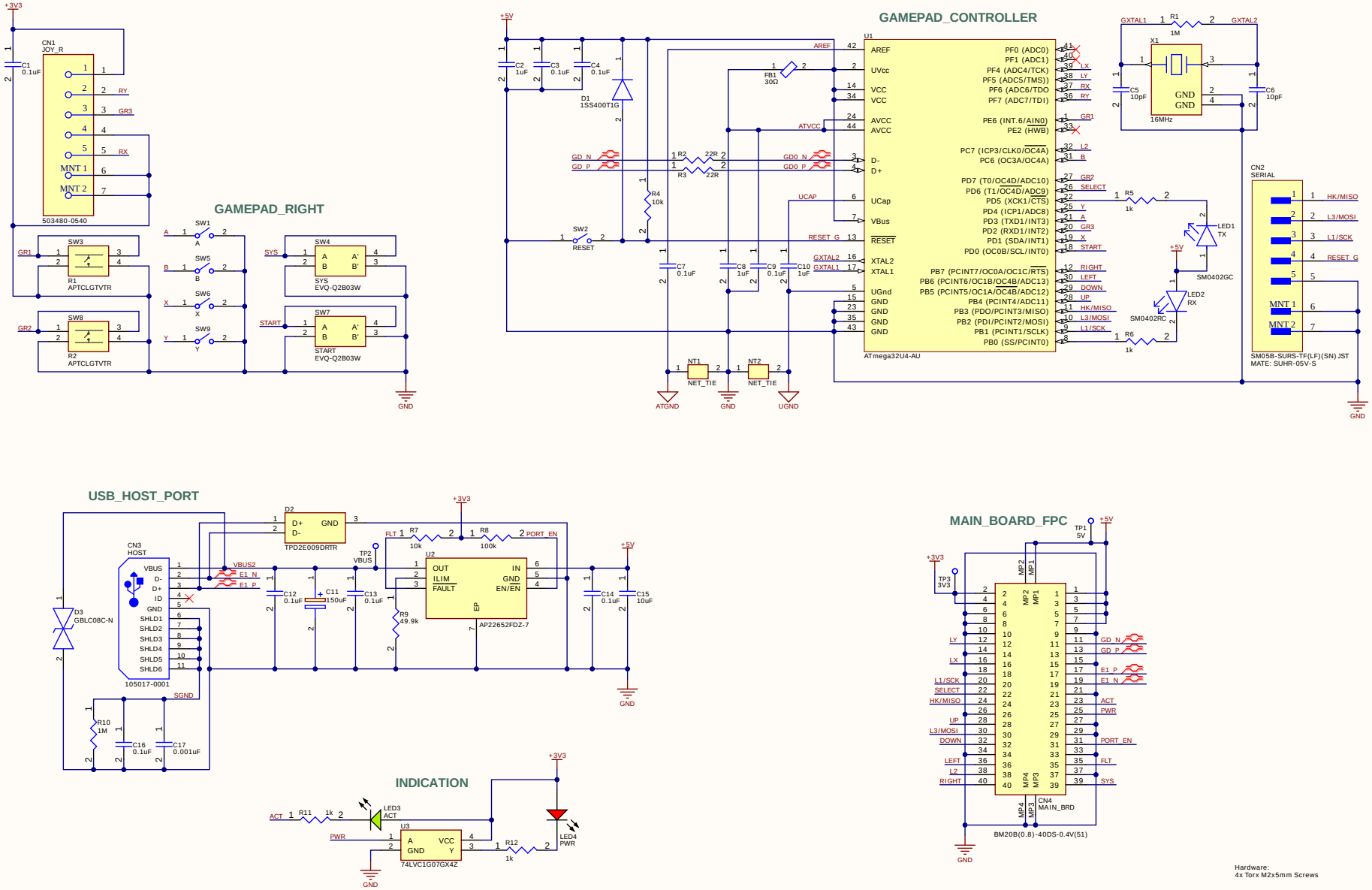


Hardware:
4x Torx M2x5mm Screws

| | | |
|---|---|---|
| Title: RP5 Console Left Board | | |
| Size: A3 | Number | Revision v1 LSteen Designs LLC |
| Date: 3/08/2025 | | Sheet 1 of 1 |
| File: C:\Users\...\RP5_Left_Board.SchDoc | | Drawn By: LSteen |

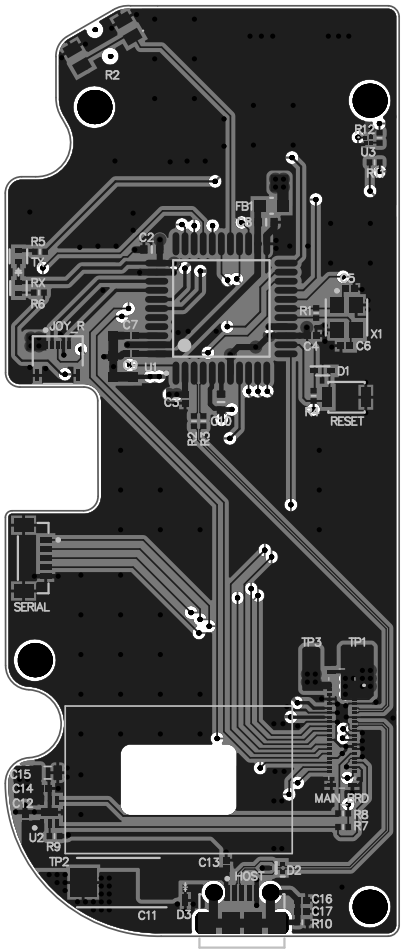
R2
R12
C1
U5
R3
FB1
C8
R5
C2
TX
RX
R6
C3
JOY_R
C7
R1
X1
C4
C6
U1
D1
C5
U3
RESET
SERIAL
TP3
TP1
C15
C14
C12
U2
R9
MAIN_PRO
R8
R7
TP2
C13
HOST
D2
C11
D3
C16
C17
R10