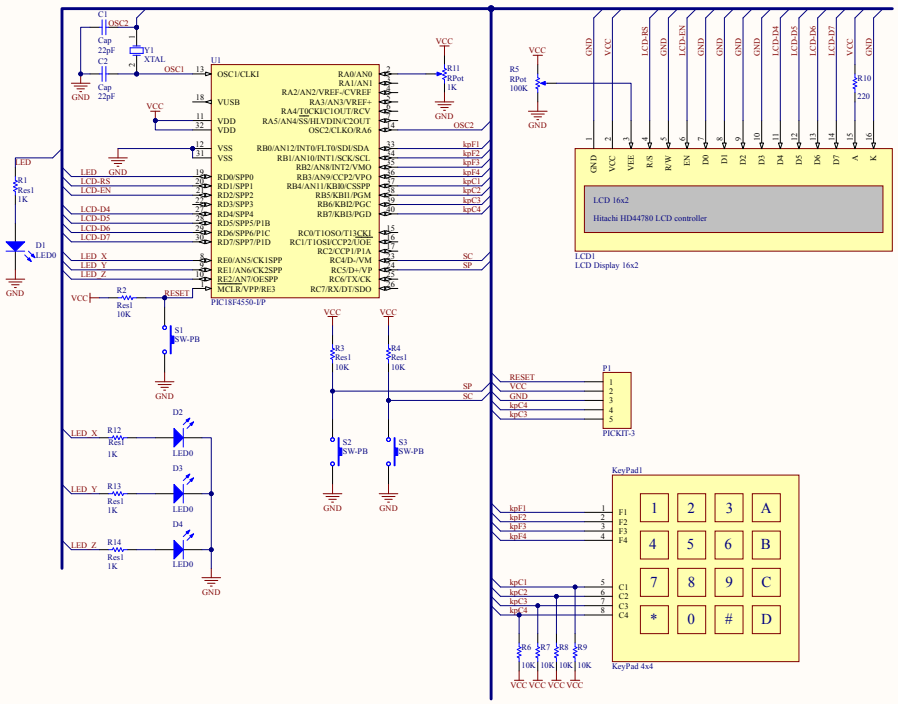

Title		
Size A2	Number	Revision
Date: 7/16/2024		Sheet of
File: H:\ALTIUM\...\Pract06_ADC.SchDoc		Drawn By: