R2D2-Wiring-Diagram--05-Sep-2026-10-31-PM

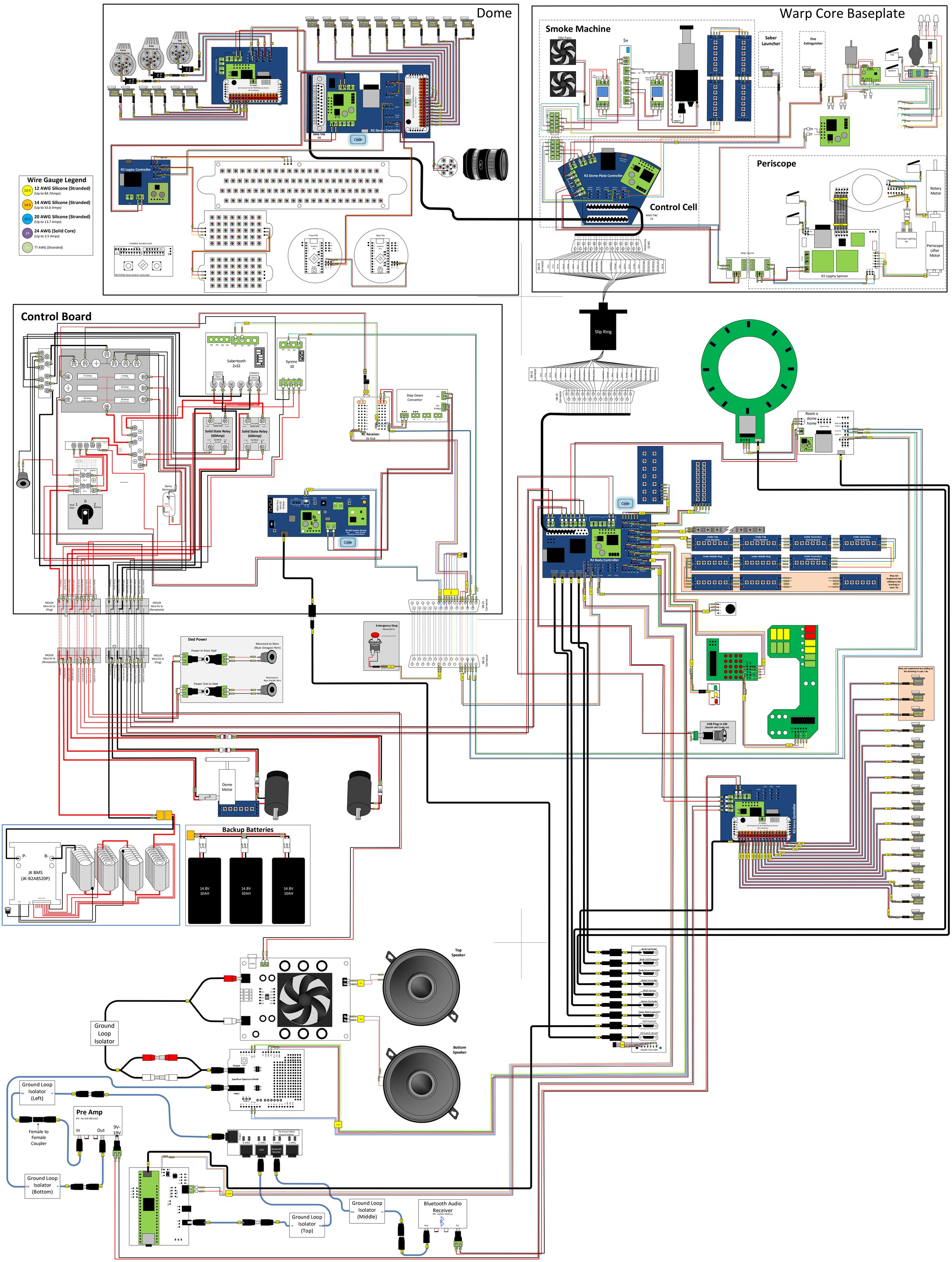

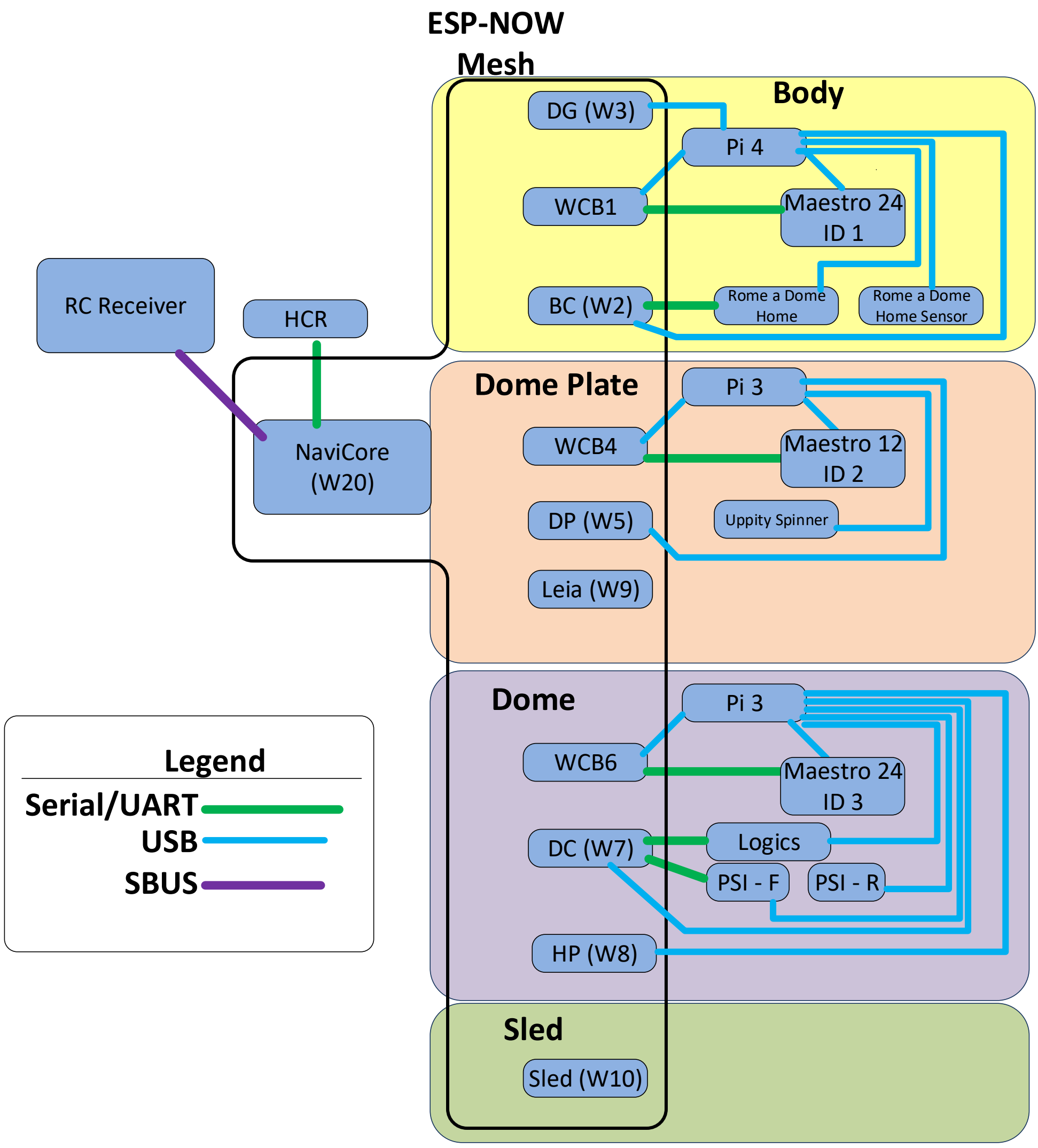
ESP-NOW Mesh
Body
DG (W3)
Pi 4
WCB1
Maestro 24 ID 1
BC (W2)
Rome a Dome Home
Rome a Dome Home Sensor
RC Receiver
HCR
NaviCore (W20)
Dome Plate
Pi 3
WCB4
Maestro 12 ID 2
DP (W5)
Uppity Spinner
Leia (W9)
Dome
Pi 3
WCB6
Maestro 24 ID 3
DC (W7)
Logics
PSI - F
PSI - R
HP (W8)
Sled
Sled (W10)
Legend
Serial/UART
USB
SBUS

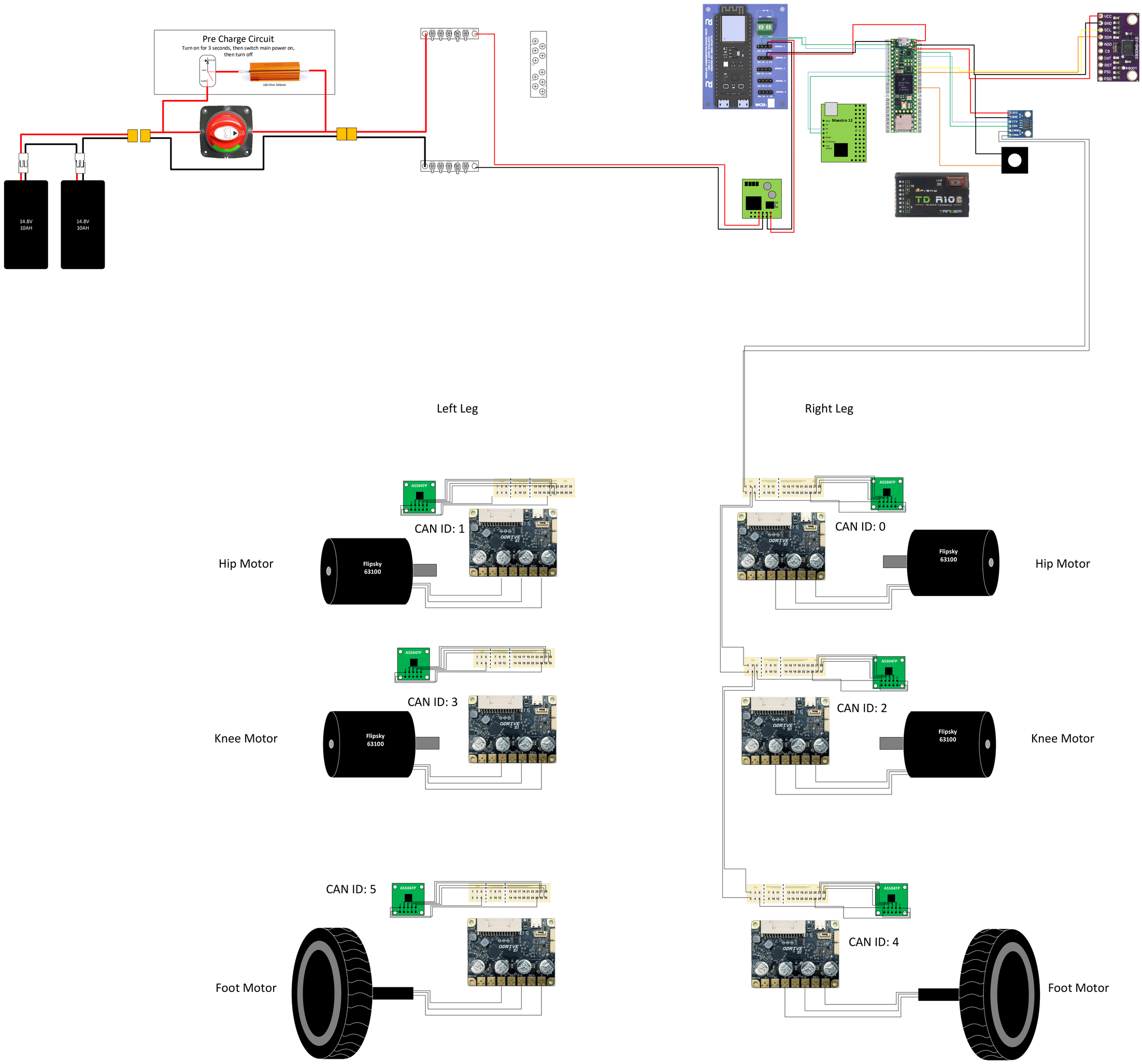
Pre Charge Circuit
Turn on for 3 seconds, then switch main power on, then turn off
100 Ohm 50Watt
14.8V 10AH
14.8V 10AH
Maestro 12
TD R10
Left Leg
Right Leg
CAN ID: 1
Hip Motor
Flipsky 63100
CAN ID: 0
Hip Motor
Flipsky 63100
CAN ID: 3
Knee Motor
Flipsky 63100
CAN ID: 2
Knee Motor
Flipsky 63100
CAN ID: 5
Foot Motor
CAN ID: 4
Foot Motor
AS5047P
ODRIVE S1

C3P0 Servo Layout

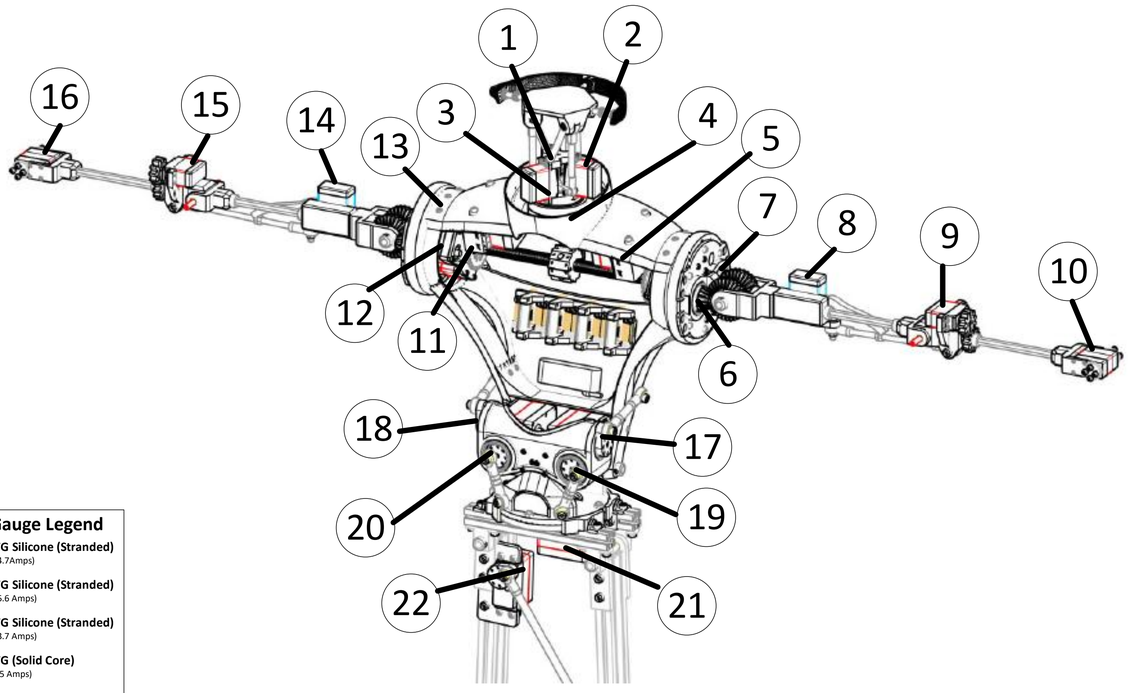

Wire Gauge Legend

- 12-S — **12 AWG Silicone (Stranded)** (Up to 84.7Amps)
- 14-S — **14 AWG Silicone (Stranded)** (Up to 55.6 Amps)
- 20-S — **20 AWG Silicone (Stranded)** (Up to 13.7 Amps)
- 24 — **24 AWG (Solid Core)** (Up to 3.5 Amps)
- ?? — ?? AWG (Stranded)

C3P0

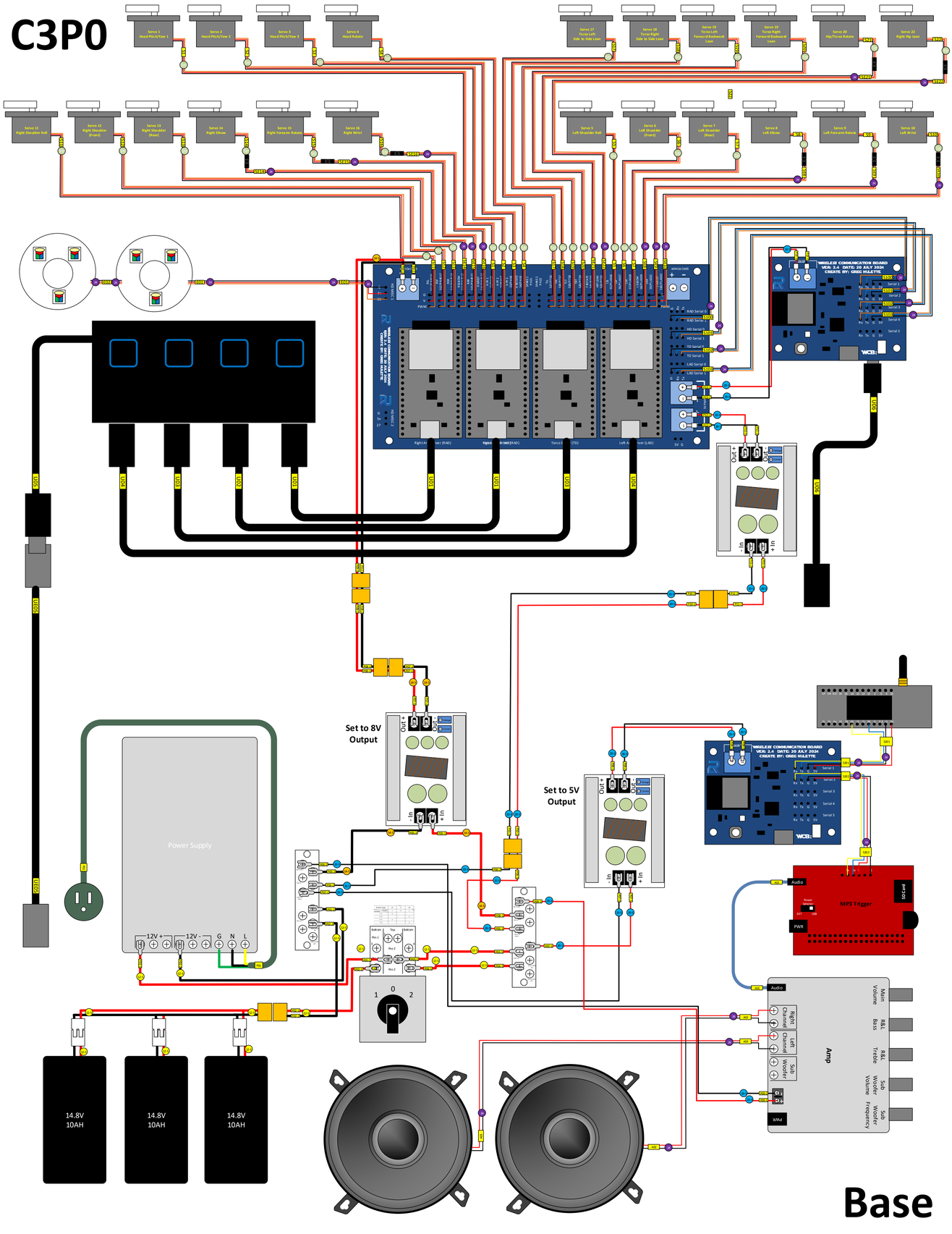

Base

Needs to be verified and Updated

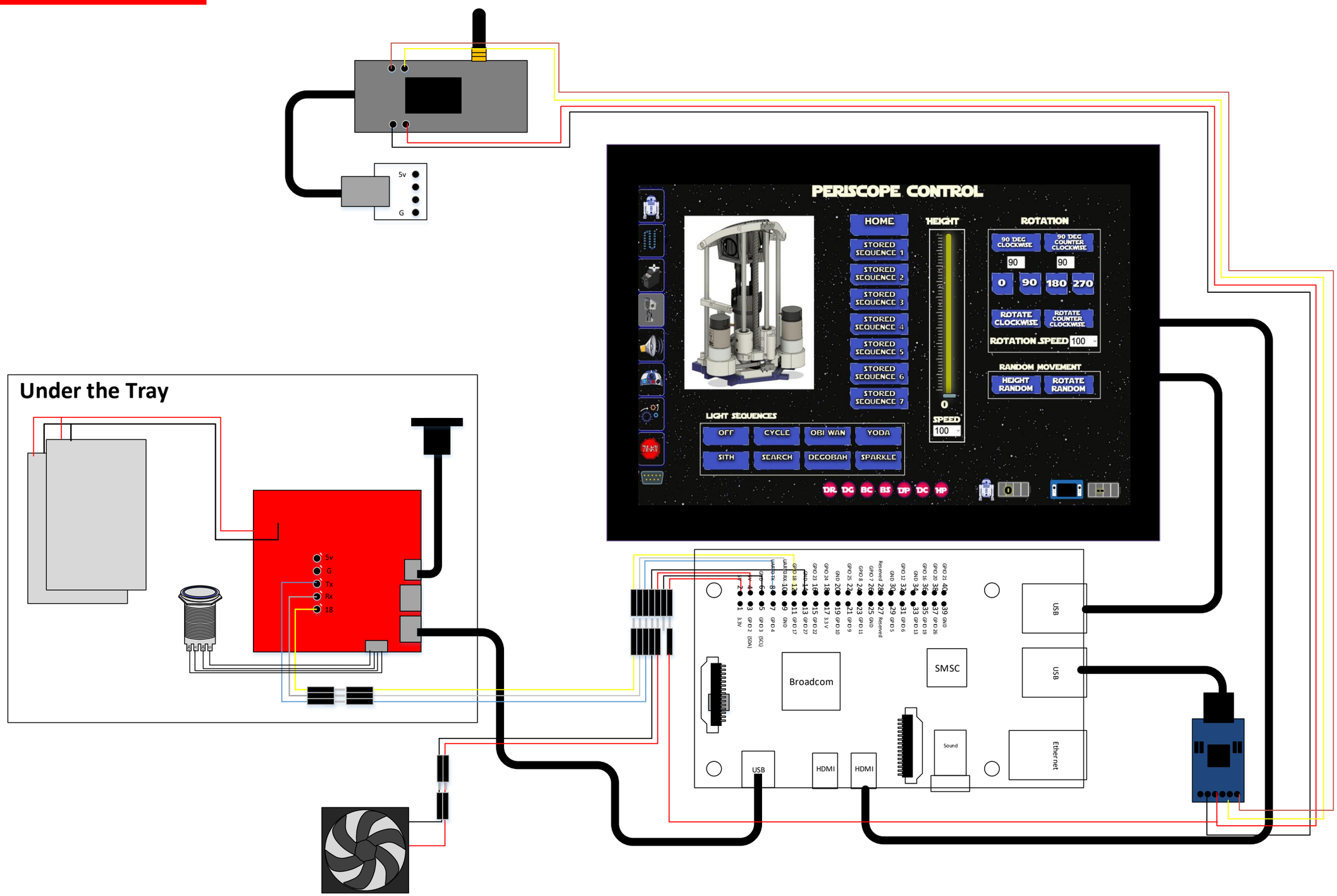

Needs a lot of work

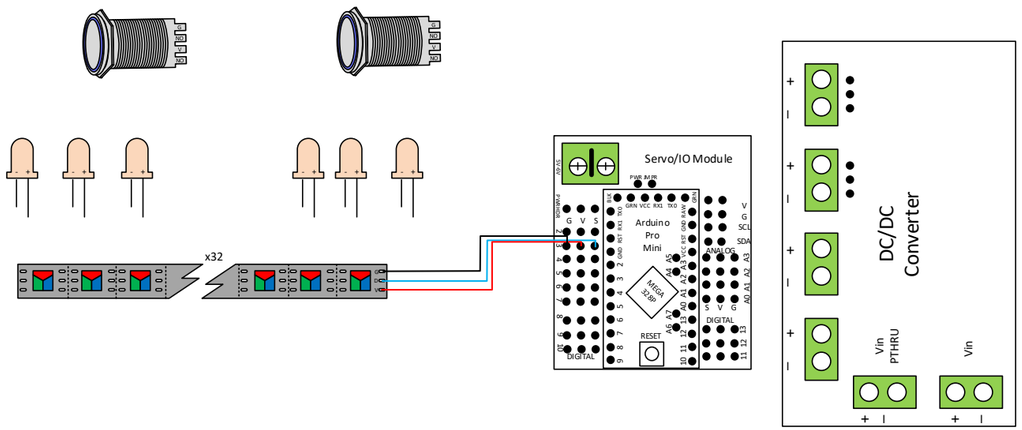

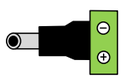

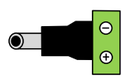

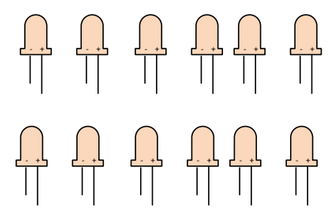

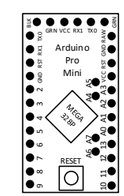

Communication Layers

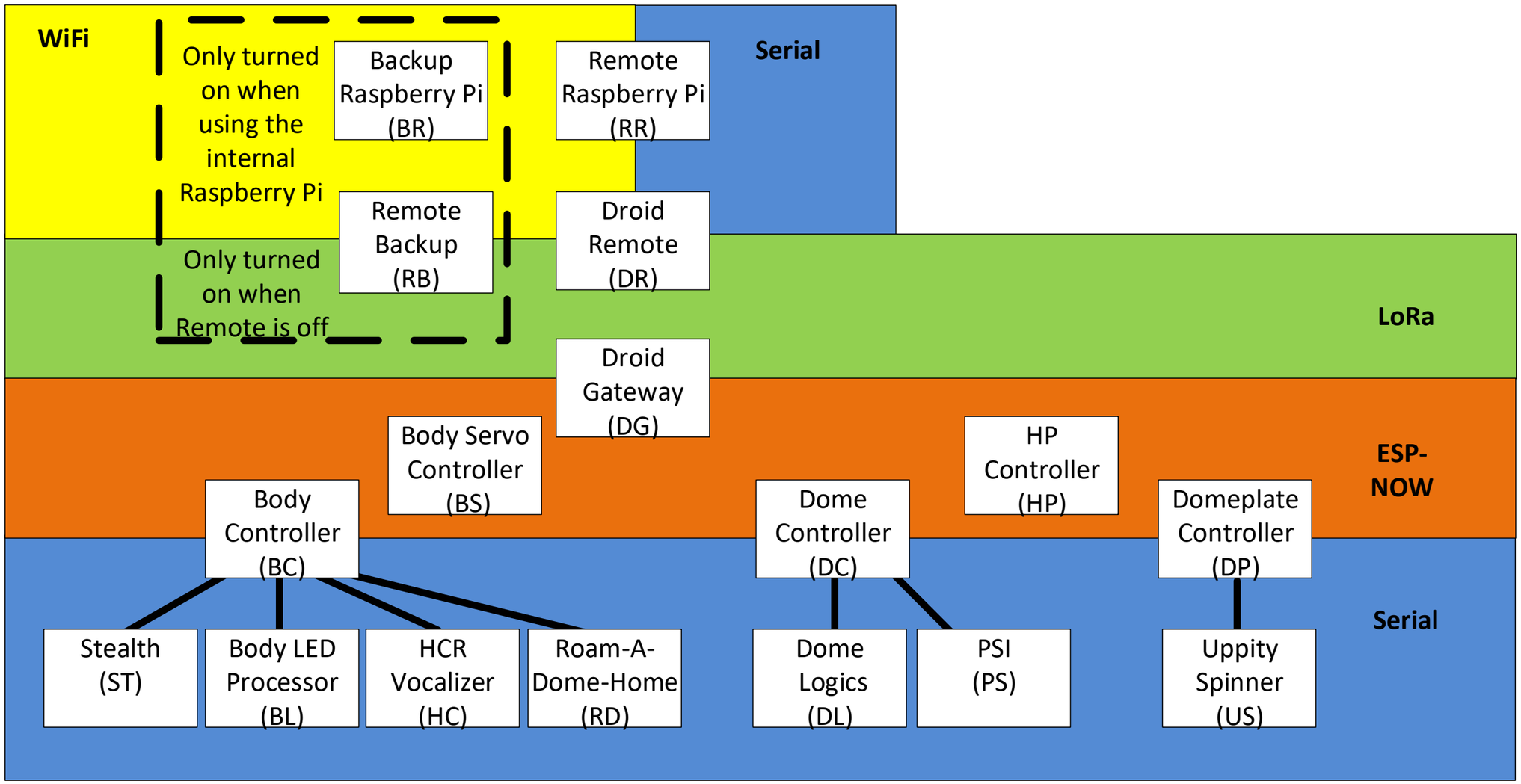

SF: Maint Lights
Down: Off
Forward: On
SE: Function Select
DOWN
SB: RADH Mode
Rear: Disabled
Middle: Enabled
Up: Enabled
SC: Light Mode
Down: Normal
Middle: All On
Up: All Off
SH:
SG: Slow Drive
Down: Normal
Middle: Slow Mode
Up:
SA: Drive Mode
Down: Standby
Middle: Active
Up: Dome Only
HCR Vocalizer Volume
HCR WAV Volume
SD: Muse
Down: Muse On
Middle: Muse Off
Up: Muse Off
S1
S2
Harlem Shake
Periscope Seq 4
Panel Wave
Short Circuit
T3
T2
All Close Periscope Down
Wave Arm
Drawer Wave
Door Easing
Fast Wave
Display
Panel Wave 2
All Open
T4
T5
T6
T1
Mute HCR
Happy
Mad
Sad
Scared
Fart
SYS
DISP
RTN
DUAL BAND
900M/2.4G

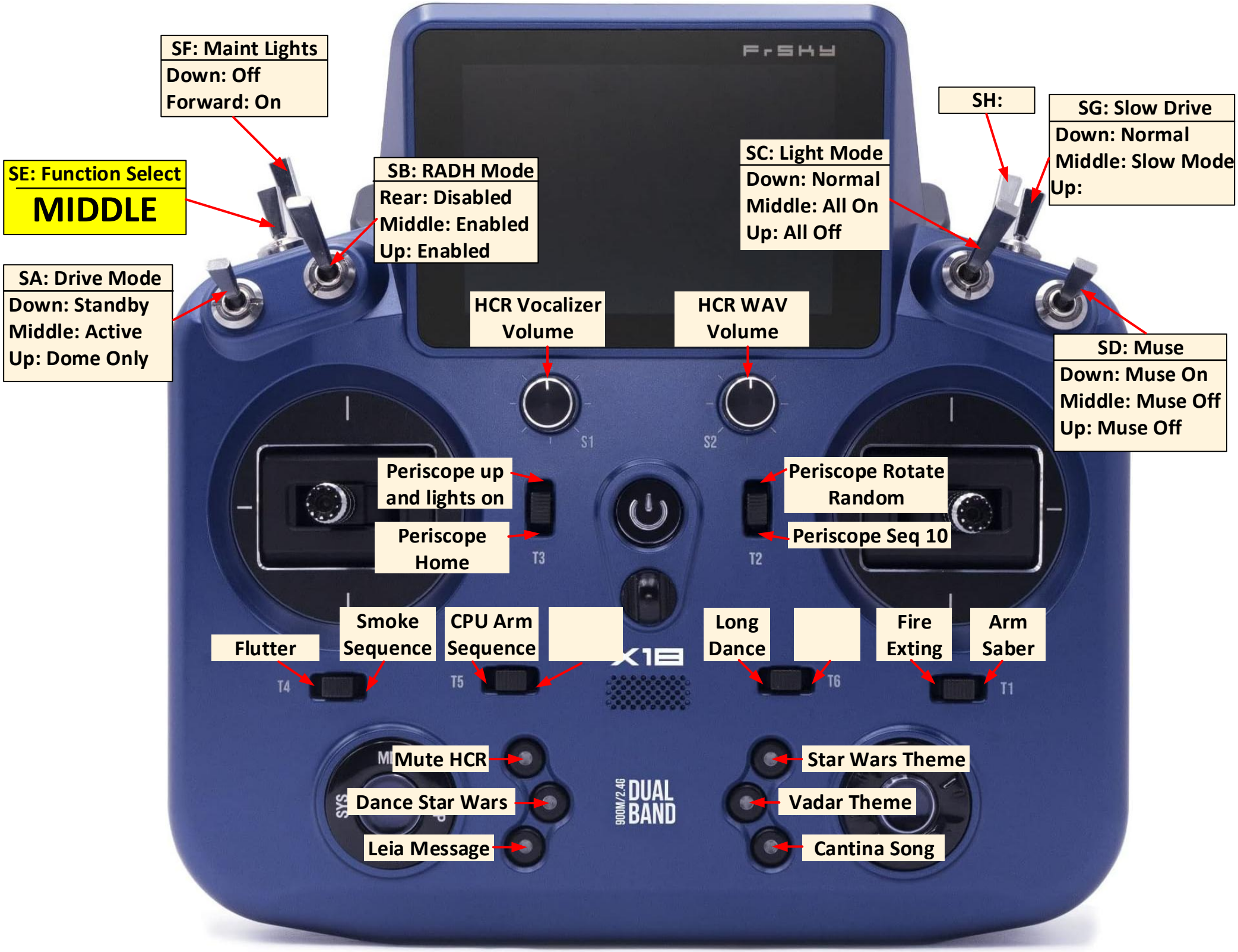
SF: Maint Lights
Down: Off
Forward: On
SE: Function Select
MIDDLE
SB: RADH Mode
Rear: Disabled
Middle: Enabled
Up: Enabled
SA: Drive Mode
Down: Standby
Middle: Active
Up: Dome Only
SC: Light Mode
Down: Normal
Middle: All On
Up: All Off
SH:
SG: Slow Drive
Down: Normal
Middle: Slow Mode
Up:
SD: Muse
Down: Muse On
Middle: Muse Off
Up: Muse Off
HCR Vocalizer Volume
HCR WAV Volume
S1
S2
Periscope up and lights on
Periscope Home
T3
Periscope Rotate Random
Periscope Seq 10
T2
Flutter
T4
Smoke Sequence
CPU Arm Sequence
T5
Long Dance
T6
Fire Exting
Arm Saber
T1
Mute HCR
Dance Star Wars
Leia Message
Star Wars Theme
Vadar Theme
Cantina Song
FrSky
X18
900M/2.4G DUAL BAND

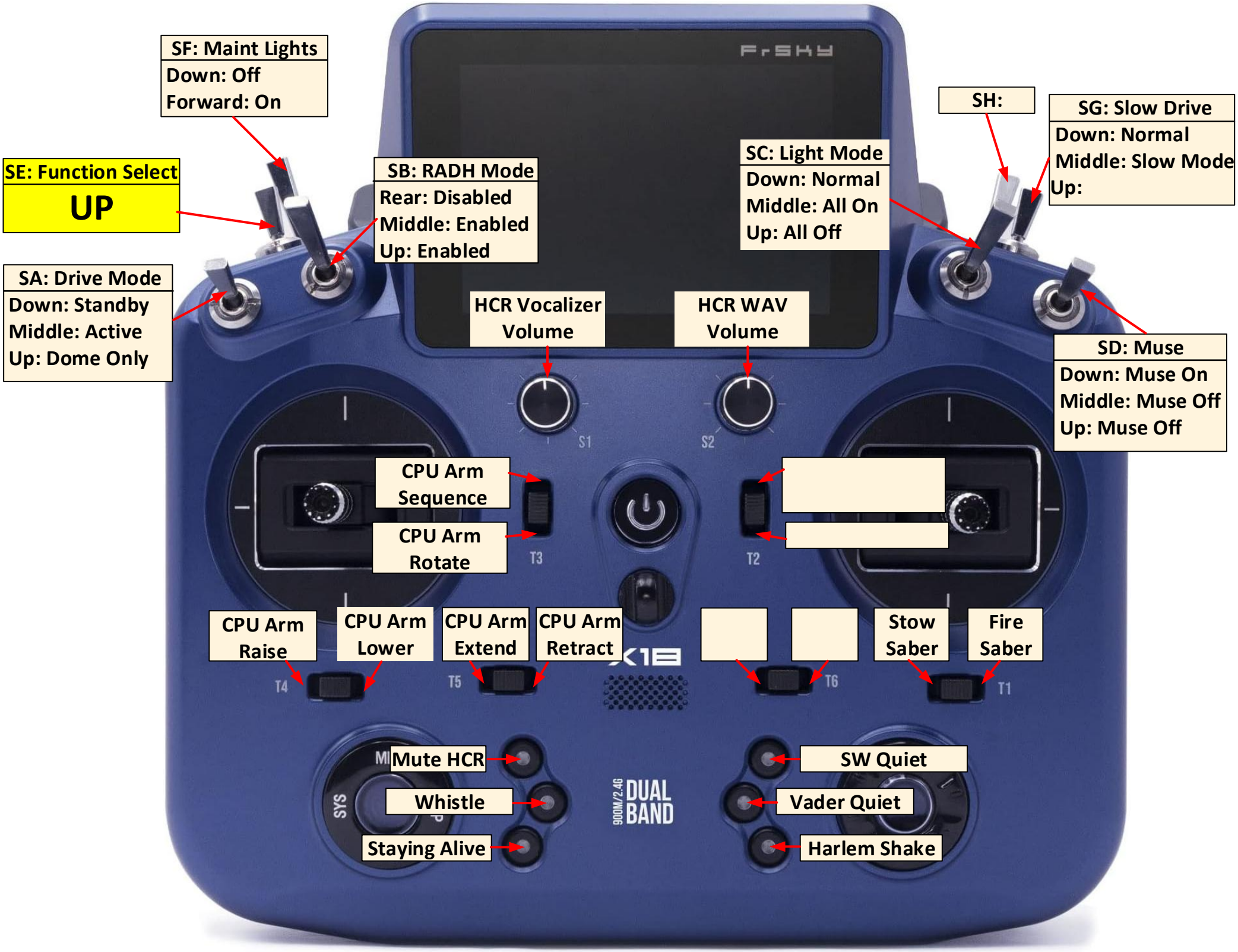
SF: Maint Lights
Down: Off
Forward: On
SE: Function Select
UP
SB: RADH Mode
Rear: Disabled
Middle: Enabled
Up: Enabled
SA: Drive Mode
Down: Standby
Middle: Active
Up: Dome Only
SC: Light Mode
Down: Normal
Middle: All On
Up: All Off
SH:
SG: Slow Drive
Down: Normal
Middle: Slow Mode
Up:
SD: Muse
Down: Muse On
Middle: Muse Off
Up: Muse Off
HCR Vocalizer Volume
HCR WAV Volume
S1
S2
CPU Arm Sequence
CPU Arm Rotate
T3
T2
CPU Arm Raise
CPU Arm Lower
CPU Arm Extend
CPU Arm Retract
Stow Saber
Fire Saber
T4
T5
T6
T1
Mute HCR
Whistle
Staying Alive
SW Quiet
Vader Quiet
Harlem Shake
SYS
900M/2.4G DUAL BAND

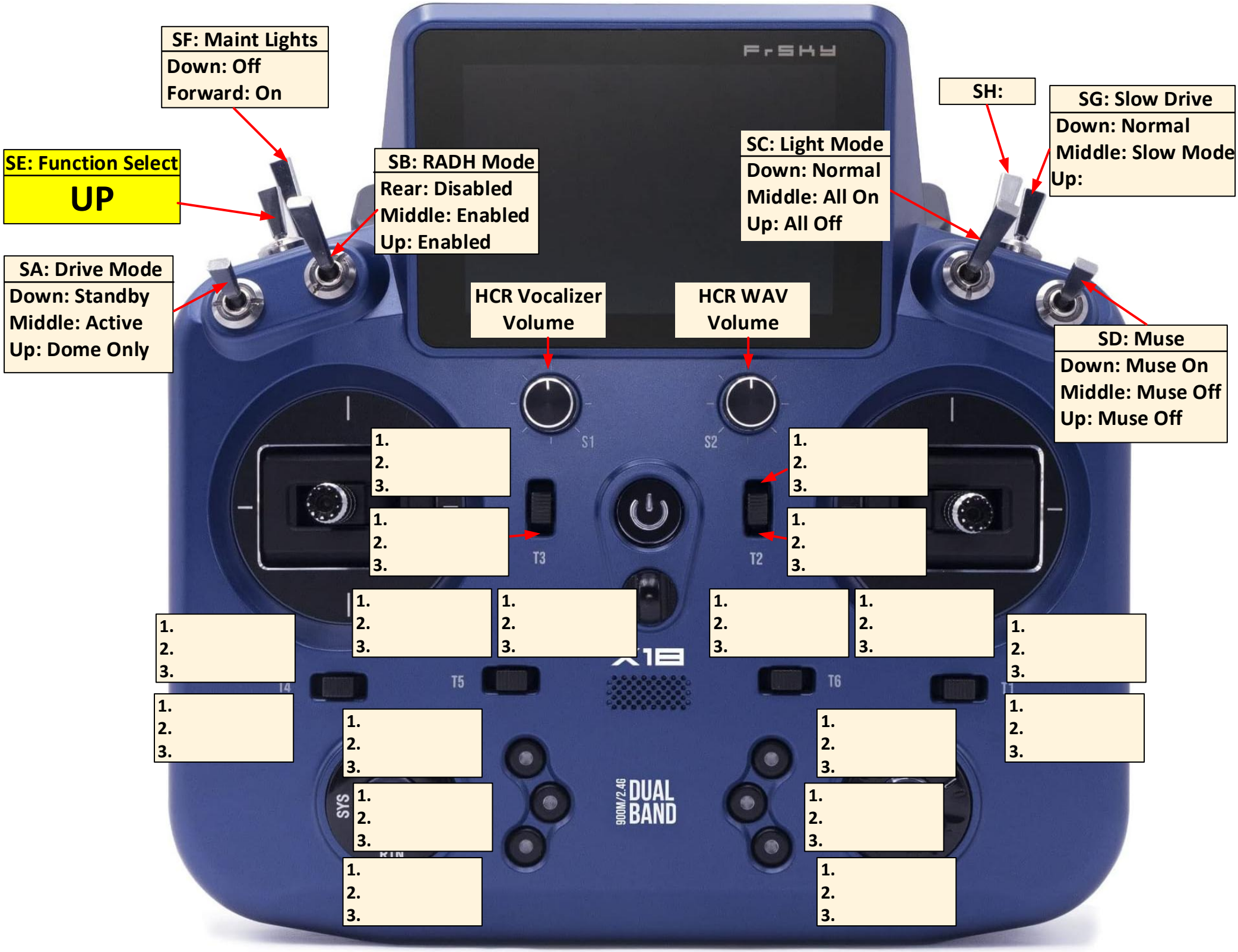
SF: Maint Lights
Down: Off
Forward: On
SE: Function Select
UP
SB: RADH Mode
Rear: Disabled
Middle: Enabled
Up: Enabled
SA: Drive Mode
Down: Standby
Middle: Active
Up: Dome Only
HCR Vocalizer Volume
HCR WAV Volume
SC: Light Mode
Down: Normal
Middle: All On
Up: All Off
SH:
SG: Slow Drive
Down: Normal
Middle: Slow Mode
Up:
SD: Muse
Down: Muse On
Middle: Muse Off
Up: Muse Off
S1
S2
T3
T2
T5
T6
T4
T1
SYS
900M/2.4G DUAL BAND
1.
2.
3.

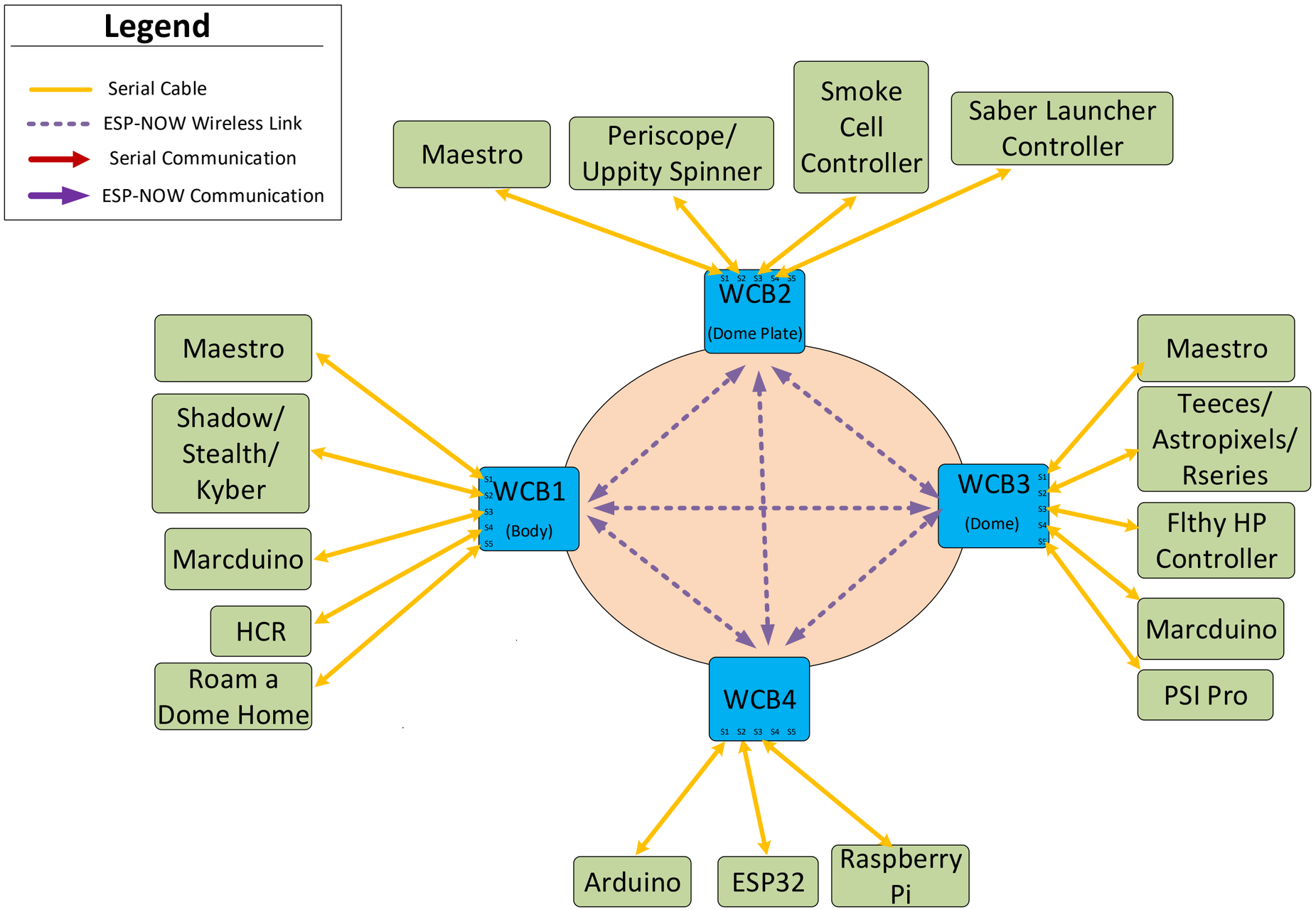
Legend
Serial Cable
ESP-NOW Wireless Link
Serial Communication
ESP-NOW Communication
Maestro
Periscope/ Uppity Spinner
Smoke Cell Controller
Saber Launcher Controller
WCB2
(Dome Plate)
Maestro
Shadow/ Stealth/ Kyber
Marcduino
HCR
Roam a Dome Home
WCB1
(Body)
WCB3
(Dome)
Maestro
Teeces/ Astropixels/ Rseries
Flthy HP Controller
Marcduino
PSI Pro
WCB4
Arduino
ESP32
Raspberry Pi

Test

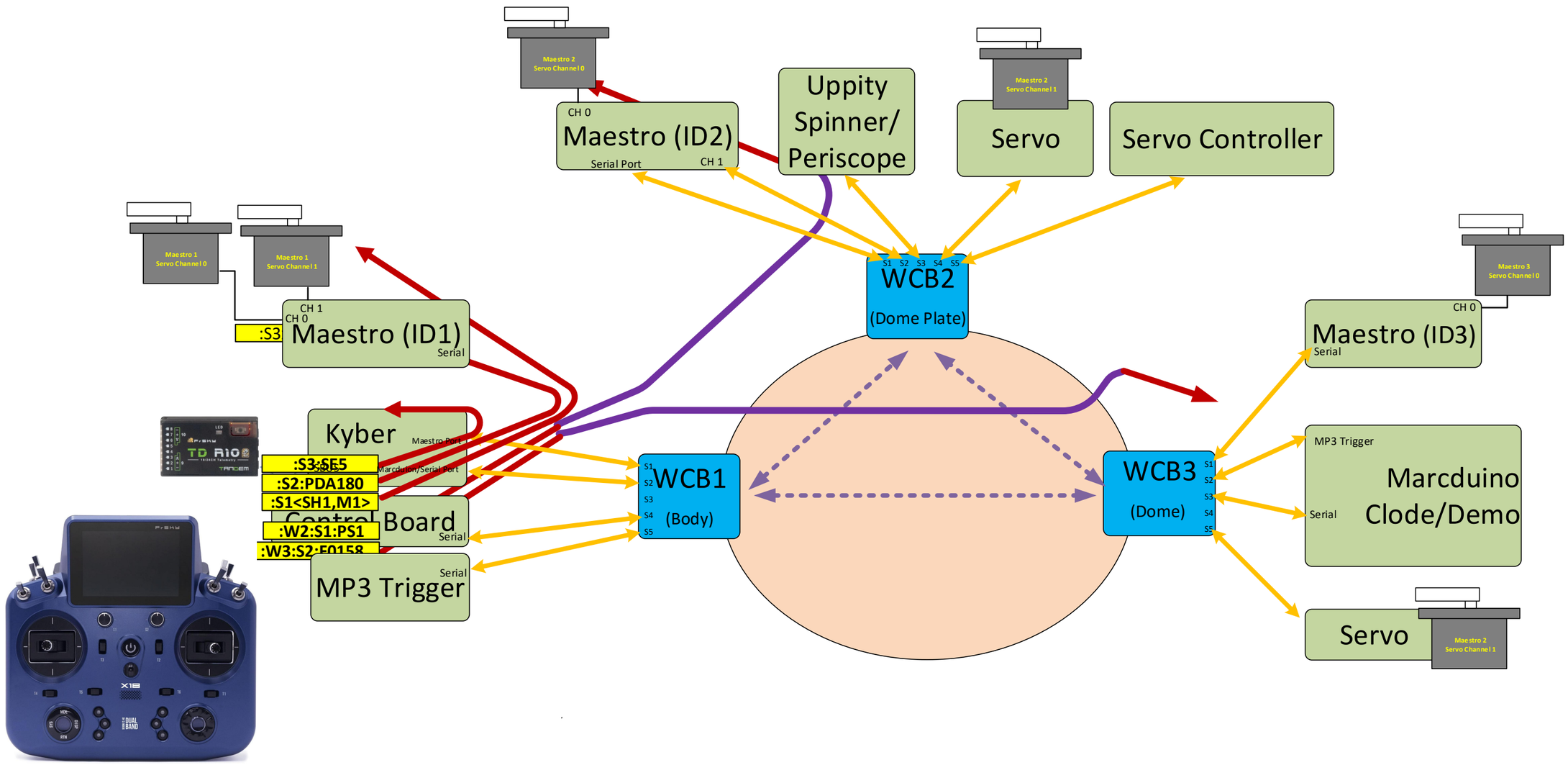
Maestro 2
Servo Channel 0
CH 0
Maestro (ID2)
Serial Port
CH 1
Uppity
Spinner/
Periscope
Maestro 2
Servo Channel 1
Servo
Servo Controller
Maestro 1
Servo Channel 0
Maestro 1
Servo Channel 1
CH 1
CH 0
:S3
Maestro (ID1)
Serial
S1 S2 S3 S4 S5
WCB2
(Dome Plate)
Maestro 3
Servo Channel 0
CH 0
Maestro (ID3)
Serial
Kyber
Maestro Port
:S3:SE5
:S2:PDA180
:S1<SH1,M1>
Marcduino/Serial Port
Control Board
Serial
:W2:S1:PS1
:W3:S2:F0158
Serial
MP3 Trigger
S1
S2
S3
S4
S5
WCB1
(Body)
WCB3
(Dome)
MP3 Trigger
Serial
Marcduino
Clode/Demo
Servo
Maestro 2
Servo Channel 1

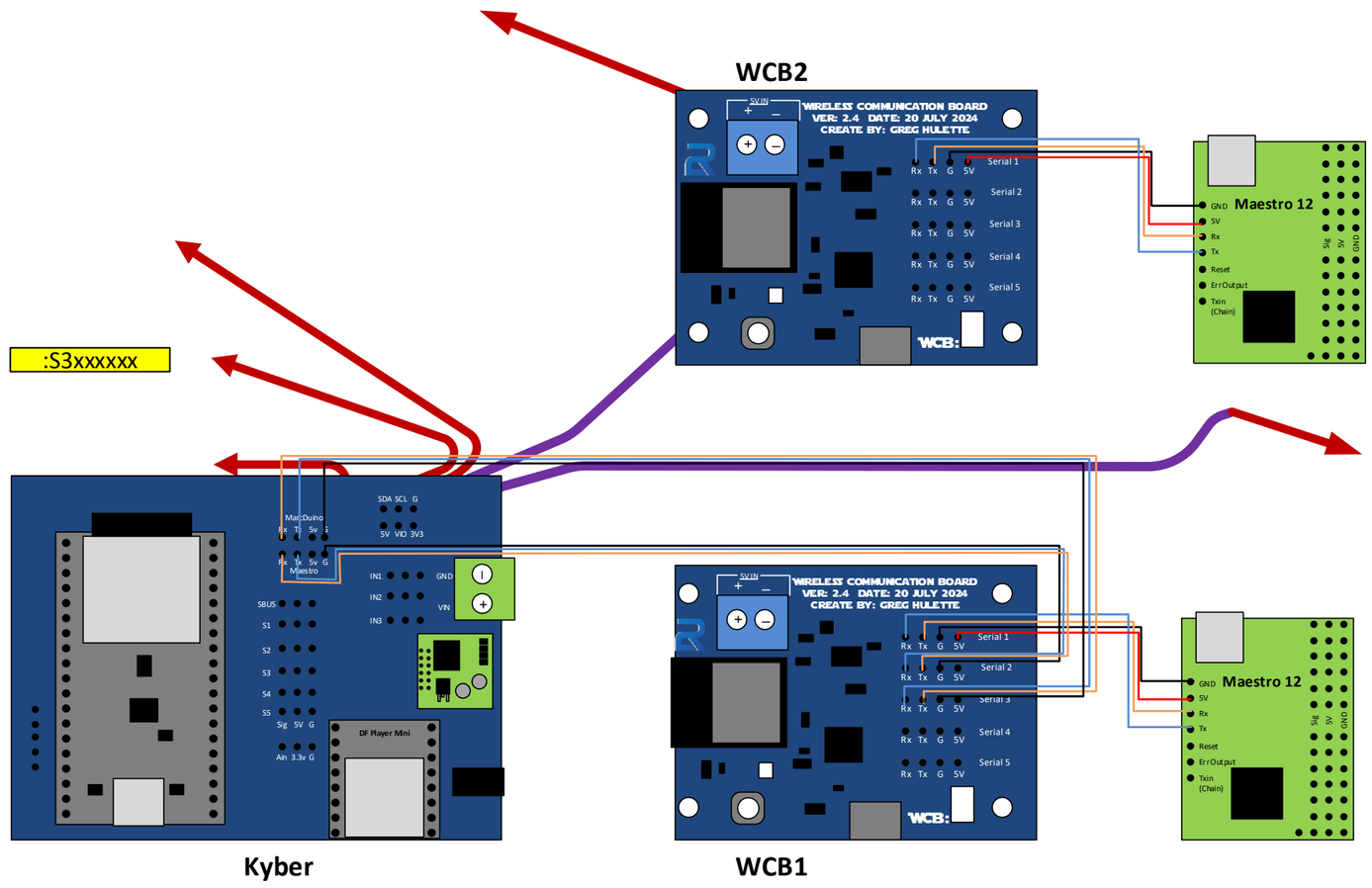
WCB2
WIRELESS COMMUNICATION BOARD
VER: 2.4 DATE: 20 JULY 2024
CREATE BY: GREG HULETTE
5VIN
Serial 1
Serial 2
Serial 3
Serial 4
Serial 5
Rx Tx G 5V
Maestro 12
GND
5V
Rx
Tx
Reset
ErrOutput
Txin
(Chain)
Sig
5V
GND
:S3xxxxxx
MarcDuino
Maestro
SDA SCL G
5V VIO 3V3
SBUS
S1
S2
S3
S4
S5
Sig 5V G
Ain 3.3v G
IN1
IN2
IN3
GND
VIN
DF Player Mini
Kyber
WCB1

Option 1
(Passthrough)

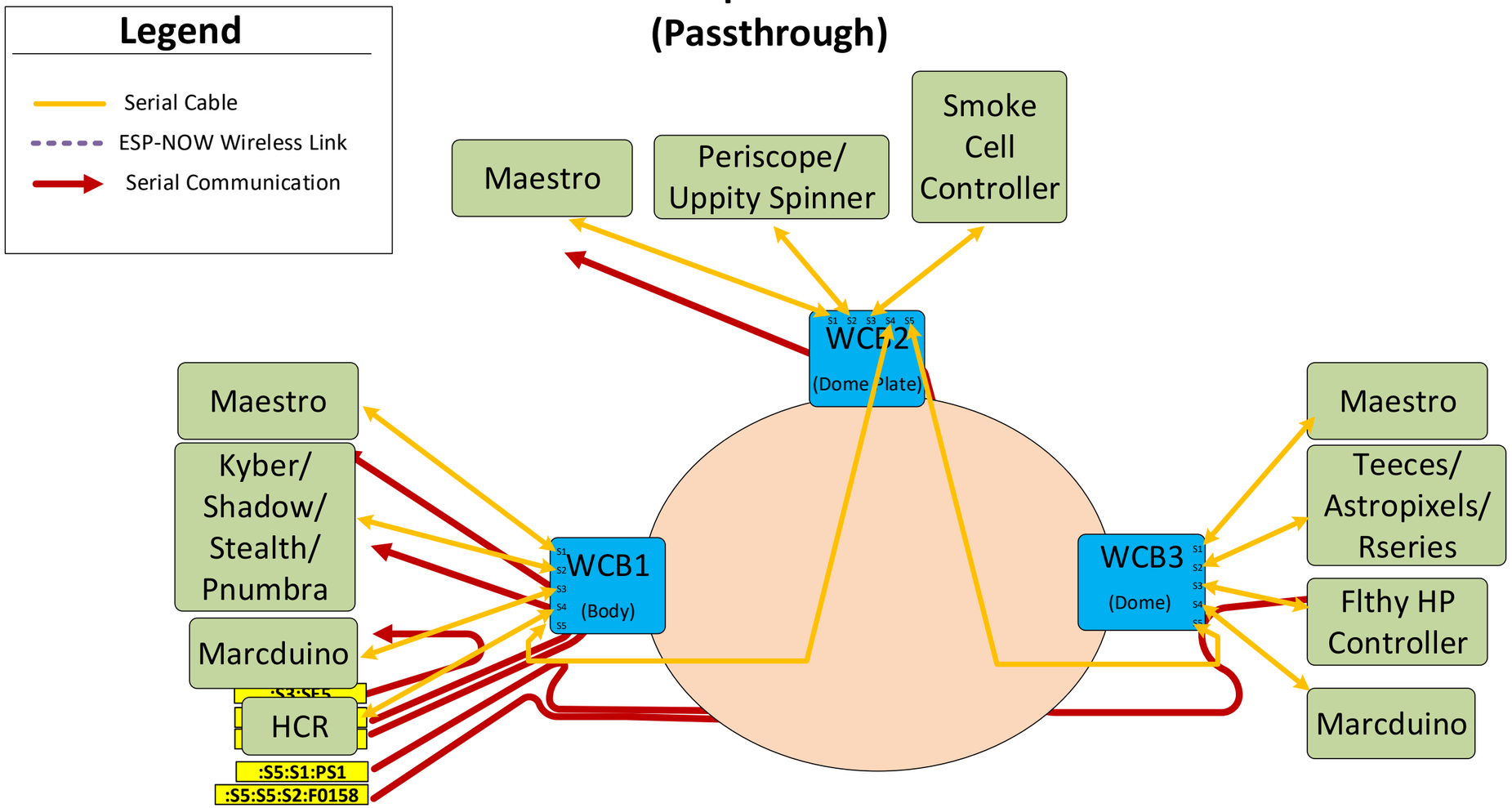

Option 2
(Hub and Spoke)

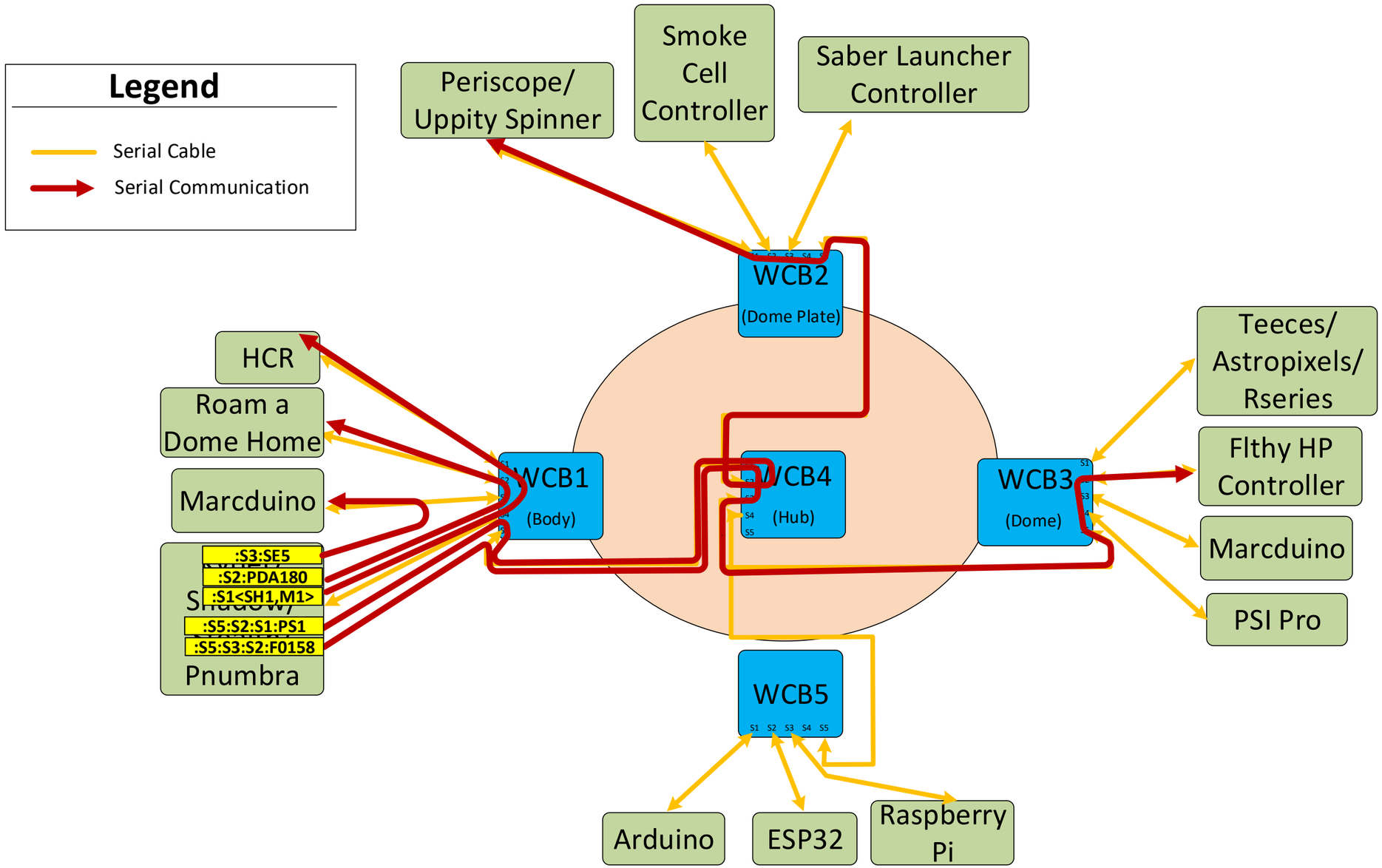

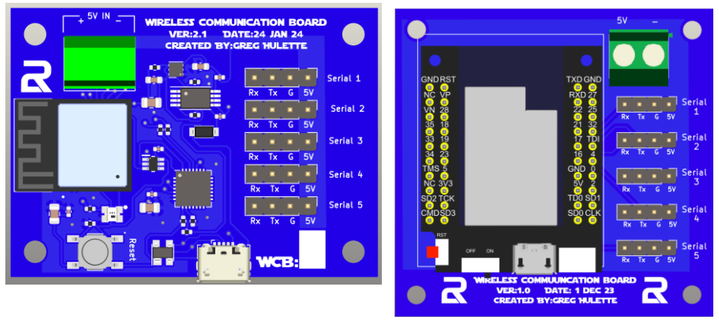
WIRELESS COMMUNICATION BOARD
VER:2.1 DATE:24 JAN 24
CREATED BY:GREG HULETTE
Serial 1
Serial 2
Serial 3
Serial 4
Serial 5
WIRELESS COMMUNICATION BOARD
VER:1.0 DATE: 1 DEC 23
CREATED BY:GREG HULETTE

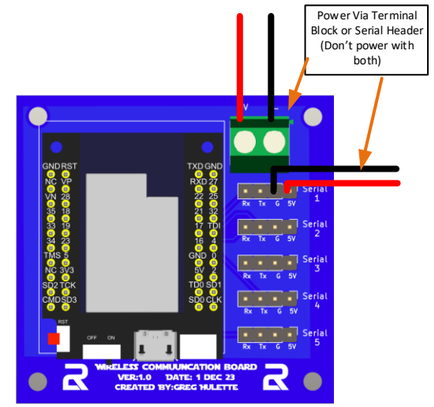
Power Via Terminal Block or Serial Header (Don't power with both)
WIRELESS COMMUNICATION BOARD
VER:1.0 DATE: 1 DEC 23
CREATED BY:GREG HULETTE

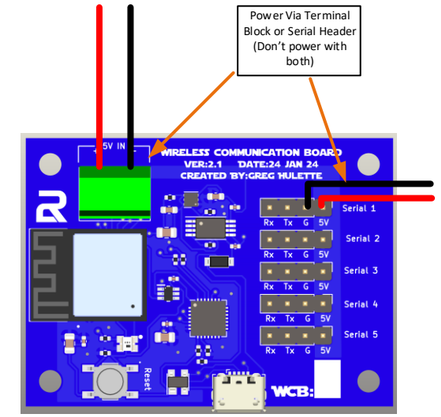
Power Via Terminal Block or Serial Header (Don't power with both)
WIRELESS COMMUNICATION BOARD
VER:2.1 DATE:24 JAN 24
CREATED BY:GREG HULETTE

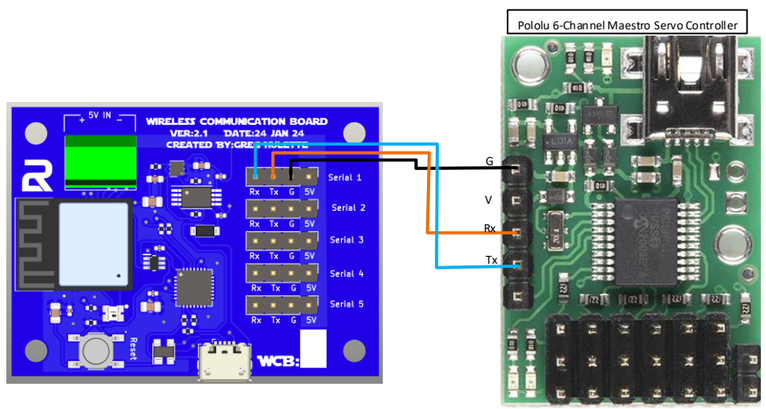
Pololu 6-Channel Maestro Servo Controller
WIRELESS COMMUNICATION BOARD
VER:2.1 DATE:24 JAN 24
G
V
Rx
Tx

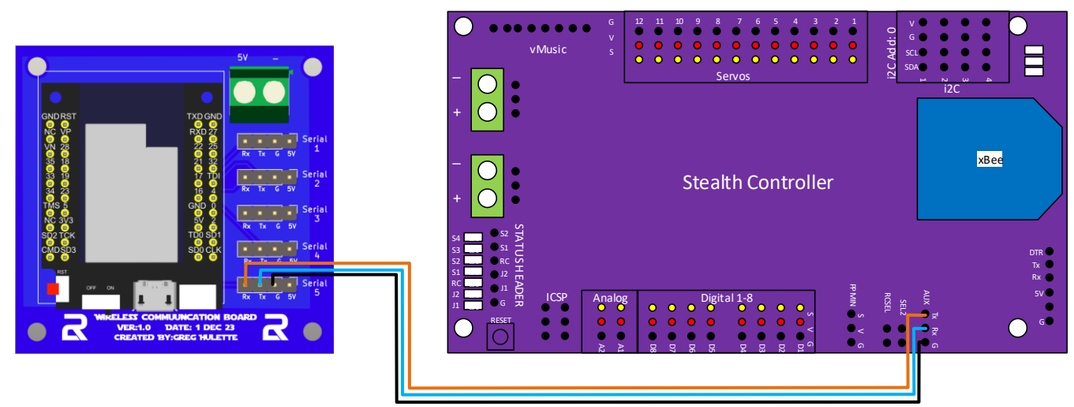
WIRELESS COMMUNICATION BOARD
VER:1.0 DATE: 1 DEC 23
CREATED BY:GREG HULETTE
vMusic
Servos
i2C
xBee
Stealth Controller
STATUS HEADER
ICSP
Analog
Digital 1-8

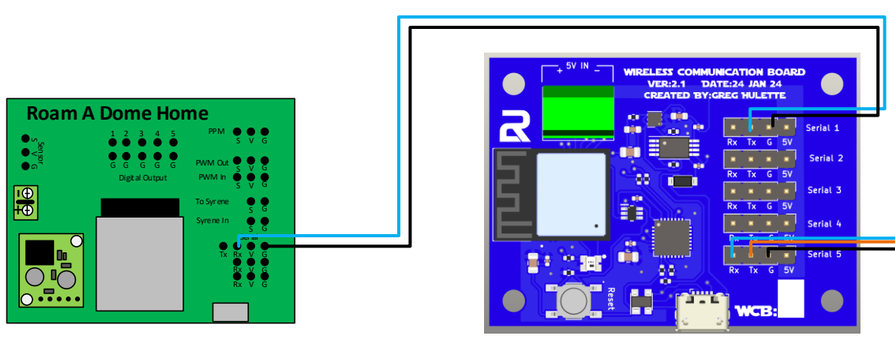
Roam A Dome Home
WIRELESS COMMUNICATION BOARD
VER:2.1 DATE:24 JAN 24
CREATED BY:GREG HULETTE

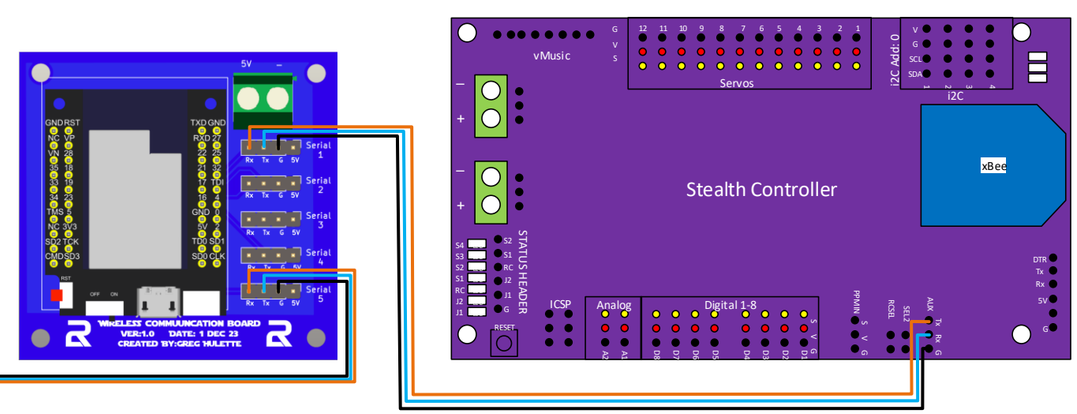
WIRELESS COMMUNICATION BOARD
VER:1.0 DATE: 1 DEC 23
CREATED BY:GREG HULETTE
vMusic
Servos
i2C
xBee
Stealth Controller
STATUS HEADER
ICSP
Analog
Digital 1-8

Needs to be verified and Updated

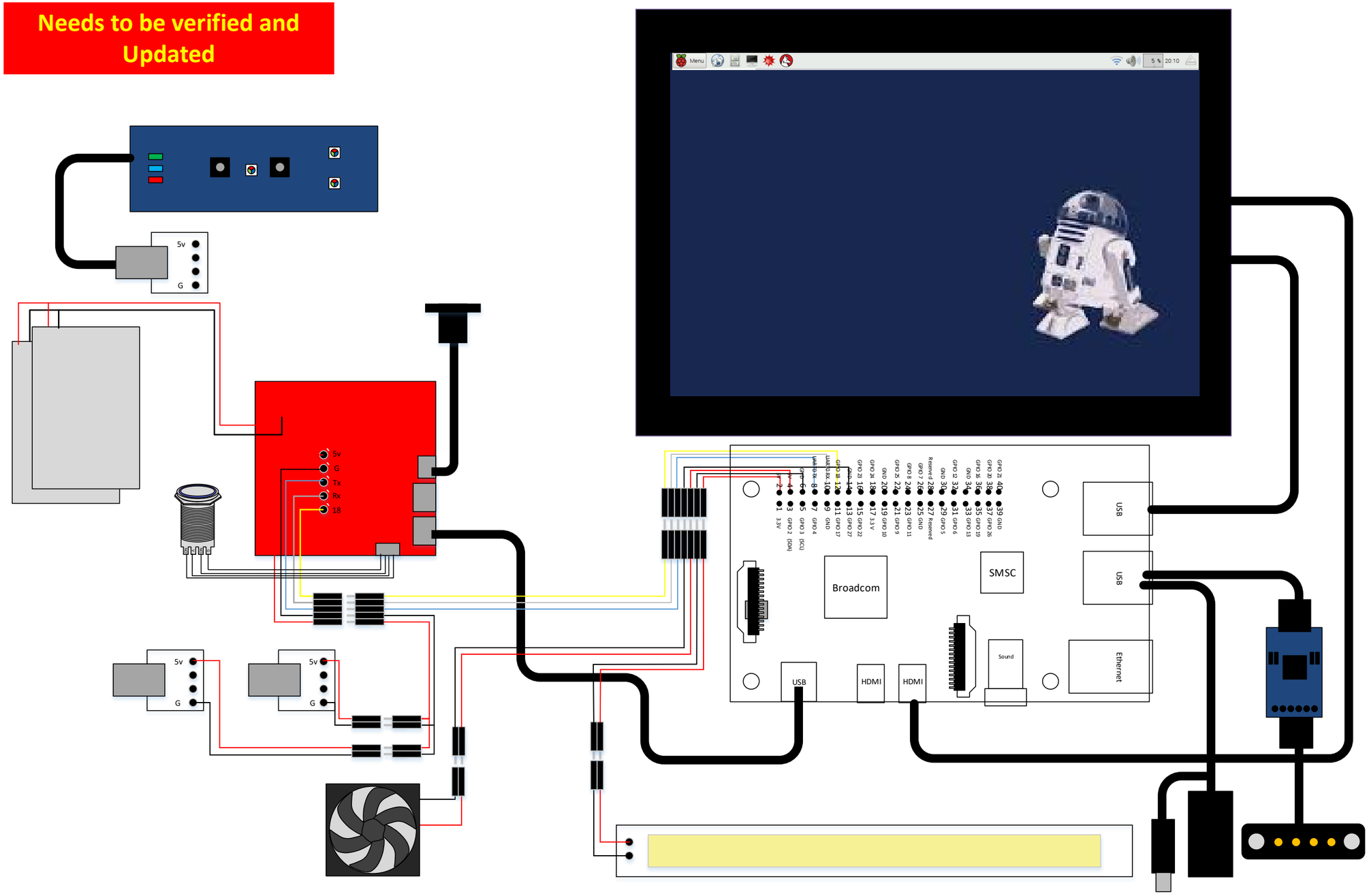

Back to Quick Reference Tab

Action	Gesture	Stealth Config.txt	Body Servo Expander I2C = 9	Body Arduino Pro Mini I2C = 8	Body Arduino Mega I2C = 7	Dome Expander I2C = 10	Flthy HP I2C = 25	HP Servo Board I2C = 65	Teeces (Serial)	Teeces (Serial)
			Space Holer							

Actions	Details	Actions	Details	Actions	Details	Actions	Details
?? 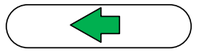 Left		**Normal Operations** 1 – Opens the Dome panels 2 – Changes the Camera Lens LED Colors to a random color each time it closes a few panels 3 – Changes the HPs to a random color each time it runs through a cycle of opening and closing 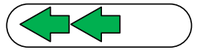 Left, Left	Double Click to get To the Details Page	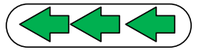 Left, Left	Double Click to get To the Details Page	**Open All Doors** 1 – Opens all doors 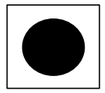 Button 1	
?? 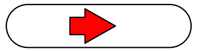 Right	g=656,4,10,5	**Panel Wave** 1 – Opens the Dome 2 – Changes the Camaera Lens LED Colors to a random color each time it closes a few panels 3 – Sets the HP's to random pulse 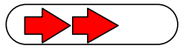 Right, Right	Double Click to get To the Details Page	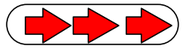 Right, Right, Right		**Close All Doors** 1 – Opens all doors 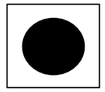 Button 2	
?? 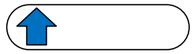 Up	g=656,4,10,5	**Panel Wave Fast** 1 – Opens the Dome 2 – Changes the Camaera Lens LED Colors to a random color each time it closes a few panels 3 – Sets the HP's to random pulse Up, Up	Double Click to get To the Details Page	Up, Up, Up		**Open All Doors** 1 – Opens all doors 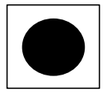 Button 3	
?? 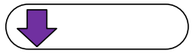 Down		**Dome/Periscope Aniimation** Down, Down	Double Click to get To the Details Page	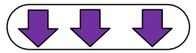 Down, Down, Down		**Close All Doors** 1 – Opens all doors 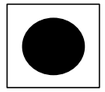 Button 4	
	Double Click to get To the Details Page	**All Open & Close** 1 - Waves the Dome Panels 2 - Flashes the Camera LEDs to Random Colors, 3 - Turns the HP LEDs to Rainbow 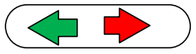 Left, Right,		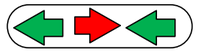 Left, Right,		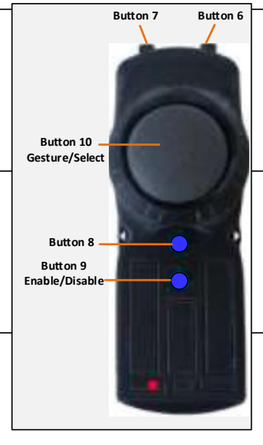 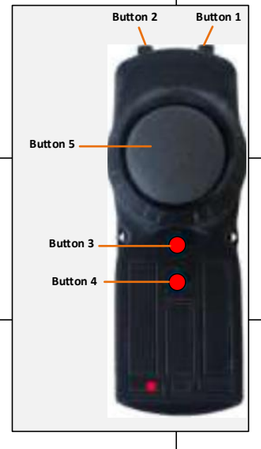	
	Double Click to get To the Details Page	**Harlem Shake** 1 - Waves the Dome Panels 2 - Flashes the Camera LEDs to Random Colors, 3 - Turns the HP LEDs to Rainbow 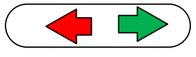 Right, Left,		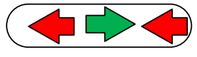 Right, Left,			
		All Close Up. Down		Up. Down			
		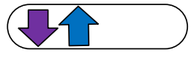 Down, Up		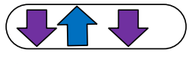 Down, Up			

R2D2-Wiring-Diagram--05-Sep-2026-10-31-PM

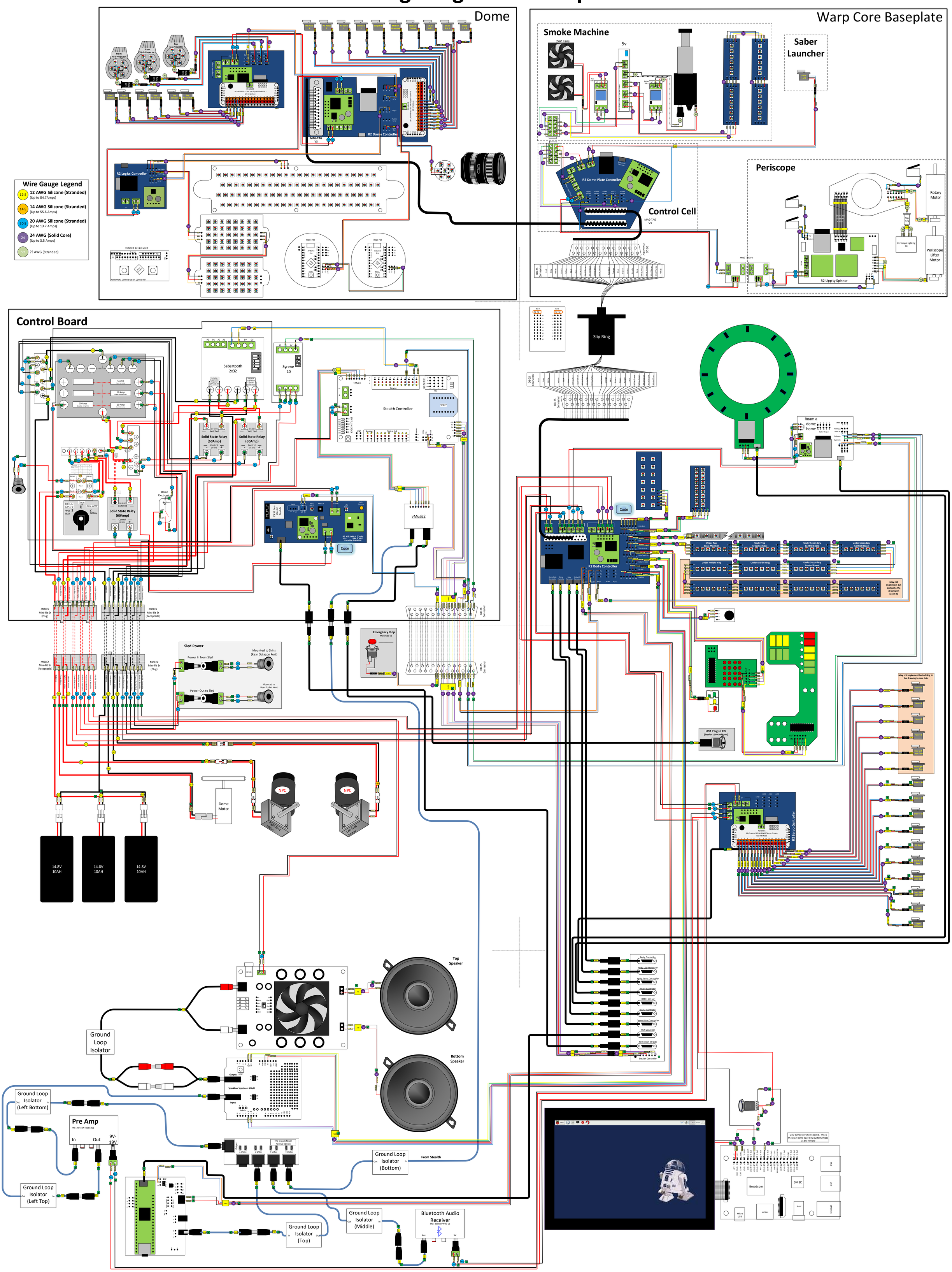

Actions	Details	Actions	Details	Actions	Details	Actions	Details
Normal Operations Left	g=4,5,1 a=A01	Harlem Shake Left, Left	g=454,5,5 a=A06	Open/Close Easing Left, Left, Left	g=45454,5,9 a=A13	Toggle Lights Button 1 Vader Theme LONG BTN 1	b=1,5,13 a=A10 lb=1,5,11 a=A16
Panel Wave Right	g=6,5,2 a=A02	Door Wave Right, Right	g=656,5,6 a=A12	Right, Right, Right		Fart Noise Button 2 Star Wars Theme LONG BTN 2	b=2,5,14 a=A21 lb=2,5,10 a=A15
Panel Wave Fast Up	g=2,5,3 a=A03	Short Circuit Up, Up	g=252,5,7 a=A14	Up, Up, Up		Flutter Button 3 Wave Utility Arm LONG BTN 3	b=3,5,15 a=A08 lb=3,5,17 a=A22
Dome & Periscope Down	g=8,5,4 a=A04	Periscope Seq 2 Down, Down	g=858,5,8 a=A17	Periscope Seq 10 Down, Down, Down	g=85858,5,12 a=A18	Toggle Door Open/Close Button 4 Arm Saber LONG BTN 4	b=4,5,16 a=A09 lb=4,5,18 a=A023
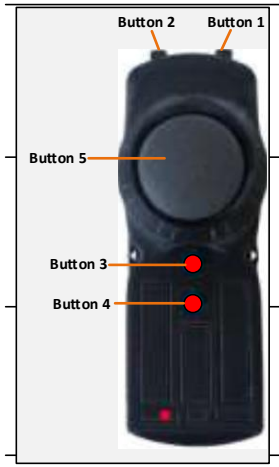		Left, Right,		Left, Right, Left		Sound Chat Launch Saber	b=6,1,2 lb=6,5,19 a=A024
		Right, Left,		Right, Left, Right,		Sound Bleep Smoke Sequence	b=7,1,5 lb=7,5,20 =A025
		Up, Down		Up, Down, Up		Sound Scream	b=8,1,6 lb=8,5,21 a=A026
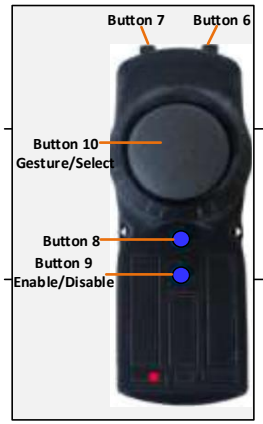		Down, Up		Down, Up, Down		Sound	b=9,1,2 lb=9,5,22 a=A027

WCB2

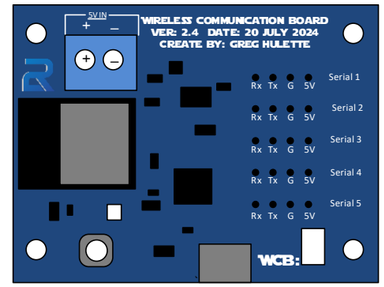

WCB2

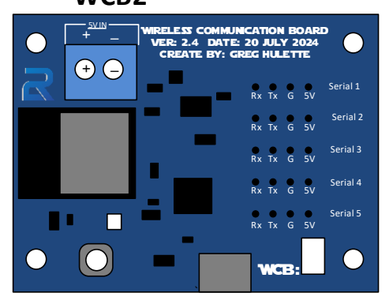

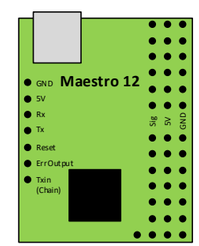

Kyber

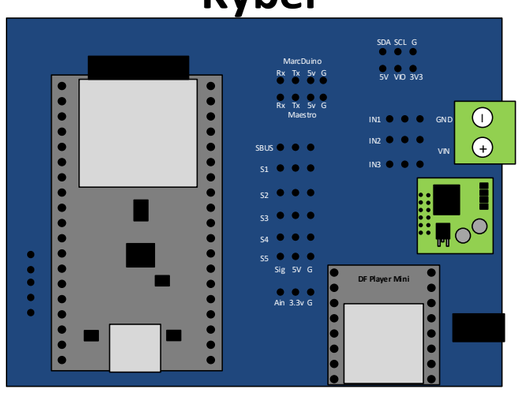
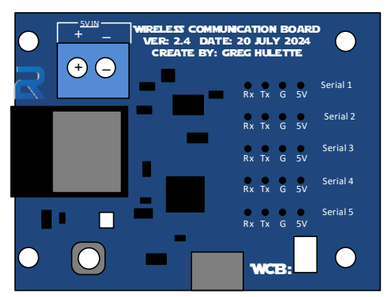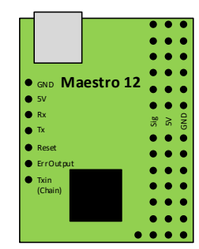
WCB1