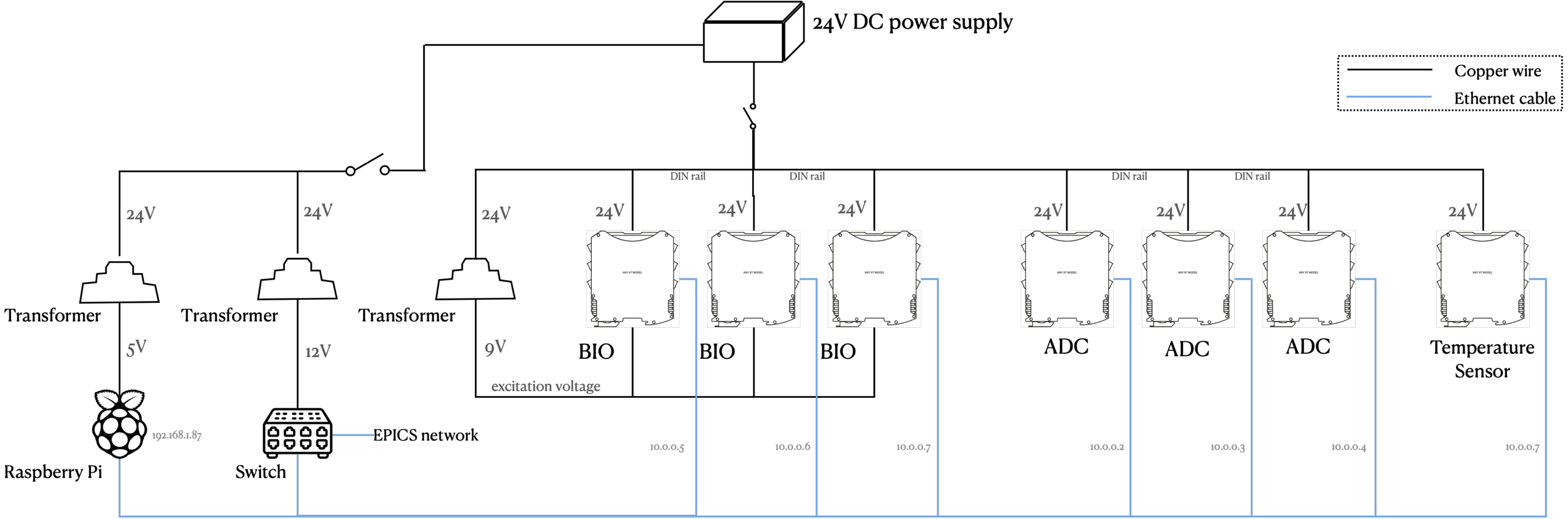

PEM diagram

Icons: https://www.flaticon.com/free-icons/raspberry-pi created by Freepik https://www.flaticon.com/free-icons/switch created by juicy_fish