Polarimeter Review for afterSRC and SAMURAI

Two beamline locations and the current afterSRC mechanical design

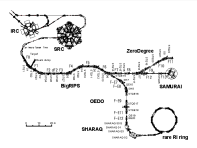

Polarimeter at afterSRC

Role

- Downstream polarimeter position after the SRC section.
- The polarimeter is organized around a dedicated target chamber.
- The present concept reuses the validated H+V+V detector arrangement from the current design family.

Current chamber concept

- Front beam port: `ICF114`
- Rear beam port: `ICF114`
- Top rotary feedthrough mount: `ICF70`
- No extra side vacuum ports in this variant

Polarimeter at the SAMURAI Side

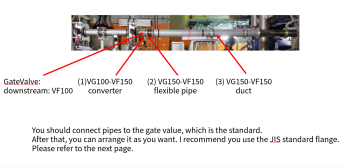

Role

- A SAMURAI-side polarimeter option is integration-driven rather than chamber-driven.
- The immediate boundary is defined by the beam pipe, the gate valve, and the local installation envelope.

Current interface understanding

- Local standard family: **JIS** vacuum flanges and pipe-chain hardware
- Fixed gate-valve boundary at the local downstream side: `JIS VF100`
- Transition pipe (1): `JIS VG100--VF150` converter
- Transition pipe (2): `JIS VG150--VF150` flexible pipe
- Transition pipe (3): `JIS VG150--VF150` rigid duct
- Local space and maintenance envelope remain the dominant constraints for the upstream / in-front-of-SAMURAI polarimeter option

afterSRC Polarimeter Design

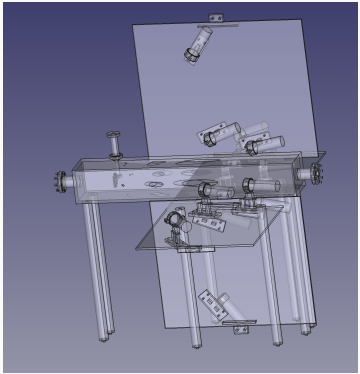

Interfaces visible in this view

- Front beamline interface: `ICF114` CF flange for the upstream beam connection
- Rear beamline interface: `ICF114` CF flange for the downstream beam connection
- Top target-drive interface: `ICF70` CF flange for the rotary feedthrough
- The chamber body is welded to short round beam pipes so the upstream and downstream beamline vacuum can be kept continuous after installation

Layout note

- This variant keeps the validated H+V+V polarimeter arrangement and stand geometry from the current design family

Current chamber note

The current LOS openings on the target chamber are **temporary visualization cuts** used only to show the particle trajectories through the chamber region.

In the fabrication-oriented revision, this area will be replaced by a **rectangular local cutout**, and the wall there will be **thinned to 2 mm**.

SAMURAI-side Polarimeter Design

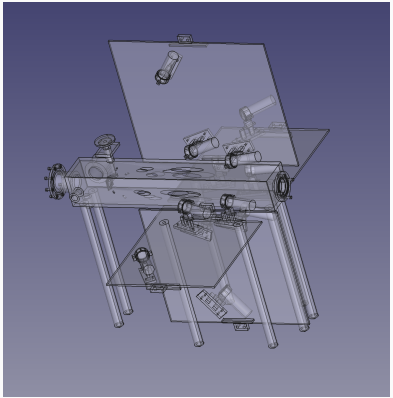

Interface interpretation

- The SAMURAI-side mechanical interface follows the existing **JIS** beam-pipe standard rather than the ICF chamber style used at afterSRC
- Fixed local beamline boundary at the gate valve: `JIS VF100`
- Required transition pieces in the present understanding are `JIS VG100--VF150`, then `JIS VG150--VF150` flexible and rigid sections

Mechanical consequence

- This option must be sized around the existing valve, pipe, and maintenance envelope close to SAMURAI
- Interface definition and available straight length remain the primary constraints for the final detector-side adapter geometry