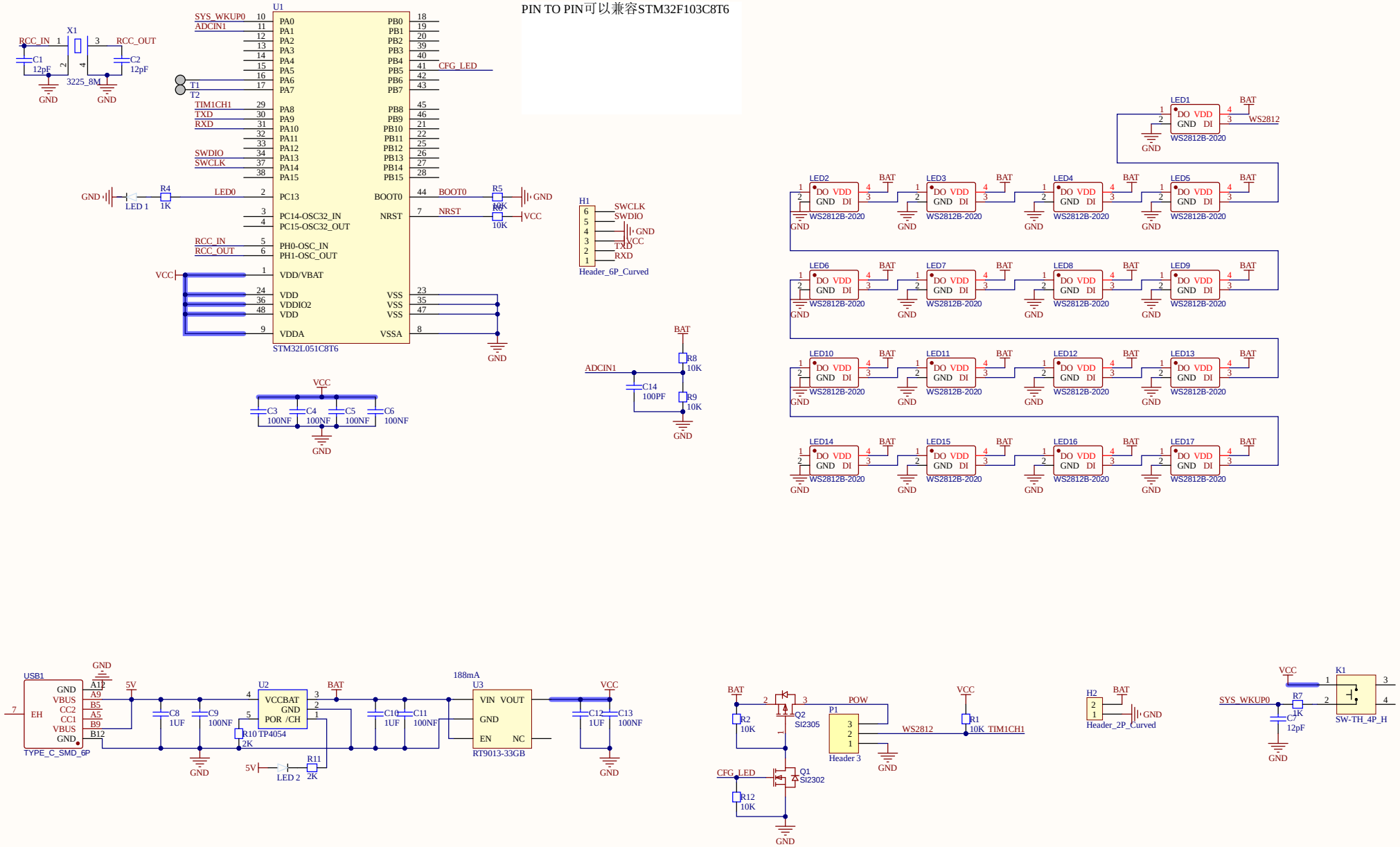
PIN TO PIN可以兼容STM32F103C8T6
U1
STM32L051C8T6
X1
3225_8M
RCC_IN
RCC_OUT
C1 12pF
C2 12pF
GND
SYS_WKUP0
ADCIN1
T1
T2
TIM1CH1
TXD
RXD
SWDIO
SWCLK
CFG_LED
LED0
LED 1
R4 1K
BOOT0
NRST
R5 10K
R6 10K
VCC
PA0
PA1
PA2
PA3
PA4
PA5
PA6
PA7
PA8
PA9
PA10
PA11
PA12
PA13
PA14
PA15
PC13
PC14-OSC32_IN
PC15-OSC32_OUT
PH0-OSC_IN
PH1-OSC_OUT
VDD/VBAT
VDD
VDDIO2
VDDA
VSS
VSSA
PB0
PB1
PB2
PB3
PB4
PB5
PB6
PB7
PB8
PB9
PB10
PB11
PB12
PB13
PB14
PB15
H1
Header_6P_Curved
C3 100NF
C4 100NF
C5 100NF
C6 100NF
ADCIN1
C14 100PF
R8 10K
R9 10K
BAT
LED1
LED2
LED3
LED4
LED5
LED6
LED7
LED8
LED9
LED10
LED11
LED12
LED13
LED14
LED15
LED16
LED17
WS2812B-2020
WS2812
USB1
TYPE_C_SMD_6P
5V
C8 1UF
C9 100NF
U2
VCCBAT
POR /CH
R10 TP4054
2K
R11 2K
LED 2
C10 1UF
C11 100NF
188mA
U3
VIN VOUT
EN NC
RT9013-33GB
C12 1UF
C13 100NF
Q2 SI2305
Q1 SI2302
R2 10K
R12 10K
CFG_LED
POW
P1
Header 3
WS2812
R1 10K TIM1CH1
H2
Header_2P_Curved
K1
SW-TH_4P_H
R7 1K
C7 12pF

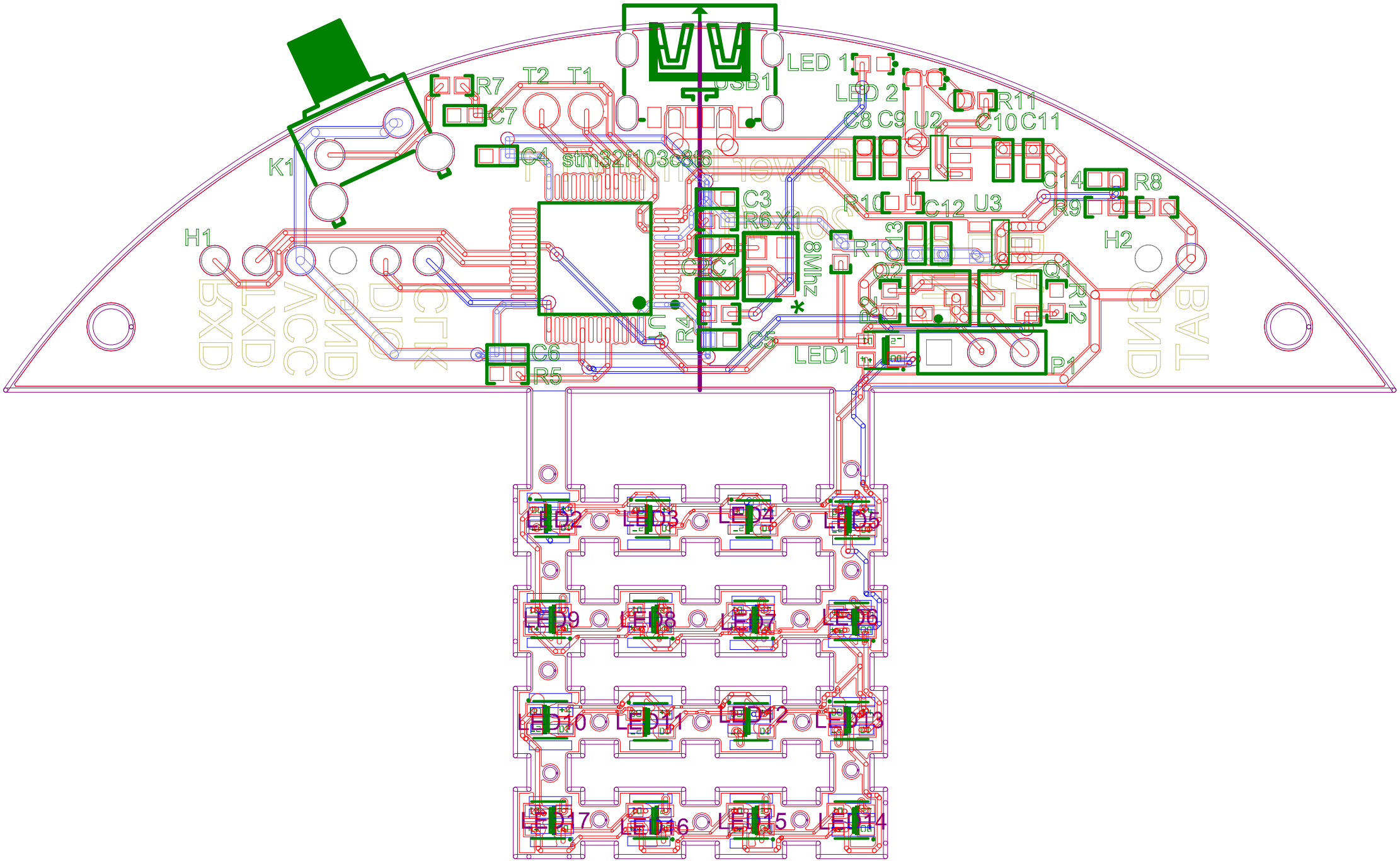
LED 1
LED 2
USB1
R7
T2
T1
C7
C4
stm32f103c8t6
K1
C8 C9
U2
R11
C10 C11
C14
R8
R9
R10
C12
U3
C3
R6
X1
8Mhz
C2
C1
R4
C5
C6
R5
H1
H2
Q1
Q2
R12
LED1
P1
DXR
DXT
VCC
GND
CLK
GND
BAT
TAB
LED2
LED3
LED4
LED5
LED9
LED8
LED7
LED6
LED10
LED11
LED12
LED13
LED17
LED16
LED15
LED14