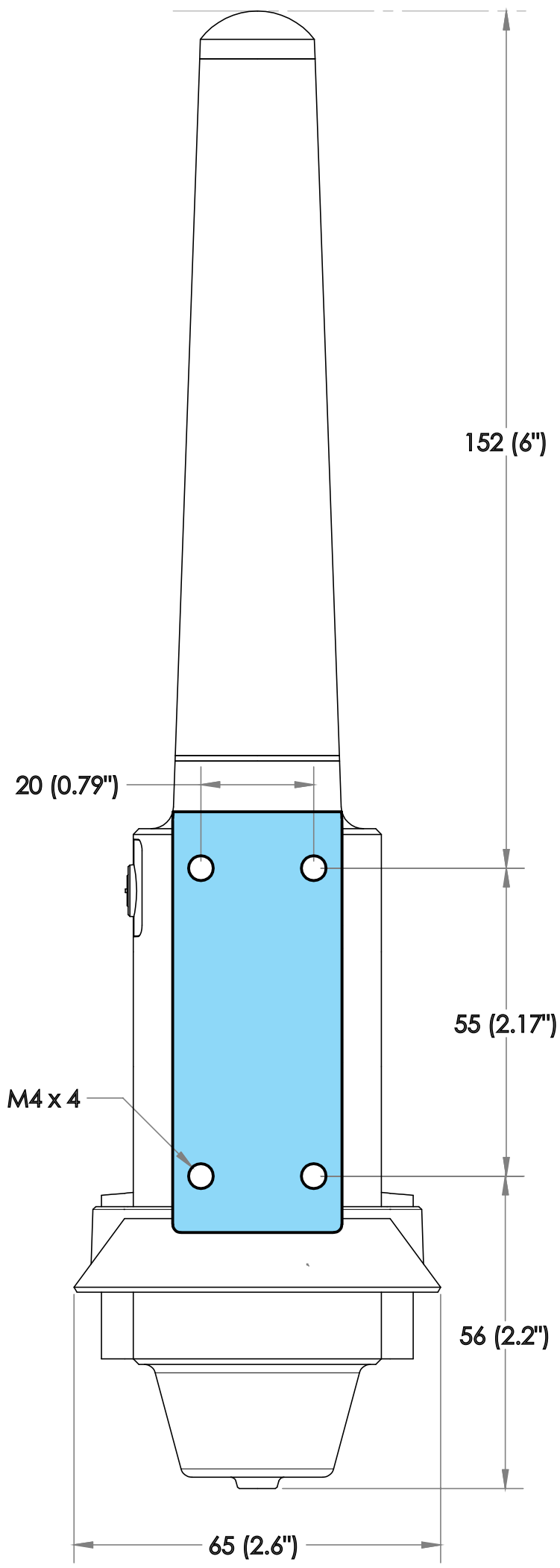

OSS WALL INSTALLATION DIAGRAM