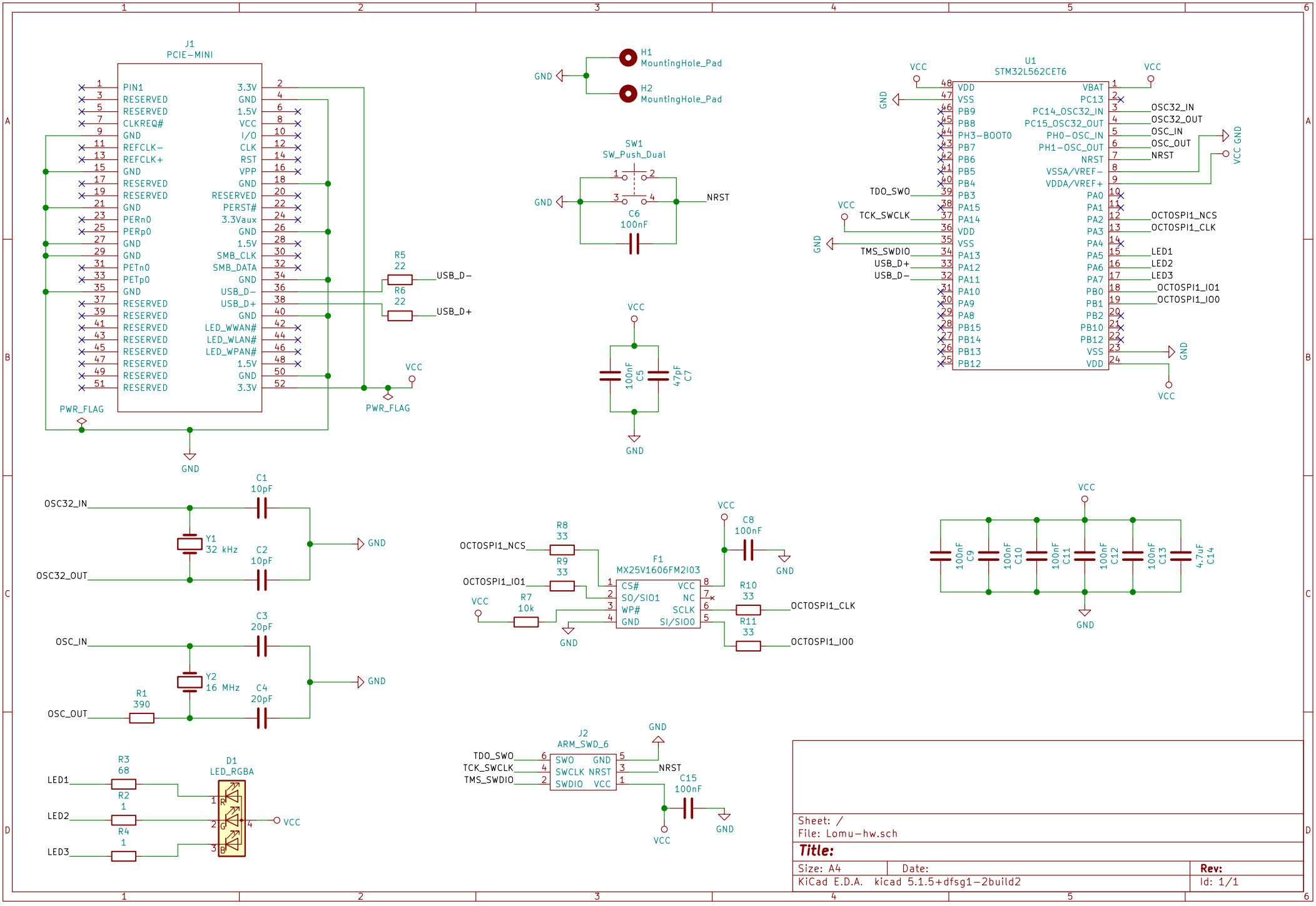
J1
PCIE-MINI
PIN1
RESERVED
CLKREQ#
GND
REFCLK-
REFCLK+
PERn0
PERp0
PETn0
PETp0
3.3V
1.5V
VCC
I/O
CLK
RST
VPP
PERST#
3.3Vaux
SMB_CLK
SMB_DATA
USB_D-
USB_D+
LED_WWAN#
LED_WLAN#
LED_WPAN#
PWR_FLAG
H1
MountingHole_Pad
H2
MountingHole_Pad
SW1
SW_Push_Dual
C6
100nF
NRST
R5
22
R6
22
USB_D-
USB_D+
C5
100nF
C7
47pF
U1
STM32L562CET6
VDD
VSS
PB9
PB8
PH3-BOOT0
PB7
PB6
PB5
PB4
PB3
PA15
PA14
PA13
PA12
PA11
PA10
PA9
PA8
PB15
PB14
PB13
PB12
VBAT
PC13
PC14_OSC32_IN
PC15_OSC32_OUT
PH0-OSC_IN
PH1-OSC_OUT
VSSA/VREF-
VDDA/VREF+
PA0
PA1
PA2
PA3
PA4
PA5
PA6
PA7
PB0
PB1
PB2
PB10
PB12
OSC32_IN
OSC32_OUT
OSC_IN
OSC_OUT
NRST
VCC GND
TDO_SWO
TCK_SWCLK
TMS_SWDIO
USB_D+
USB_D-
OCTOSPI1_NCS
OCTOSPI1_CLK
LED1
LED2
LED3
OCTOSPI1_IO1
OCTOSPI1_IO0
C1
10pF
C2
10pF
Y1
32 kHz
OSC32_IN
OSC32_OUT
C3
20pF
C4
20pF
Y2
16 MHz
OSC_IN
OSC_OUT
R1
390
R8
33
R9
33
R7
10k
F1
MX25V1606FM2I03
CS#
SO/SIO1
WP#
SI/SIO0
SCLK
NC
C8
100nF
R10
33
R11
33
OCTOSPI1_NCS
OCTOSPI1_IO1
OCTOSPI1_CLK
OCTOSPI1_IO0
C9
100nF
C10
100nF
C11
100nF
C12
100nF
C13
100nF
C14
4.7uF
R3
68
R2
1
R4
1
D1
LED_RGBA
LED1
LED2
LED3
J2
ARM_SWD_6
SWO
SWCLK
SWDIO
TDO_SWO
TCK_SWCLK
TMS_SWDIO
C15
100nF
Sheet: /
File: Lomu-hw.sch
Title:
Size: A4
Date:
Rev:
KiCad E.D.A. kicad 5.1.5+dfsg1-2build2
Id: 1/1