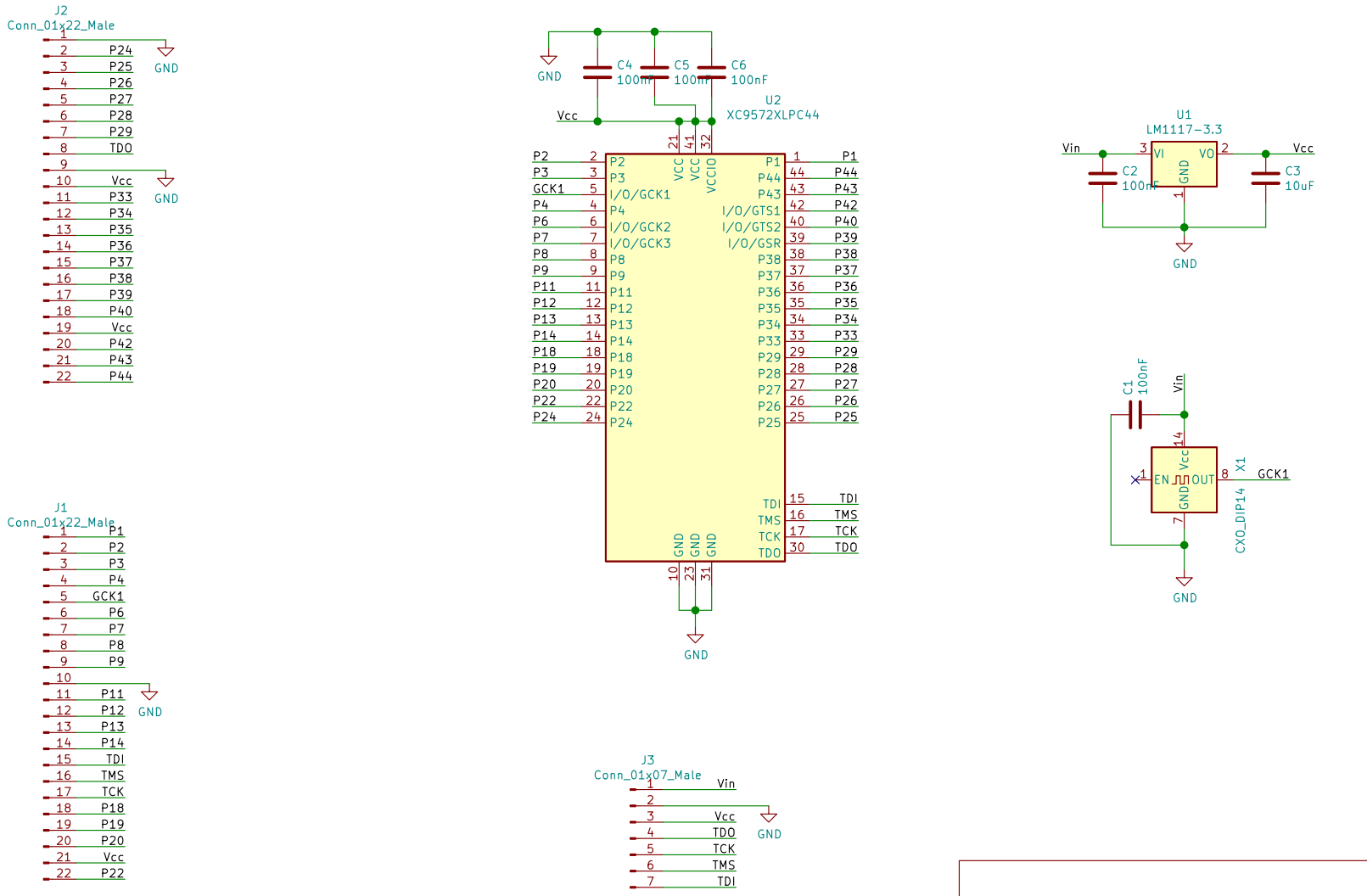

Sheet: /
File: XC9500XL_development_board.sch

Title:

Size: A4	Date:	**Rev:**
KiCad E.D.A. kicad 5.1.5+dfsg1-2build2		Id: 1/1