z/OS
2.5

Hardware Configuration Definition User's Guide

SC34-2669-50

Note

Before using this information and the product it supports, read the information in "Notices" on page 427.

This edition applies to Version 2 Release 5 of z/OS® (5650-ZOS) and to all subsequent releases and modifications until otherwise indicated in new editions.

Last updated: 2022-12-12

© Copyright International Business Machines Corporation 1994, 2022.
US Government Users Restricted Rights – Use, duplication or disclosure restricted by GSA ADP Schedule Contract with IBM Corp.

Contents

Figures ..... **xi**

Tables ..... **xxvii**

About this document ..... **xxxi**
Who this document is for xxxi
Related information xxxi
How to use this document xxxi
How this document is organized xxxii
How to read syntax diagrams xxxiii
Symbols xxxiii
Syntax items xxxiii
Syntax examples xxxiv

How to send your comments to IBM ..... **xxxvii**
If you have a technical problem xxxvii

Summary of changes ..... **xxxix**
Summary of changes for z/OS Version 2 Release 5 (V2R5) xxxix
Summary of changes for z/OS Version 2 Release 4 (V2R4) xl
Summary of changes for z/OS Version 2 Release 3 (V2R3) xl

Chapter 1. Hardware configuration definition - What is it? **1**
What HCD is and how it differs from MVSCP and IOCP 1
Definition of configuration data 1
Validation of configuration data 3
Reconfiguration of configuration data 3
What HCD offers you 4
How HCD works 5
Objects managed in the IODF 5
IODF used at IPL 6
Relationship of data sets used by HCD 6
The environment in which HCD operates 7
HCD and the coupling facility 8
Support of processor clusters 8
Support of the sysplex environment 9

Chapter 2. Migration **11**
Migration overview 11
Migration roadmap 11
Security migration 11
Migration tasks 12

Chapter 3. How to set up, customize and start HCD **13**
Setting up HCD 13
How to invoke HCD in dialog mode 14
Tailoring the CLIST CBDCHCD 15
Starting and ending HCD 16
Defining an HCD profile 16

Working with the HCD Profile Options dialog.... 18
Keywords.... 19
Customizing HCD EXEC procedures.... 26

Chapter 4. How to work with I/O definition files (IODF).... 29
IODF naming convention.... 29
Work IODF.... 29
Production IODF.... 30
Associated data sets.... 30
Create or specify an IODF.... 30
Multi-user access.... 31
Sharing IODFs.... 32
Deciding on the number of IODFs.... 32
The master IODF concept.... 33
How HCD arranges devices into groups in an IODF.... 34
Change to another IODF.... 35
Change a production IODF / Create a work IODF based on a production IODF.... 35
View active IODF.... 35
Backup work or production IODFs.... 35
Maintain IODFs.... 36
Delete an IODF.... 36
Copy an IODF.... 36
Change IODF attributes.... 37
View an IODF.... 37
Export an IODF.... 38
Import an IODF.... 40
Upgrade an IODF.... 40
Work with configuration packages.... 41
Activity logging and change logging.... 45
Rules for automatic activity logging.... 47
Actions performed on IODFs and related activity and change log files.... 47
IODF release level compatibility.... 47

Chapter 5. How to use the dialog.... 49
Window layout.... 49
Working with lists.... 51
Numbered selection lists.... 51
Unnumbered single selection lists.... 51
Unnumbered multiple selection lists.... 52
Action lists.... 52
Message lists.... 55
Promptable fields.... 56
Commands and function keys.... 56
Getting help.... 57
Navigating through the dialog.... 57
Moving forward and backward within a task.... 58
Fast path.... 58
Filtering.... 61
Job statement information used in panels.... 64

Chapter 6. How to define, modify, or view a configuration.... 65
Creating new objects.... 65
Add.... 65
Add like.... 65
Repeat (copy).... 66
Navigating through HCD.... 66
Centralized navigation.... 66

Hierarchical navigation....66
Graphical navigation....66
Navigation map....67
Suggested sequence to define a configuration....68
Working with operating system configurations....69
Defining operating system configurations....69
Changing operating system configurations....70
Repeating (copying) operating system configurations....71
Deleting operating system configurations....71
Working with EDTs....72
Defining EDTs....72
Changing EDTs....72
Repeating (copying) EDTs....73
Deleting EDTs....73
Working with generics....73
Working with esoteric groups....74
Defining esoteric groups....74
Changing esoteric groups....74
Adding devices to esoterics....75
Repeating (copying) esoteric groups....75
Deleting esoteric groups....76
Working with processors....76
Defining processors....76
Changing processors....78
Repeating (copying) processors....80
Copying an SMP processor to an XMP channel subsystem....81
Deleting processors....82
Working with channel subsystems....82
Defining channel subsystems....82
Repeating (copying) channel subsystems....83
Copying a channel subsystem to an SMP processor....85
Changing channel subsystems....86
Deleting channel subsystems....86
Working with partitions....87
Defining partitions....87
Changing partitions....88
Repeating (copying) partitions....89
Transferring partition configurations....89
Deleting partitions....91
Working with PCIe functions....92
Defining PCIe functions....92
Changing PCIe functions....95
Deleting PCIe functions....95
Working with channel paths....96
Using Multiple Image Facility....96
More about spanned channel paths in multiple LCSSs....96
Defining channel paths....97
Establishing coupling facility channel path connections....104
Defining Server Time Protocol (STP) links....107
Disconnecting coupling facility channel path connections....107
Changing channel paths....107
Aggregating channel paths....110
Deleting channel paths....112
Working with control units....112
Defining control units....112
Changing control units....116
Changing control unit attachment parameters for multiple processors....118
Disconnecting control units from a processor....118

Deleting control units....118
Working with devices....118
Defining devices....118
Changing devices....126
Disconnecting devices from an operating system....131
Showing or hiding parameter/feature definitions of devices....131
Deleting devices....132
Working with operating system consoles....132
Changing operating system consoles....133
Deleting operating system consoles....133
Working on IODFs enabled for multi-user access....133
Simultaneously updating and viewing an IODF....133
Concurrently updating an IODF....134
Immediately reflecting changes during concurrent updates....135
Viewing information....135
Viewing object definitions....136
Viewing coupling facility information....137
Viewing CTC connections....137

Chapter 7. How to work with switches....143
Possibilities of switch connections....143
Advantages of switch definitions with HCD....145
Defining switches....145
Working with switches....145
Defining switch characteristics....145
Changing switch data....148
Moving ports....148
Deleting switches....149
Working with connections to switches....149
Defining connections to switches....150
Additional actions on the port list....152
Working with switch configurations....153
Defining switch configuration data....153
Changing the switch configuration ID....155
Generating a switch matrix....155
Deleting switch configurations....156

Chapter 8. How to work with I/O Autoconfiguration....159
How to define autoconfiguration policies....159
How to set keywords for autoconfiguration policies....160
How to change autoconfiguration policies during the autoconfiguration process....163
How to define logical partition groups for autoconfiguration....164
How to define OS groups for autoconfiguration....165
How to perform automatic I/O configuration....166
How to apply updates to the autoconfiguration proposals....169
How to work in unattended mode....172
Prerequisites and operational considerations for using I/O Autoconfiguration....172

Chapter 9. How to activate or process configuration data....175
Build a production IODF....176
Build an IOCDS....179
Build processor cluster IOCDSs....181
Manage processor cluster IPL attributes....184
Build an IOCP input data set....185
How to build an IOCP data set....185
IOCP enhancements....187
IOCP input data sets using extended migration....187

Using the IOCP data set as input for the CHPID Mapping Tool..... 189
How to interact with the CHPID Mapping Tool..... 189
Process overview..... 190
How to insert or update PCHIDs.....190
Create JES3 initialization stream checker data.....191
Build I/O configuration data.....192
Verify an I/O configuration..... 193
Verifying a configuration against the local system.....193
Verifying a configuration against a system in the sysplex.....193
The I/O path list..... 194
Activate a configuration dynamically..... 195
View active configuration.....195
How to activate if hardware and software changes are allowed..... 196
How to activate if software-only changes are allowed..... 198
Activate a configuration sysplex-wide..... 199
Displaying active sysplex members.....199
Activate software configuration changes only..... 200
Activate software and hardware configuration changes.....202
Switch IOCDS for the next POR..... 203
Activate a configuration HMC-wide.....203
Available configuration activation actions.....206
Establishing connectivity to remote systems.....208
Prerequisites for working with CPC images.....209
Activate a configuration on systems not running HCD..... 209
Activate hardware changes only (action code 'a').....210
Recovery..... 211
View current active configuration (action code 'c')..... 211
Download active configuration (action code 'd')..... 212
Prerequisites..... 212
Build a CONFIGxx member..... 212
Process the Display M=CONFIG(xx) command..... 214
Switch IOCDS for next POR..... 214
Switch IOCDS for processor without SNA address..... 215
Switch IOCDS for processors in a processor cluster with SNA address defined..... 215
Switch IOCDS for systems in a sysplex..... 215
Specify an IODF for IPL..... 216
IODF processing at IPL..... 216

Chapter 10. How to print and compare configuration data.....217
Print configuration reports..... 217
Channel Subsystem Report.....217
Switch Report.....218
Operating System Report.....218
CTC Connection Report.....218
I/O Path Report..... 218
Supported Hardware Report.....219
I/O Definition Reference..... 219
How to print a textual report.....219
Create or view graphical configuration reports.....220
Prerequisites..... 220
How to create a graphical configuration report.....221
Printing the output..... 223
Viewing the output..... 223
How to print list panels.....226
HCD compare functions.....228
Compare IODFs.....228
Compare CSS / operating system views.....232

View and print the HCD activity log....232

Chapter 11. How to query supported hardware and installed UIMs....233
Query supported processors....233
Query supported switches....235
Query supported control units....235
Query supported devices....237
Query installed UIMs....237

Chapter 12. How to migrate existing input data sets....239
Migration sequence....239
LPAR considerations....239
Preparing your input data sets for migration....239
Data requiring attention....240
Preparing additional input data sets for migration....242
Migrating input data sets using the HCD dialog....246
Step 1: Specify the work IODF....246
Step 2: Migrate the input data sets....246
Step 3: Analyze errors and correct the input data....247
Step 4: Update configuration data....248
Migrating input data sets using the batch utility....248
Step 1: Create the work IODF....248
Step 2: Migrate input data set....248
Step 3: Analyze errors and correct the input data....248
Step 4: Build production IODF....249
Changing I/O configurations by editing data sets....249
Additional parameters and statements....250
Updating parts of a configuration by migrating input data sets....273
Possible actions on objects using the incremental update....273
How to invoke the incremental update....277
Resolving migration errors....283
Errors detected during assembly process....284
Errors detected during validation process....285
Insufficient data set sizes....286

Chapter 13. How to invoke HCD batch utility functions....289
Input parameter string....290
Start the dialog....290
Initialize IODF....291
Upgrade IODF....292
Migrate I/O configuration statements....292
Build a Production IODF....295
Build a work IODF from a production IODF....296
Build an IOCDS or an IOCP input data set....297
Activate a production IODF....299
Build an HCPRIO input data set....300
Build I/O configuration data....301
Copy IODF....303
Print configuration reports....304
Create a graphical configuration report....307
Compare IODFs or CSS/OS Reports....310
Import an IODF....314
Export an IODF....315
Batch IODF copy example....317
List of standard DD names....318
List of alternate DD names....319

Chapter 14. Security and other considerations.....321
Security-related considerations.....321
Defining RACF profiles.....321
Giving users access authority.....322
Access to profile CBD.CPC.ACTIVATE.netid.nau.....324
Access to HWI.* profiles.....324
How to set up PassTickets for working with CPC images on z/OS.....324
How to set up PassTickets for working with CPC images on z/VM.....325
Providing additional security for devices.....325
Catalog considerations.....326
Data sets cataloged with an esoteric device group name.....327
SMS-related considerations.....328
ISPF-related considerations.....328
z/VM-related considerations.....328

Appendix A. How to navigate through the dialog.....331

Appendix B. Configuration reports.....337
Textual configuration reports.....337
Channel subsystem reports.....337
Switch reports.....349
Operating System reports.....350
CTC Connection Report.....355
I/O Path Report.....356
Supported hardware report.....358
I/O Definition Reference.....374
Graphical configuration reports.....375
LCU Report.....376
IODF compare reports.....376
Processor Compare Report.....377
Channel Subsystem Compare Report.....377
PCIe Function Compare Report.....377
Partition Compare Report.....378
Channel path compare report.....379
Control Unit Attachment Compare Report.....380
Device Attachment Compare Report.....380
Control Unit Compare Report.....381
Device Compare Report.....381
Switch Compare Report.....382
Switch Detail Compare Report.....382
Switch Configuration Compare Report.....382
Switch Configuration Detail Compare Report.....383
Esoteric Compare Report.....383
Operating System Compare Report.....384
OS Device Compare Report.....384
OS Console Compare Report.....385
CSS / OS Device Compare Report.....385

Appendix C. Problem determination for HCD.....387
Identifying problems.....387
HCD abnormal termination.....388
Error during IPL (Wait State Codes).....390
Problems with panels and function key assignment.....391
Problems with help information provided by HCD.....391
Problems with output of HCD textual reports.....392
Problems with output of HCD graphical reports.....393

Problems during initialization of HCD....395
Problems with UIMs....396
HCD internal problems....397
Problems with the Transmit Configuration Package action....397
Diagnostic information and tools....401
HCD messages....401
HCD trace facility....402
Tracing for activate commands....407
IODF dump....408
Repair an IODF....408
MVS dumps and traces....409
IPCS reports....409
Searching problem reporting data bases and reporting problems....409
Sending an IODF to a different location....409

Appendix D. HCD object management services....411
How to invoke the HOM services....411
Data input and output areas....412
Request block (HRB)....412
Functions....414
Example....415
Return codes....416
Reason codes....416

Appendix E. Establishing the host communication....417
Setting up TCP/IP definitions for z/OS....417
Controlling access to HCD services....418
Skeleton used to start the HCD agent....419
Starting the HCD dispatcher as a started task....419
Starting the HCD dispatcher as a batch job....420
Stopping the HCD dispatcher....420
Define an HCD profile....420
Allocate the HCD trace data set for remote HCD sessions....421
Verifying TCP/IP host communication....421
Encrypting the host communication for z/OS....421
Set up secure communication for the host....421
Set up secure communication for the workstation....424
TCP/IP problem determination....424

Appendix F. Accessibility....425

Notices....427
Terms and conditions for product documentation....428
IBM Online Privacy Statement....429
Policy for unsupported hardware....429
Minimum supported hardware....429

Trademarks....431

Programming interface information....433
Glossary....435

Index....443

Figures

1. Multiple data set configuration definition without HCD.... 2

2. Single data set configuration definition with HCD.... 3

3. Configuration definition with HCD.... 5

4. Objects managed by HCD.... 6

5. Building a production IODF and an IOCDS.... 6

6. Relationship of data sets used by HCD.... 7

7. Processor configuration with coupling facility implemented.... 8

8. Sample ISPF Master Application Menu.... 15

9. HCD Primary Task Selection panel.... 16

10. Profile Options and Policies.... 18

11. HCD Profile Options.... 18

12. Example of an HCD Profile.... 26

13. Create Work I/O Definition File.... 31

14. IODF Distribution/Merge Process.... 34

15. Maintain I/O Definition Files.... 36

16. Create New I/O Definition File.... 37

17. View IODF information.... 37

18. Define JCL for IODF Import.... 38

19. Specify Target IODF and User Password.... 39

20. Upgrade an IODF.... 40

21. Create Work I/O Definition File.... 41

22. Sample Configuration Package List — left panel.... 42

23. Add Configuration Package.... 42

24. Transmit Configuration Package....44

25. Example of an Activity Log without automatic logging.... 45

26. View Activity Log.... 46

27. Example of a window layout.... 49

28. Layout of a data entry dialog....50

29. Primary Task Selection panel.... 51

30. Example of a single selection list.... 52

31. Example of a Multiple Selection List....52

32. Action list with a context menu.... 53

33. Action list with action codes.... 54

34. Message List.... 55

35. Explanation Message.... 55

36. Example of a Prompt Selection Panel.... 56

37. Using the Goto Action Bar Choice....58

38. Operating System Configuration List as example of a Selection List.... 59

39. Filter example.... 62

40. Filter I/O Device List....63

41. Reduced I/O Device List (using a filter).... 63

42. Navigation map.... 68

43. Operating System Configuration List.... 69

44. Add Operating System Configuration.... 70

45. EDT List....72

46. Add EDT.... 72

47. Work with esoterics....74

48. Add Esoteric.... 74

49. Assign/Unassigned devices to esoteric....75

50. Define, modify, or view configuration data....76

51. Add a processor....77

52. Available support levels....77

53. Change Processor Definition....78

54. Update Channel Path Identifiers....79

55. Repeat Processor....80

56. Copy to Channel Subsystem....82

57. Add Channel Subsystem....82

58. Channel Subsystem List....83

59. Add Channel Subsystem....83

60. Repeat Channel Subsystem....84

61. Specify New Partition Names....84

62. Add Channel Subsystem....84

63. CTC Connection Update List....85

64. Copy to Processor....85

65. Change Channel Subsystem....86

66. Partition List....87

67. Add Partition....87

68. Transfer Partition Configuration....90

69. Confirm Delete Partition....91

70. PCIe Function List....92

71. PCIe Function List....93

72. Add PCIe Function....93

73. Add/Modify Physical Network IDs....94

74. Define Access List..... 95

75. Channel Path List..... 97

76. Add Channel Path..... 98

77. Define Access List..... 98

78. Define Access List..... 99

79. Define Candidate List..... 99

80. Channel Path/Partition Matrix..... 100

81. Update CHPID Settings..... 101

82. Specify IQD Channel Parameters..... 102

83. Allow for more than 160 TCP/IP stacks..... 102

84. Specify HCA Attributes..... 103

85. Specify Coupling PCHID/Port Attributes..... 103

86. CF Channel Path Connectivity List..... 105

87. Connect to CF Channel Path..... 105

88. Add CF Control Unit and Devices..... 106

89. Channel Path List..... 109

90. Confirm Copy Control Unit and Device Attachments..... 110

91. Aggregate CHPID..... 111

92. Select Control Units to be Aggregated..... 111

93. Control Unit List..... 113

94. Add Control Unit..... 113

95. Select Processor / Control Unit (1)..... 114

96. Select Processor / Control Unit (2)..... 115

97. Add Control Unit..... 115

98. Change Channel Path Link Addresses..... 116

99. Modify Affected Control Unit Parameters..... 117

100. Modify Device Parameters.....117

101. I/O Device List with device groups.....119

102. I/O Device List with single devices.....120

103. Add Device..... 120

104. Device / Processor Definition..... 122

105. Define Device / Processor.....122

106. Define Device Candidate List.....123

107. Define Device to Operating System Configuration.....124

108. Specify Subchannel Set ID..... 125

109. Define Device Parameters / Features.....125

110. Assign/Unassigned Device to Esoteric.....125

111. Change Device Definition.....126

112. Change Device Group / Operating System Configuration.....127

113. Define Device Group Parameters / Features..... 128

114. Attribute Group Change.....128

115. Device Type Group Change.....129

116. Specify Subchannel Set ID..... 129

117. Eligible Channel Subsystems..... 130

118. Eligible Operating System Configurations..... 130

119. Define Device to Operating System Configuration.....131

120. Device Parameters / Features Profile.....132

121. I/O Device List.....132

122. NIP Console List.....133

123. Add NIP Console.....133

124. Simultaneously updated and wiving an IODF....134

125. Simultaneously updated and wiving an IODF....134

126. Concurrently updating an IODF....134

127. Concurrently updating an IODF....135

128. Immediately reflecting changes during concurrent updates....135

129. Immediately reflecting changes during concurrent updates....135

130. FICON CTC connection established using a dynamic connection....138

131. CTC connection established using shared channels....138

132. CTC connection established using point-to-point....139

133. CTC Connection List....140

134. CTC Connection List (CTC/FC)....140

135. CTC Connection List (CNC/FCV/FC)....141

136. Filter CTC Connections....141

137. Message List....142

138. Configuration with one switch....143

139. Configuration with two switches (1)....144

140. Configuration with two switches (2)....144

141. Configuration with two cascading FICON switches....145

142. Switch List (left part)....146

143. Switch List (right part)....146

144. Add Switch....147

145. Change Switch Definition....148

146. Move Ports to a Target Switch....148

147. Confirm Delete Switch....149

148. Port List....150

149. Connect to Channel Path.....151

150. Connect to Control Unit.....151

151. Connect to Switch.....152

152. Port List.....152

153. Switch Configuration List.....153

154. Add or Repeat Switch Configuration.....153

155. Port Matrix.....154

156. Add or Repeat Switch Configuration.....155

157. Select Active Switch Configurations.....156

158. Confirm Delete Switch Configuration.....157

159. Profile Options and Policies.....160

160. Autoconfiguration Policies.....160

161. Autoconfiguration LP Group List.....164

162. Autoconfiguration LP Group Assignment List.....165

163. Add Partition to LP Group.....165

164. Autoconfiguration OS Group List.....166

165. Autoconfiguration OS Group Assignment List.....166

166. Add Operating System Configuration to OS Group.....166

167. Discovery and Autoconfiguration Options.....167

168. Discovered New or Changed Controller List.....169

169. Proposed Control Unit List.....170

170. Proposed Control Unit / Device List.....171

171. Activate or Process Configuration Data.....176

172. Build Production I/O Definition File.....177

173. Confirm Production IODF Name.....178

174. Confirm Delete I/O Definition File....178

175. Define Descriptor Fields....178

176. IOCDS List for locally building the IOCDS....179

177. Build IOCDS....180

178. Processor Cluster List....182

179. IOCDS List invoked from the Processor Cluster List....182

180. Build IOCDs....183

181. IPL Attribute List....184

182. Build IOCP Input Data Set....186

183. Example of an input data set for migration enhancements....189

184. Create JES3 INISH Stream Checker Data....191

185. Build I/O Configuration Data....192

186. Identify System I/O Configuration....193

187. I/O Path List....194

188. View Active Configuration....196

189. Activate or Verify Configuration....196

190. Activate New Configuration: Hardware and Software Changes....197

191. Activate Software Configuration Only....199

192. Activate Sysplex Member List....200

193. Activate Software Configuration Only....200

194. Message panel....201

195. View Configuration Status....202

196. Activate Hardware and Software Configuration....202

197. CPC Image List....205

198. CPC Image List scrolled to the right....205

199. Process System Command....207

200. Process System Command - returned messages....208

201. Activate New Hardware Configuration....210

202. Recover hardware only activation....211

203. View Active Configuration....211

204. Retrieve active IODF....212

205. Restrict Ports Eligible for Dynamic CHPID Management....213

206. Build CONFIGxx Member....213

207. Confirm Update CONFIGxx Member....213

208. Process Display M=CONFIG(xx) Command....214

209. Switch IOCDS....216

210. Print Configuration Reports....219

211. Limit Reports....220

212. Create or View Graphical Configuration Report....222

213. Define Report Layout....222

214. Viewing a sample report....224

215. Example of a printed list....228

216. Compare IODFs....229

217. Limit Processor Compare Reports....230

218. Limit Switch Compare Reports....230

219. Limit Operating System Compare Reports....231

220. Select Print Options (for Compare IODFs only)....231

221. Select Print Options (for CSS/OS Compare only)....232

222. Query supported processors....233

223. Supported Processors....234

224. Supported Processors..... 234

225. Supported Processors..... 234

226. View Channel Path Information..... 235

227. Supported Switches..... 235

228. Supported Control Units..... 236

229. Supported Control Units..... 236

230. CU - Device Attachment List..... 236

231. Supported Device Type List..... 237

232. Device - CU Attachment List..... 237

233. Installed UIMs..... 238

234. View Supported Devices..... 238

235. IOCP Migration..... 243

236. IOCP Migration..... 243

237. IOCP Migration..... 243

238. IOCP Migration..... 244

239. IOCP Migration..... 244

240. IOCP Migration..... 244

241. MVSCP Migration..... 245

242. MVSCP Migration..... 245

243. MVSCP Migration..... 245

244. Migrate IOCP / MVSCP / HCPRIO Data..... 246

245. Partial Migration of an IOCP Input Data Set. A new partition is added. Control units and devices are mapped..... 278

246. Partial migration of an IOCP input data set. The whole logical control unit (control unit 100 and 200 and connected devices) are replaced by control unit 100 and its connected devices..... 279

247. Partial migration of an IOCP input data set. CHPIDs are defined as in the IOCP input data set..... 280

248. Partial migration of an IOCP input data set. Control unit defined for two processors is migrated to the first processor. 281

249. Partial migration of an IOCP input data set. Control unit defined for two processors is migrated to the second processor. 282

250. Partial migration of an MVSCP input data set. 282

251. Message List. 283

252. Message List containing an Assembler message. 284

253. Example: HCD Migration Log. 285

254. Build IOCDS job. 299

255. Build IOCP input data set. 299

256. Activate IODF job. 300

257. Recommended IODF catalog structure. 327

258. Define a VM operating system. 329

259. Define Device Parameters/Features for VM Device. 329

260. Primary Task Selection panel. 331

261. HCD - Edit profile options and policies - Option 0. 331

262. HCD - Define, Modify, or View Configuration Data - Option 1. 331

263. HCD - Define Operating System. 332

264. HCD - Define Switch - Option 1.2. 332

265. HCD - Define Processor and Channel Path - Option 1.3. 333

266. HCD - Define Control Unit - Option 1.4. 333

267. HCD - Define I/O Device - Option 1.5. 333

268. HCD - Primary Tasks - Options 2 - 7. 334

269. HCD - Generic Action Bar Options. 335

270. HCD - Generic Action Bar Options. 335

271. Processor Summary Report. 337

272. Channel Subsystem Summary Report. 338

273. PCIe Function Summary Report....339

274. CHID Summary Report....340

275. Partition Report....340

276. IOCDS Report....341

277. Channel Path Summary Report....342

278. Channel Path Detail Report....344

279. CF Channel Path Connectivity Report....344

280. Control Unit Summary Report....345

281. Control Unit Detail Report....346

282. Device Summary Report....347

283. Device Detail Report....349

284. Switch Summary Report....349

285. Switch Detail Report....350

286. Switch Configuration Summary Report....350

287. Switch Configuration Detail Report....350

288. Operating System Summary Report....351

289. MVS Device Report....351

290. MVS Device Detail Report....352

291. Eligible Device Table Report....352

292. NIP Console Report....353

293. VM Device Report....354

294. VM Device Detail Report....354

295. VM Console Report....354

296. CTC Connection Report....355

297. Sample of Diagnostic Messages coming with the CTC connection report....356

298. Example and Legend of an I/O Path Report (Part 1 of 2)..... 357

299. Example and Legend of an I/O Path Report (Part 2 of 2)..... 357

300. Supported Hardware Report (Part 1 of 23).....359

301. Supported Hardware Report (Part 2 of 23).....360

302. Supported Hardware Report (Part 3 of 23).....360

303. Supported Hardware Report (Part 4 of 23).....361

304. Supported Hardware Report (Part 5 of 23).....361

305. Supported Hardware Report (Part 6 of 23).....362

306. Supported Hardware Report (Part 7 of 23).....362

307. Supported Hardware Report (Part 8 of 23).....363

308. Supported Hardware Report (Part 9 of 23).....363

309. Supported Hardware Report (Part 10 of 23).....364

310. Supported Hardware Report (Part 11 of 23).....364

311. Supported Hardware Report (Part 12 of 23).....365

312. Supported Hardware Report (Part 13 of 23).....366

313. Supported Hardware Report (Part 14 of 23).....367

314. Supported Hardware Report (Part 15 of 23).....367

315. Supported Hardware Report (Part 16 of 23).....368

316. Supported Hardware Report (Part 17 of 23).....369

317. Supported Hardware Report (Part 18 of 23).....370

318. Supported Hardware Report (Part 19 of 23).....370

319. Supported Hardware Report (Part 20 of 23).....371

320. Supported Hardware Report (Part 21 of 23).....372

321. Supported Hardware Report (Part 22 of 23).....373

322. Supported Hardware Report (Part 23 of 23).....373

323. I/O Definition Reference (Part 1 of 5)..... 374

324. I/O Definition Reference (Part 2 of 5)..... 374

325. I/O Definition Reference (Part 3 of 5)..... 375

326. I/O Definition Reference (Part 4 of 5)..... 375

327. I/O Definition Reference (Part 5 of 5)..... 375

328. LCU report..... 376

329. Processor Compare Report..... 377

330. Channel Subsystem Compare Report..... 377

331. PCIe Function Compare Report..... 378

332. Partition Compare Report..... 378

333. Channel Path Compare Report..... 379

334. Control Unit Attachment Compare Report..... 380

335. Device Attachment Compare Report..... 380

336. Control Unit Compare Report..... 381

337. Device Compare Report..... 381

338. Switch Compare Report..... 382

339. Switch Detail Compare Report..... 382

340. Switch Configuration Compare Report..... 382

341. Switch Configuration Detail Compare Report..... 383

342. Esoteric Compare Report..... 383

343. Operating System Compare Report..... 384

344. OS Device Compare Report..... 384

345. OS Console Compare Report..... 385

346. CSS / OS Device Compare..... 385

347. Example: Trace output..... 403

348. Example: Trace output in case of Abend..... 404

349. Example: JCL stream for producing an IODF dump..... 408

350. Relationship between HCD client, HCD dispatcher, and HCD agent..... 417

351. Sample JCL for creating a user ID for UNIX System Services..... 420

352. Sample job for trace data set allocation..... 421

Tables

1. Syntax examples..... xxxiv

2. Batch Jobs Used by the HCD Dialog..... 26

3. Online Help Information..... 57

4. Result of the Transfer (Move) Partition Configs Action..... 90

5. Operating System Syntax.....253

6. NIP consoles Syntax..... 253

7. EDT Syntax..... 254

8. Esoteric Syntax.....255

9. Generic Syntax..... 255

10. Switch Syntax.....256

11. Port Syntax.....257

12. Switch Configuration Syntax.....258

13. Port Configuration Syntax.....258

14. Processor Syntax..... 260

15. Channel subsystem and partition Syntax.....261

16. PCIe Function Syntax.....263

17. Channel Path Syntax.....265

18. Control Unit Syntax..... 268

19. Device Syntax.....270

20. Actions on IODF Objects.....273

21. Standard DD names Used by HCD.....318

22. CBD.CPC.IPLPARM access authority and HCD IPL attribute management functions..... 322

23. CBD.CPC.IOCDS access authority and HCD IOCDS management functions..... 323

24. Description of the columns in the Control Unit Detail Report..... 347

25. Symptoms of system problems..... 387

26. Search Argument..... 389

27. Problem Data..... 389

28. Search Argument..... 390

29. Problem Data..... 390

30. Search Argument..... 390

31. Problem Data..... 391

32. Search Argument..... 391

33. Problem Data..... 391

34. Search Argument..... 392

35. Search Argument..... 392

36. Problem Data..... 392

37. Problem Data..... 393

38. Problem Data..... 395

39. Search Argument..... 396

40. Problem Data..... 396

41. Search Argument..... 396

42. Problem Data..... 397

43. Search Argument..... 397

44. Problem Data..... 397

45. Problem Data..... 401

46. Where to find HCD messages..... 402

47. Used registers and passed parameters..... 411

48. Summary of Request Block Names and Related Constants..... 412

49. Functions provided by the HOM services.....414

About this document

This document explains how to use Hardware Configuration Definition (HCD) to accomplish the following:

- Define new hardware configurations
- Modify existing hardware configurations
- View existing hardware configurations
- Activate configurations
- Query supported hardware
- Maintain IODFs
- Compare two IODFs
- Compare an IODF with an actual configuration
- Print reports of configurations
- Create graphical reports of a configuration
- Migrate existing configuration data

Note

Unless otherwise noted, the term **MVS™** as used in this document refers collectively to the older MVS operating system as well as to its successors OS/390® and z/OS, in which MVS is one of the basic components. For purposes of this document, MVS used alone and without reference to a specific release is to be understood as the generic operating system type supported by HCD.

Who this document is for

This document is for the person who is responsible for defining the hardware configuration for IBM Z® servers and for defining the software configuration for z/OS Systems. It is assumed that:

- The person has a basic knowledge of z/OS, and hardware configuration.
- Configuration planning has been completed *before* HCD is used to enter definition data. For information on configuration planning, refer to *z.OS HCD Planning*.

For the person responsible for problem determination, this document also explains what to do if a problem arises with HCD.

This information is for system programmers and system operators.

Related information

Please see the *z/OS Information Roadmap* for an overview of the documentation associated with z/OS.

To view, search, and print z/OS publications, go to the z/OS Internet library (www.ibm.com/servers/resourcelink/svc00100.nsf/pages/zosInternetLibrary).

Softcopy documentation is available as online collection kit that is available in compressed format for download from the IBM Publications Center (www.ibm.com/e-business/linkweb/publications/servlet/pbi.wss).

How to use this document

Before you start to use HCD, you should read

- Chapter 1, “Hardware configuration definition - What is it?,” on page 1 and
- Chapter 5, “How to use the dialog,” on page 49.

© Copyright IBM Corp. 1994, 2022

These topics provide information about the general concepts and facilities of HCD.

If you want to use HCD to define a new configuration, you should read

- Chapter 5, “How to use the dialog,” on page 49,
- Chapter 6, “How to define, modify, or view a configuration,” on page 65, and
- Chapter 7, “How to work with switches,” on page 143.

Chapter 5, “How to use the dialog,” on page 49explains how to use the HCD panels, get online help information, enter data and select items such as tasks, objects and actions. Chapter 6, “How to define, modify, or view a configuration,” on page 65 and Chapter 7, “How to work with switches,” on page 143 explain how to define operating system (OS) configurations, processors, control units, I/O devices, and switches.

How this document is organized

Chapter 1, “Hardware configuration definition - What is it?,” on page 1 explains how HCD fits into the context of hardware configurations and systems management. It also explains the environment in which HCD is used.

Chapter 2, “Migration,” on page 11 discusses how to move from a previous HCD release to HCD under z/OS. It also refers to other sections in this document dealing with migration and conversion tasks.

Chapter 3, “How to set up, customize and start HCD,” on page 13 provides information on how to install, customize, and start HCD, and how to set up an HCD installation for the first time in z/OS.

Chapter 4, “How to work with I/O definition files (IODF),” on page 29 explains how to work with I/O definition files (IODFs), for example, creating, changing, viewing, and deleting them. It also explains how to use configuration packages to create subset IODFs for distribution.

Chapter 5, “How to use the dialog,” on page 49 explains the general facilities of the HCD dialog, that is panels, online help, navigation, making selections, and entering data.

Chapter 6, “How to define, modify, or view a configuration,” on page 65 explains the navigation through the HCD dialog and how to define, change, copy, delete, and view operating system configurations, processors, control units, and devices. It also explains how to prime processor, control unit, and device data.

Chapter 7, “How to work with switches,” on page 143 includes basic information about switches and explains how to define, change, prime, and delete switches, how to define and prime switch connections (ports), and how to work with switch configurations. It also describes how to migrate, activate, and save switch configuration data.

Chapter 8, “How to work with I/O Autoconfiguration,” on page 159 explains how to perform automatic discovery and definition of switched FICON® connected DASDs and tape control units and devices. Also, it describes how to specify options and policies how HCD should process the automatic I/O configuration.

Chapter 9, “How to activate or process configuration data,” on page 175 explains how to make a configuration available for use by the system. It further explains how to compare a configuration defined in an IODF with the configuration sensed on the system. It includes information on activating a configuration dynamically, activating a configuration sysplex-wide, and on remote IOCDS management functions.

Chapter 10, “How to print and compare configuration data,” on page 217 explains how to build textual and graphical reports about channel subsystem, switch, and operating system configuration, I/O paths, and CTC definitions and how to compare IODFs. It also explains how to print the data that is currently displayed on a list panel.

Chapter 11, “How to query supported hardware and installed UIMs,” on page 233 explains how to use HCD to view system data.

Chapter 12, “How to migrate existing input data sets,” on page 239 contains information for migrating existing IOCP/MVSCP/HCPRIO definitions and explains the steps in the migration process.

Chapter 13, “How to invoke HCD batch utility functions,” on page 289 describes the HCD programming interface.

Chapter 14, “Security and other considerations,” on page 321 provides information on various HCD-related topics.

Appendix A, “How to navigate through the dialog,” on page 331 illustrates the flow from the HCD main panel options and the various actions that can be taken from each option.

Appendix B, “Configuration reports,” on page 337 contains examples of the various reports that can be printed by using HCD.

Appendix C, “Problem determination for HCD,” on page 387 explains what to do if problems occur with HCD.

Appendix D, “HCD object management services,” on page 411 explains how to use the HCD application programming interface to retrieve configuration data, such as switch data, device type, or control unit type, from the IODF.

Appendix E, “Establishing the host communication,” on page 417 describes how to set up TCP/IP definitions for z/OS target systems as a prerequisite for working with CPC images, or how to link the host and the workstation if you want to work with HCM.

How to read syntax diagrams

This section describes how to read syntax diagrams. It defines syntax diagram symbols, items that may be contained within the diagrams (keywords, variables, delimiters, operators, fragment references, operands) and provides syntax examples that contain these items.

Syntax diagrams pictorially display the order and parts (options and arguments) that comprise a command statement. They are read from left to right and from top to bottom, following the main path of the horizontal line.

For users accessing the Information Center using a screen reader, syntax diagrams are provided in dotted decimal format.

Symbols

The following symbols may be displayed in syntax diagrams:

Symbol
Definition

►►──
Indicates the beginning of the syntax diagram.

──►
Indicates that the syntax diagram is continued to the next line.

►──
Indicates that the syntax is continued from the previous line.

──►◄
Indicates the end of the syntax diagram.

Syntax items

Syntax diagrams contain many different items. Syntax items include:

- Keywords - a command name or any other literal information.
- Variables - variables are italicized, appear in lowercase, and represent the name of values you can supply.
- Delimiters - delimiters indicate the start or end of keywords, variables, or operators. For example, a left parenthesis is a delimiter.

- Operators - operators include add (+), subtract (-), multiply (*), divide (/), equal (=), and other mathematical operations that may need to be performed.
- Fragment references - a part of a syntax diagram, separated from the diagram to show greater detail.
- Separators - a separator separates keywords, variables or operators. For example, a comma (,) is a separator.

Note: If a syntax diagram shows a character that is not alphanumeric (for example, parentheses, periods, commas, equal signs, a blank space), enter the character as part of the syntax.

Keywords, variables, and operators may be displayed as required, optional, or default. Fragments, separators, and delimiters may be displayed as required or optional.

Item type
Definition

Required
Required items are displayed on the main path of the horizontal line.

Optional
Optional items are displayed below the main path of the horizontal line.

Default
Default items are displayed above the main path of the horizontal line.

Syntax examples

The following table provides syntax examples.

Table 1. Syntax examples

Item	Syntax example
Required item. Required items appear on the main path of the horizontal line. You must specify these items.	▶▶─ KEYWORD ── required_item ─▶◀
Required choice. A required choice (two or more items) appears in a vertical stack on the main path of the horizontal line. You must choose one of the items in the stack.	▶▶─ KEYWORD ┬─ required_choice1 ─┬─▶◀ └─ required_choice2 ─┘
Optional item. Optional items appear below the main path of the horizontal line.	▶▶─ KEYWORD ┬─────────────┬─▶◀ └─ optional_item ─┘
Optional choice. An optional choice (two or more items) appears in a vertical stack below the main path of the horizontal line. You may choose one of the items in the stack.	▶▶─ KEYWORD ┬─────────────────┬─▶◀ ├─ optional_choice1 ─┤ └─ optional_choice2 ─┘
Default. Default items appear above the main path of the horizontal line. The remaining items (required or optional) appear on (required) or below (optional) the main path of the horizontal line. The following example displays a default with optional items.	┌─ default_choice1 ─┐ ▶▶─ KEYWORD ┼──────────────┼─▶◀ ├─ optional_choice2 ─┤ └─ optional_choice3 ─┘
Variable. Variables appear in lowercase italics. They represent names or values.	▶▶─ KEYWORD ── *variable* ─▶◀

Table 1. Syntax examples (continued)

Item	Syntax example
Repeatable item. An arrow returning to the left above the main path of the horizontal line indicates an item that can be repeated. A character within the arrow means you must separate repeated items with that character. An arrow returning to the left above a group of repeatable items indicates that one of the items can be selected,or a single item can be repeated.	KEYWORD repeatable_item KEYWORD , repeatable_item
Fragment. The fragment symbol indicates that a labelled group is described below the main syntax diagram. Syntax is occasionally broken into fragments if the inclusion of the fragment would overly complicate the main syntax diagram.	KEYWORD fragment **fragment** ,required_choice1 ,required_choice2 ,default_choice / ,optional_choice

How to send your comments to IBM

We invite you to submit comments about the z/OS product documentation. Your valuable feedback helps to ensure accurate and high-quality information.

Important: If your comment regards a technical question or problem, see instead "If you have a technical problem" on page xxxvii.

Submit your feedback by using the appropriate method for your type of comment or question:

Feedback on z/OS function
If your comment or question is about z/OS itself, submit a request through the IBM RFE Community (www.ibm.com/developerworks/rfe/).

Feedback on IBM® Documentation
If your comment or question is about the IBM Documentation functionality, for example search capabilities or how to arrange the browser view, send a detailed email to IBM Documentation at ibmdoc@us.ibm.com.

Feedback on the z/OS product documentation and content
If your comment is about the information that is provided in the z/OS product documentation library, send a detailed email to mhvrcfs@us.ibm.com. We welcome any feedback that you have, including comments on the clarity, accuracy, or completeness of the information.

To help us better process your submission, include the following information:

- Your name, company/university/institution name, and email address
- The following deliverable title and order number: z/OS HCD User's Guide, SC34-2669-50
- The section title of the specific information to which your comment relates
- The text of your comment.

When you send comments to IBM, you grant IBM a nonexclusive authority to use or distribute the comments in any way appropriate without incurring any obligation to you.

IBM or any other organizations use the personal information that you supply to contact you only about the issues that you submit.

If you have a technical problem

If you have a technical problem or question, do not use the feedback methods that are provided for sending documentation comments. Instead, take one or more of the following actions:

- Go to the IBM Support Portal (support.ibm.com).
- Contact your IBM service representative.
- Call IBM technical support.

© Copyright IBM Corp. 1994, 2022

Summary of changes

Summary of changes for z/OS Version 2 Release 5 (V2R5)

The following changes are made for z/OS Version 2 Release 5 (V2R5).

New server

The IBM z16™ is the newest IBM zSystems server.

For the IBM z16™ server, you no longer need to define type 'FW' partitions or 'MCS_1' partitions. This firmware partition functionality is included in the IBM z16 server.

As a result, the following HCD actions are no longer supported on the IBM z16 server:

- Defining or displaying 'FW' partitions. Any attempt to do so results in an error message.
- Auto-defining the 'FW' partitions during processor creation or when you build the production I/O definition file (IODF).
- Defining partitions 11-15 (0xB - 0xF) in the highest channel subsystem. These partitions are reserved for IBM use. For other channel subsystems, you can continue to define up to 15 partitions (0x1 - 0xF).
- Generating the 'FW' partitions during the creation of an I/O configuration program (IOCP) deck.

For more information about FW/MCS_1 partitions, see Table 15 in *IOCP Configuration User's Guide*.

Support of Alternate Subchannel Sets for z/VM operating systems

HCD allows devices that are assigned to Operation System Definitions of type VM to be in an alternate subchannel set. For a list of devices that support this operation, check the supported hardware report.

Hardware only dynamic activation

HCD allows the editing of IODF names for the active IODF during hardware only dynamic activation.

Virtual function number prompt

When prompting for a virtual function number when defining a new PCIe function, HCD now includes that port number when determining the allowed values.

Removal of processor support

HCD removed support for the following processors as they went out of service:

- IBM z9® BC (processor type 2096)
- IBM z9 EC (processor type 2094)
- IBM z10 BC (processor type 2098)
- IBM z10 EC (processor type 2097)

Before upgrading to this HCD release, you must remove processor configurations for these processor types from your IODF.

© Copyright IBM Corp. 1994, 2022

Summary of changes for z/OS Version 2 Release 4 (V2R4)

The following changes are made for z/OS Version 2 Release 4 (V2R4).

Alternate Subchannel Set support for Linux

HCD provides the possibility for device owners who are responsible for UIMs to configure their devices in an alternate subchannel set for the hardware connection independent of the operating system (z/OS, z/VM®) support.

Remove Support of the I/O Operations of the IBM Z Systems Automation product

The IBM Z System Automation product component I/O Operations is no longer in service. Therefore, all references and related functions in HCD are removed. The removal includes the tasks to migrate and activate switch configurations, priming of processors, control units, devices, and switch information, as well as using I/O Ops as input, for example, for the HCD I/O Path report.

Removal of ESCON information

ESCON technology is no longer supported. All references to such configuration are removed.

Removal of processor support

HCD removed support for the following processors as they went out of service:

- IBM z800 (processor type 2064)
- IBM z900 (processor type 2066)
- IBM z990 (processor type 2084)
- IBM z890 (processor type 2086).

Before migrating to this HCD release, you need to remove processor configurations for these processor types from your IODF.

Summary of changes for z/OS Version 2 Release 3 (V2R3)

The following changes are made for z/OS Version 2 Release 3 (V2R3).

z/OS V2R2 was the last release with LDAP back end support for HCD and therefore the LDAP chapter has been removed from the HCD User's Guide.

Hardware Support

Support of new PCIe functions:

1. The processor supports a new PCIe function type called zHyperLink (HYL). They require a new PCIe function attribute for identifying a port on the adapter to which the function is related.
2. The processor supports a new PCIe function type called RoCE-2 (ROC2). Similar to the existing RoCE adapter as it is a network adapter that supports a port attribute. Each port connects to one network and there can only be one PNETID being defined for that adapter.

New chpid type - CL5:

A new coupling link for extended distances is supported as a new chpid type CL5. The new adapter card is a mixture of a HCA (host communication adapter) and a 'normal' chpid. It is defined by a combination of PCHID and PORT attributes.

Processor support:

HCD supports the following IBM z13® and z14 processor families:

- processor types 2964-N30, -N63, -N96, -NC9, -NE1 (support level H161231)

- processor types 2965-N10, -N20 (support level H161231)
- processor types 3906-M01, -M02, -M03, -M04, -M05 (support level H170913)
- processor types 3906-LM1, -LM2, -LM3, -LM4, -LM5 (support level H170913)

Chapter 1. Hardware configuration definition - What is it?

Overview

This topic explains:

- What HCD is and how it differs from MVSCP and IOCP
- What HCD offers you
- How HCD works
- The environment in which HCD operates

What HCD is and how it differs from MVSCP and IOCP

The channel subsystem (CSS) and the IBM z/OS operating system need to know what hardware resources are available in the computer system and how these resources are connected. This information is called *hardware configuration*.

Hardware Configuration Definition (HCD) provides an interactive interface that allows you to define the hardware configuration for both a processor's channel subsystems and the operating system running on the processor.

Before HCD was available, you had to use IOCP to define the hardware to the channel subsystem and the MVS Configuration Program (MVSCP) to define the hardware to the MVS operating system. The following sections explain in what way HCD differs from MVSCP and IOCP when defining, validating and reconfiguring configuration data.

Definition of configuration data

This topic informs about the differences between MVSCP and IOCP on the one hand and HCD on the other hand when performing the task of defining configuration data.

How MVSCP and IOCP worked

With MVSCP and IOCP you were limited to defining one processor or operating system per input data set. This meant that you needed more than one data set when you used MVSCP or IOCP.

Figure 1 on page 2 illustrates the definition process using several sources for writing and modifying the hardware configuration using IOCP and MVSCP data sets.

© Copyright IBM Corp. 1994, 2022

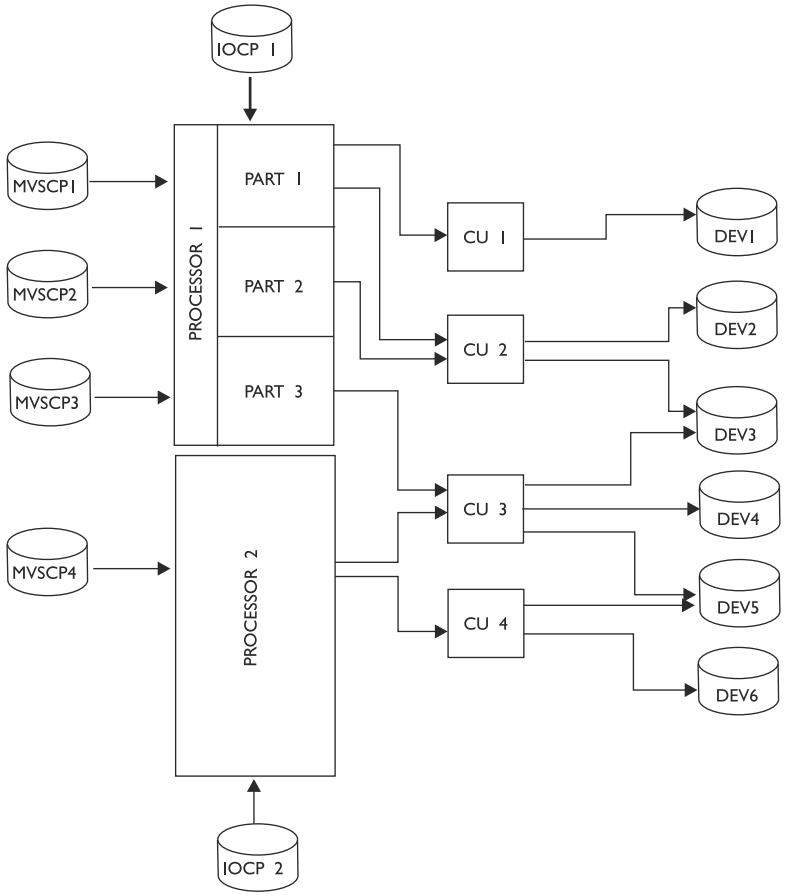

Figure 1. Multiple data set configuration definition without HCD

What HCD does

The configuration you define with HCD may consist of multiple processors with multiple channel subsystems, each containing multiple partitions. HCD stores the entire configuration data in a central repository, the ***input/output definition file (IODF)***. The IODF as single source for all hardware and software definitions for a multi-processor system eliminates the need to maintain several independent MVSCP or IOCP data sets. That means that you enter the information only once using an interactive dialog.

Figure 2 on page 3 illustrates the definition process using one source for writing and modifying configuration data in the IODF.

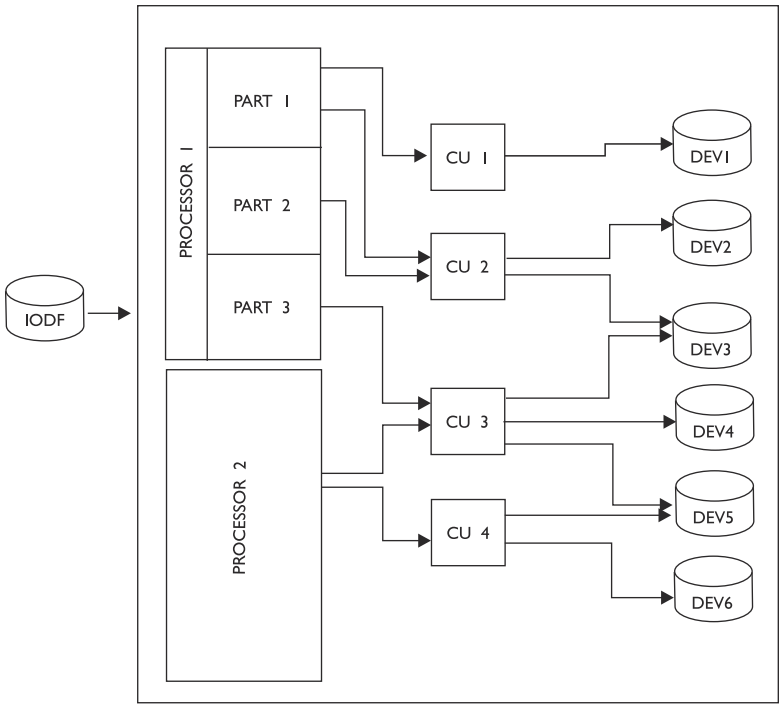

Figure 2. Single data set configuration definition with HCD

Validation of configuration data

How MVSCP and IOCP worked

MVSCP and IOCP were separately running independent programs. Prior to IPL it was not checked whether the MVSCP output matched the configuration in the I/O configuration data set (IOCDS). Even if the definitions of both programs were not identical, it was possible for an IPL to be successful if the devices needed to start the system were included in both programs. Therefore, discrepancies would be detected only after the system had been running for some time. Such a discovery could have happened at a very inconvenient moment.

What HCD does

The data entered with HCD is validated and checked for consistency and completeness. Because the check is performed when the data is defined, rather than when the device is accessed, inconsistencies can be corrected right away, and unplanned system outages resulting from inconsistent definitions can be avoided.

If you include FICON Director definitions in the IODF, HCD also validates the switch port usage and connection information for all devices and channels connected to each of the directors in the configuration. In addition, HCD validates the complete path from the processor through the switch to the control unit and device.

Planned I/O paths, as defined in an IODF, can be checked against the active configuration on the system. Discrepancies are indicated and can be evaluated before and after the IODF is activated.

Reconfiguration of configuration data

How MVSCP and IOCP worked

The IOCP updated the input/output configuration data set (IOCDS) that resided in the hardware support processor. This information was loaded into the hardware system area during power-on reset (POR). If

the configuration was changed, it was necessary to write a new IOCDS using IOCP and to load it into the hardware system area with a POR.

MVSCP created the control information (such as UCBs, EDTs, and NIPCONs) needed by MVS to describe the hardware configuration and stored this information in the SYS1.NUCLEUS data set. The nucleus information was loaded at IPL time into storage. If a change was made to the I/O configuration, it was necessary to IPL to make the information available to MVS.

What HCD does

Dynamic reconfiguration management is the ability to select a new I/O configuration during normal processing and without the need to perform a power on reset (POR) of the hardware or an initial program load (IPL) of the z/OS operating system.

The ability of HCD to provide equivalent hardware and software I/O definitions and to detect when they are not in sync is essential for dynamic I/O reconfiguration management. HCD compares both the old and the new configuration and informs the hardware and software about the differences. You may add, delete, and modify definitions for channel paths, control units and I/O devices without having to perform a POR or an IPL.

What HCD offers you

This section summarizes what you can do with HCD and how you can work with HCD.

Single Point of Control: With HCD you have a single source, the IODF, for your configuration data. This means that hardware and software definitions as well as FICON director definitions can be done from HCD and can be activated with the data stored in the IODF.

Increased System Availability: HCD checks the configuration data when it is entered and therefore reduces the chance of unplanned system outages due to inconsistent definitions.

Changing Hardware Definitions Dynamically: HCD offers dynamic I/O reconfiguration management. This function allows you to change your hardware and software definitions on the fly - you can add devices, or change devices, channel paths, and control units, without performing a POR or an IPL. You may also perform software-only changes, even if the hardware is not installed.

Sysplex Wide Activate: HCD offers you a single point of control for systems in a sysplex. You can dynamically activate the hardware and software configuration changes for systems defined in a sysplex.

Migration Support: HCD offers a migration function that allows you to migrate your current configuration data from IOCP, MVSCP, and HCPRIO data sets into HCD. Migration support also allows you to make bulk changes to the configuration using an editor on the IOCP/MVSCP/HCPRIO macro statements.

Accurate Configuration Documentation: The actual configuration definitions for one or more processors in the IODF are the basis for the reports you can produce with HCD. This means that the reports are accurate and reflect the up-to-date definition of your configuration.

HCD provides a number of textual reports and graphical reports, that can be either printed or displayed. The printed output can be used for documentation purposes providing the base for further configuration planning tasks. The display function allows you to get a quick overview of your logical hardware configuration.

Guidance through Interactive Interface: HCD provides an interactive user interface, based on ISPF, that supports both the hardware and the software configuration definition functions. The primary way of defining the configuration is through the ISPF dialog. HCD consists of a series of panels that guide you through all aspects of the configuration task. The configuration data is presented in lists.

HCD offers extensive online help and prompting facilities. Help includes information about panels, commands, data displayed, available actions, and context-sensitive help for input fields. A fast path for experienced users is also supported.

Batch Utilities: In addition to the interactive interface, HCD also offers a number of batch utilities. You can use these utilities, for instance, to migrate your existing configuration data; to maintain the IODF; or

to print configuration reports. For a complete list of batch utility functions, refer to Chapter 13, “How to invoke HCD batch utility functions,” on page 289.

Cross Operating System Support: HCD allows you to define both MVS type and VM type configurations from z/OS and to exchange IODFs between z/OS HCD and z/VM HCD.

Support of processor clusters: HCD provides single point of control functions in a processor cluster for dynamic I/O configuration changes and for the management of IOCDSs and IPL attributes. These functions assist users in configuring and operating those processors that are configured in a processor cluster controlled by the same Hardware Management Console (HMC).

How HCD works

HCD stores the hardware configuration data you defined in the IODF. A single IODF can contain definitions for several processors (or LPARs) and several MVS or VM operating systems. It contains all information used to create IOCDSs and the information necessary to build the UCBs and EDTs. When HCD initiates the function to build the IOCDS, the IODF is used as input. The IOCDS with the channel subsystem definitions of a processor is then used to perform POR. The same IODF is used by MVS to read the configuration information directly from the IODF during IPL. If your environment includes z/OS and z/VM on different processors or as logical partitions on the same processor, the IODF can also be used to document the z/VM configuration.

Figure 3 on page 5 shows an example of a configuration using HCD.

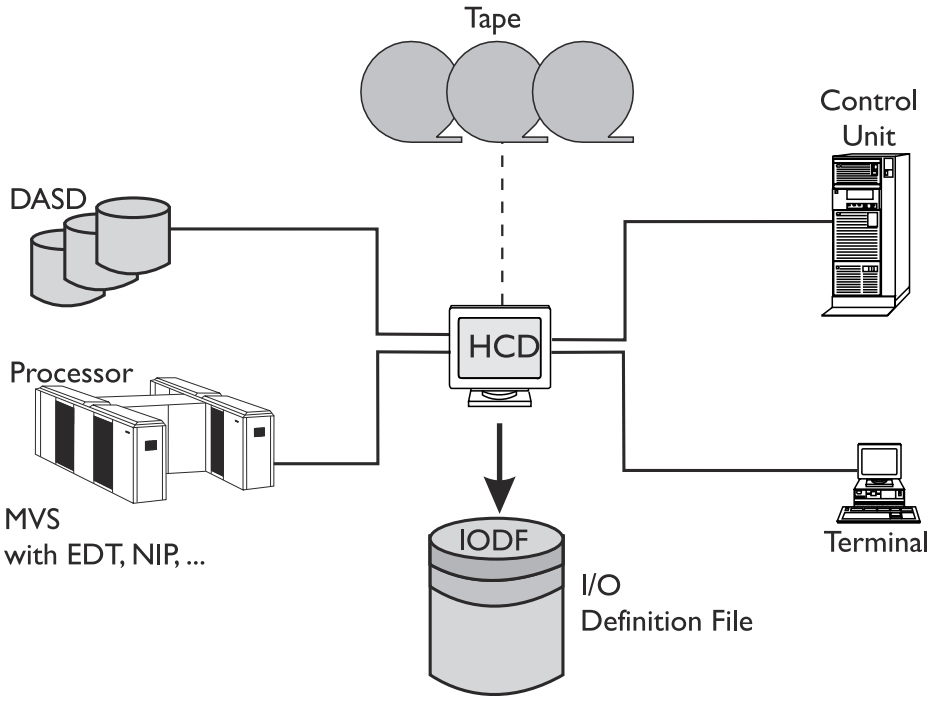

Figure 3. Configuration definition with HCD

Objects managed in the IODF

HCD lets you define the configurations as objects and their connections. The following objects and their connections are managed by HCD:

```
IODF
├─Operating System
│  ├─EDT (MVS-type only)
│  │  ├─Esoteric (MVS-type only)
│  │  └─Generic (MVS-type only)
│  └─Console
├─Switch
│  ├─Switch Configuration
│  └─Port
├─Processor
│  ├─PCIe Function
│  └─Channel Subsystem
│     ├─Partition
│     └─Channel Path
├─Control Unit
└─Device
```

Figure 4. Objects managed by HCD

For all these objects the HCD dialog provides action lists where you can define the characteristics and the relation between the objects.

IODF used at IPL

After you complete the input of your configuration data, you have to build a production IODF. The production IODF is used by the operating system to build the configuration data (for example, control blocks) at IPL time. This active production IODF is also used for building the IOCDS.

Figure 5 on page 6 illustrates the build phase of a production IODF and of an IOCDS.

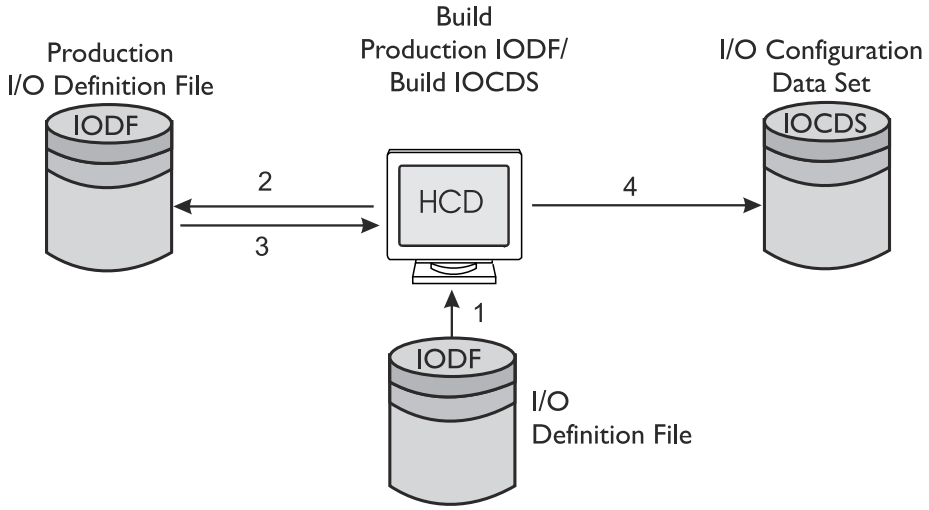

Figure 5. Building a production IODF and an IOCDS

The production IODF cannot be updated (read-only). This ensures that the data in the production IODF used at IPL remains the same during the run time of that system.

Relationship of data sets used by HCD

Figure 6 on page 7 shows the relationship between the data sets used by HCD and how you can work with or change these data sets.

By using the define and modify tasks or by migrating MVSCP, IOCP, and HCPRIO input data sets you create a work IODF. After finishing the definition, you build a production IODF from your work IODF, which you can use to IPL your system or to activate your configuration dynamically. The data sets shown at the bottom of the figure are created by the appropriate tasks like Build IOCDS, Build IOCP input data set, Build HCPRIO input data set, and Activate switch configuration.

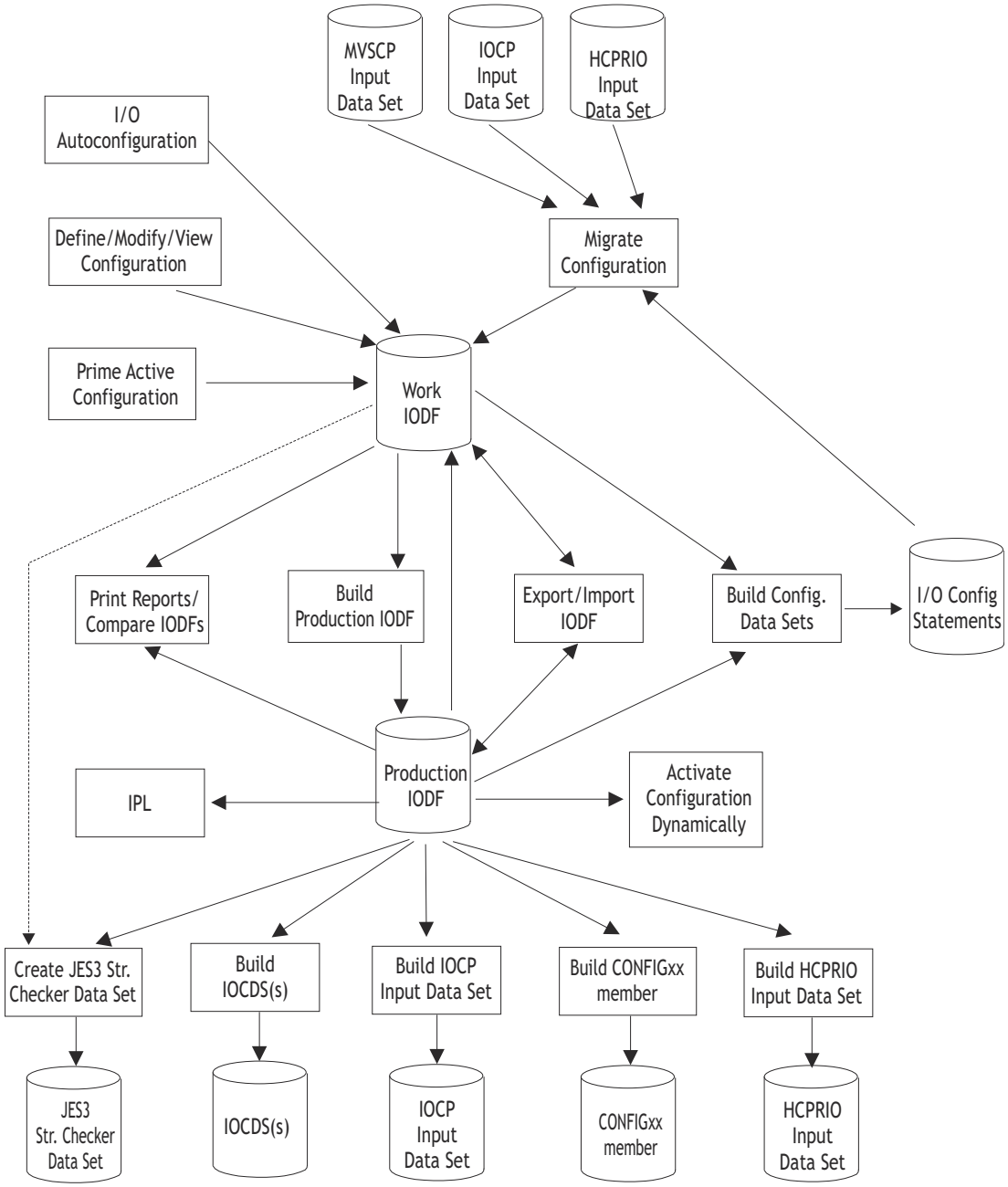

Figure 6. Relationship of data sets used by HCD

The environment in which HCD operates

HCD is part of z/OS. It needs a running z/OS system before it can be used to define a hardware configuration. Therefore, an installation should first load a z/OS system, using an old IODF, or a ServerPac Starter IODF to IPL the z/OS system for the first time. HCD can then be used on that system to define the full configuration.

HCD uses the unit information modules (UIMs) of z/OS. UIMs contain device dependent information, such as parameters and features of devices. The UIMs must be installed in the z/OS system before you use HCD to define a configuration. The UIMs are also used at IPL time to build the UCBs. That is why they have to be installed in SYS1.NUCLEUS at IPL time.

UIMs are provided for the IBM devices supported by z/OS device product owners. You can write your own UIMs for non-IBM devices. To get information about UIMs, see *z/OS MVS Device Validation Support*.

HCD and the coupling facility

HCD provides the user interface to support processors that have coupling facility capability.

The coupling facility itself is implemented as an extension to PR/SM features on selected processors (refer to *z/OS HCD Planning* for a list) and runs in a PR/SM partition. It enables direct communication between processors through a specific communication partition (coupling facility partition), connected by coupling facility channels.

You use HCD to specify whether a logical partition is running a coupling facility or an operating system. New channel path definitions in the IODF are used to connect a coupling facility-capable processor to a coupling facility partition.

The coupling facility peer channel path that accesses either partition bidirectionally on IBM zSeries processors or their successors.

HCD automatically generates the coupling facility (CF) control unit and devices that are necessary for IOCP processing. Figure 7 on page 8 shows a processor configuration with coupling facility implemented.

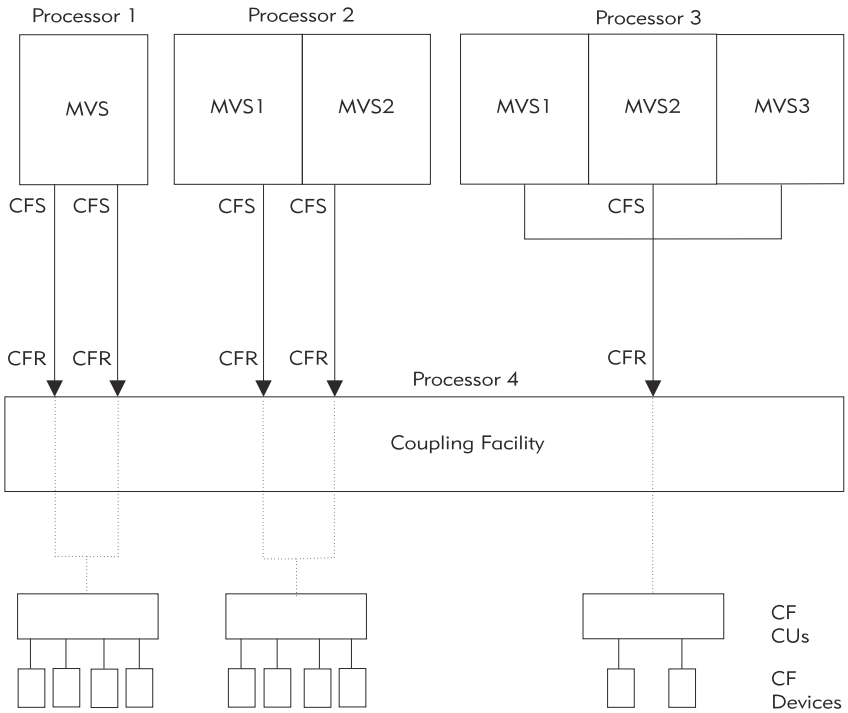

Figure 7. Processor configuration with coupling facility implemented

HCD enables you to dynamically reconfigure the coupling facility channels that are connected to the operating system partition.

Note: With CF duplexing, a CF logical partition can use the coupling facility sender function to communicate with another CF logical partition. That means, you can define sender channel paths (CBS, ICS) besides the receiver channel paths (CBR, ICR) in a CF partition.

For more information on HCD and coupling facility, refer to *z/OS Parallel Sysplex® Overview*.

Support of processor clusters

Note on terminology:

The term processor cluster, used in the HCD dialog and throughout this documentation, refers to central processor complexes (CPCs) controlled through the Hardware Management Console (HMC).

HCD allows you to define and control configuration data for each CPC that is configured in a processor cluster. You use HCD for those CPCs that can have their IOCDS and IPL attribute management and their dynamic I/O configuration changes controlled remotely:

- Writing IOCDSs
- Managing write-protection
- Marking the IOCDS as active POR IOCDS
- Updating IPL address and LOAD parameter values
- Distributing and activating new production IODFs on connected target systems

HCD displays all CPCs that are configured in a processor cluster and controlled by the Hardware Management Console (HMC). The CPCs and the HMC must be connected to the same management network. A CPC is identified by the system network architecture (SNA) address of its support element, which is specified when the processor complex is configured on the HMC. HCD uses the SNA address to be able to write and manage IOCDSs from any processor in a processor cluster to view and update IPL attributes, and to perform hardware only dynamic activation of configuration changes.

From the **Processor Cluster List** on a single point of control, users can select an option to list all logical partitions (images) belonging to the current CPC along with various information for each partition, for example, their operation status (deactivated, activated, IPLed), the system name, sysplex name, operating system type and release level.

If users provide a connection table that contains the IP addresses and user logon data on the target systems, HCD shows the corresponding activation status and allows distributing and activating new production IODFs on those systems.

Support of the sysplex environment

If you have interconnected systems, it is important to have a single point of control for systems in such a sysplex environment. HCD offers the support of the sysplex environment in several ways:

- You can define all processor and operating system configurations in one IODF.
- After a complete definition you can download the IOCDSs for all processors. This can be initiated from the controlling HCD.
- If you want to change configurations dynamically within the sysplex, you can initiate the activation of the hardware and software configuration changes for systems defined in a sysplex from the controlling HCD.

In addition, HCD offers a function that compares the active I/O configuration against the defined configuration in an IODF. This function can produce reports or lists of I/O paths to show the sensed data against the logical definitions of the paths in the IODF. HCD provides this function to get the data for your local system and for systems in a sysplex.

Based on a production IODF, HCD can also build CONFIGxx members for your local system or for systems in the sysplex.

For systems which are members of a sysplex, CONFIGxx members can be verified against selected systems. Responses are displayed in a message list.

Refer to Chapter 13, “How to invoke HCD batch utility functions,” on page 289, if you want to run batch jobs in a sysplex environment.

Chapter 2. Migration

Overview

This topic explains:

- An overview of the migration process
- Steps needed for migrating to HCD for z/OS Version 2 from an earlier HCD release

Migration overview

Your plan for migrating to the new level of HCD should include information from a variety of sources. These sources of information describe topics such as coexistence, service, hardware and software requirements, installation and migration procedures, and interface changes.

The following documentation provides information about installing your z/OS system. In addition to specific information about HCD, this documentation contains information about all of the z/OS elements.

- *z/OS Planning for Installation*

  This book describes the installation requirements for z/OS at a system and element level. It includes hardware, software, and service requirements for both the driving and target systems. It also describes any coexistence considerations and actions.

- *ServerPac Installing Your Order*

  This is the order-customized installation book for using the ServerPac Installation method. Be sure to review "Appendix A. Product Information", which describes data sets supplied, jobs or procedures that have been completed for you, and product status. IBM may have run jobs or made updates to PARMLIB or other system control data sets. These updates could affect your migration.

- *z/OS Upgrade Workflow*

  This document describes how to migrate to the current z/OS version and release from prevoius releases for all z/OS elements and features and also includes migration actions for HCD.

“Migration roadmap” on page 11

- identifies the migration paths that are supported with the current level of HCD
- describes the additional publications that can assist you with your migration to the current level

Migration roadmap

This section describes the migration paths that are supported by the current release of HCD. It also provides information about how to migrate to the current HCD release from previous releases.

You can find further migration information in *z/OS Upgrade Workflow*.

Security migration

HCD uses the application ID CBDSERVE to verify any user that logs on to the HCD agent, this is, any user who uses HCDs HMC wide activate function and users who use HCM to perform hardware configuration definitions. If you have the APPL class active in your external security manager, for example in RACF®, and you have a generic profile in that class that covers the new HCD application ID CBDSERVE, you need to permit all users READ access to that profile. Otherwise user are no longer able to log on to HCD. If you use the existing generic APPL profile for other purposes, you may define your own CBDSERVE profile in the APPL class to control access specific for HCD. For details see “Controlling access to HCD services” on page 418.

© Copyright IBM Corp. 1994, 2022

Migration tasks

The following sections contain additional migration procedures or information:

- “Upgrade an IODF” on page 40
- “IODF release level compatibility” on page 47
- “IOCP input data sets using extended migration” on page 187
- Chapter 12, “How to migrate existing input data sets,” on page 239
- “Upgrade IODF” on page 292
- “Migrate I/O configuration statements” on page 292

Information on IODF coexistence can be found in “IODF release level compatibility” on page 47.

Chapter 3. How to set up, customize and start HCD

Overview

This information unit handles the following topics:

- “Setting up HCD” on page 13
- “Tailoring the CLIST CBDCHCD” on page 15
- “Starting and ending HCD” on page 16
- “Defining an HCD profile” on page 16
- “Customizing HCD EXEC procedures” on page 26

Setting up HCD

HCD is a base element of z/OS and therefore installed with the z/OS product. For more information, refer to *z/OS Planning for Installation*.

The installation of HCD is carried out using SMP/E. The install logic and the JCLIN are provided by HCD.

Setting up HCD requires the following steps:

1. Install z/OS with the HCD FMIDs.
2. Install other products that are required for HCD (refer to *z/OS Planning for Installation*).
3. Before you start HCD, you have to set up the load libraries that contain the HCD help modules. You can achieve this in one of the following ways:
   - Include SYS1.SCBDHENU (or SYS1.SCBDHJPN for Kanji) in the linklist concatenation (LNKLSTxx member), or
   - Allocate data set SYS1.SCBDHENU (or SYS1.SCBDHJPN for Kanji) to ISPLLIB.

   If you choose to access the libraries through the ISPLLIB concatenation, ISPLLIB must be allocated prior to invoking ISPF with the TSO ALLOC command or through a CLIST. ISPLLIB is used as a tasklib by ISPF as it is searched first.

   When using the View graphical configuration report:
   - Include the GDDM load library in the linklist concatenation (LNKLSTxx member).
   - Allocate the GDDM sample data set:

     ```
     ALLOCate F(ADMPC) DSN('pplib.GDDM.SGDDMSAM') SHR REUSE
     ```

     If you are using a programmable workstation and you communicate with the host using a 3270 emulator session, the GDDM-OS/2 link files must be installed on your workstation. Note that the high-level qualifier for the GDDM data set might vary from installation to installation.
4. Allocate the data set SYS1.SCBDCLST to the SYSPROC ddname concatenation.

   Note: SYS1.SCBDCLST has a fixed record format (RECFM=FB). If your other SYSPROC data sets have a variable record format (RECFM=V or VB), copy SYS1.SCBDCLST to a data set with variable record format. You have to remove sequence numbers (in the CLIST) after copying the members to a data set with variable record format.
5. For processing large IODFs, and when HCD option IODF_DATA_SPACE is set to N0, the size of your TSO region may not be sufficient. When you specify the region size on the TSO logon panel, calculate as follows:

   ```
                   2 x IODF size + 4 MB
   Example:
   ```

```
Assumed IODF size:  8000 blocks, 4 KB per block = 32 MB

Suggested region size:  68 MB
```

To run HCD, the modules in SYS1.SCBDHENU (containing HCD help members) and SYS1.NUCLEUS (containing the UIMs) must be accessible. For the HCD dialog, you can achieve this in three ways:

1. Include SYS1.SCBDHENU in the linklist concatenation (LNKLSTxx member).
2. Include SYS1.SCBDHENU in the JOBLIB/STEPLIB concatenation of the TSO logon procedure.
3. Include SYS1.SCBDHENU in the ISPLLIB load library concatenation. If you include SYS1.SCBDHENU into the ISPLLIB concatenation, ISPLLIB must be allocated prior to invoking ISPF (in TSO or through JCL in the logon procedure). ISPLLIB is used as a tasklib by ISPF and is searched first. A pure LIBDEF for ISPLLIB does not suffice to invoke HCD.

HCD allocates SYS1.NUCLEUS automatically at initialization time if the keyword `UIM_LIBNAME` is not specified in the HCD profile. You may use the HCD profile to specify a different name and the volume serial number of the library that contains the UIMs (see also “Defining an HCD profile” on page 16). If you do not specify a name in the profile, SYS1.NUCLEUS is assumed as default name for the UIMs. For IPL, however, the UIMs and UDTs must be in SYS1.NUCLEUS.

The following HCD libraries are defined via the ISPF 'ISPEXEC LIBDEF' command if HCD is invoked via CLISTs CBDCHCD and CBDCHCD1:

- SYS1.SCBDPENU for panels
- SYS1.SCBDMENU for messages
- SYS1.SCBDTENU for tables

How to invoke HCD in dialog mode

To invoke HCD in dialog mode, ISPF must be active. After you have invoked ISPF, you can use the CLIST CBDCHCD to activate the HCD function. You may add HCD to an ISPF selection menu, for example, the ISPF/PDF Master Application Menu (ISP@MSTR), and invoke HCD using the CLIST CBDCHCD. Figure 8 on page 15 shows a sample panel that illustrates how to include HCD on the main ISPF/PDF panel. Alternatively, the CLIST can be invoked from the ISPF option 6, or from the command line.

Note that HCD must be invoked with the "NEWAPPL(CBD)" parameter in the CLIST CBDCHCD.

To ensure that the CBDCHCD CLIST can successfully allocate the following libraries, make sure that these libraries are cataloged:

- SYS1.SCBDPENU --> HCD Panel Library
- SYS1.SCBDMENU --> HCD Message Library
- SYS1.SCBDTENU --> HCD Table Library

Note: The HCD Panel, Message, and Table libraries are allocated by the CBDCHCD CLIST using the LIBDEF function of ISPF. If other ISPF Dialogs are using the LIBDEF function of ISPF, and you do not want HCD to overlay their allocations, you can update your ISPF startup by adding the HCD data sets to the ISPF ISPPLIB, ISPMLIB, and ISPTLIB concatenations.

```
%-------------------------  ISPF MASTER APPLICATION MENU  -----------------------
%OPTION  ===>_ZCMD                                            +USERID   - &ZUSER +
%                                                             +TIME     - &ZTIME
%                                                             +TERMINAL - &ZTERM
%                                                             +PF KEYS  - &ZKEYS
%   1 +ISPF/PDF    - ISPF/Program Development Facility
%   2 +SMP/E       - System Modification Program/Extended
%   3 +HCD         - Hardware Configuration Definition
%   4 +SDSF        - SYSTEM Display and Search Facility
%   5 +RACF        - Resource Access Control Facility
%   X +EXIT        - Terminate ISPF using list/log defaults
%
+Enter%END+command to terminate ISPF.
%
)INIT
  .HELP    = ISP00005     /* Help for this master menu             */
  &ZPRIM   = YES          /* This is a primary option menu         */
)PROC
  &ZSEL = TRANS( TRUNC (&ZCMD,'.')
               1,'PANEL(ISR@PRIM)  NEWAPPL(ISR)'
               2,'PGM(GIMSTART) PARM(&ZCMD) NOCHECK NEWAPPL(GIM)'
               3,'CMD(CBDCHCD) PASSLIB'
               4,'PGM(DGTFMD01) PARM(&ZCMD) NEWAPPL(DGT) NOCHECK '
               5,'PANEL(ICHP00) NEWAPPL(RACF)'
              ' ' ' '
                ,
                X,'EXIT'
                *,'?' )
IF (&ZCMD = '%VSDSF')
    &ZSEL = 'PGM(ISFISP) NEWAPPL(ISF)'
)END
```

Figure 8. Sample ISPF Master Application Menu

Tailoring the CLIST CBDCHCD

A sample CLIST CBDCHCD (CBDCHCDJ for Kanji) is provided in SYS1.SCBDCLST to assist you in invoking HCD from the ISPF dialog. It allocates the HCD message log file (HCDMLOG), the trace data set (HCDTRACE), and the HCD term file (HCDTERM) with a default high-level qualifier of the userID (&SYSUID.). The CLIST also allocates the HCD data sets SYS1.SCBDPENU, SYS1.SCBDMENU, and SYS1.SCBDTENU (or SYS1.SCBDPJPN, SYS1.SCBDMJPN, and SYS1.SCBDTJPN for Kanji).

In CBDCHCD and CBDCHCDJ, the ISPEXEC LIBDEF statement for ISPPLIB, ISPTLIB and ISPMLIB is done with the STACK option. This leaves existing LIBDEFs untouched, so that after exit, the existing HCD libraries ISPPLIB, ISPTLIB and ISPMLIB are freed again.

If the prefixes for message, trace, and term data sets do not conform to the installation conventions, you may tailor the CLIST to match your installation defaults. If you want HCD to use your TSO prefix as the high level qualifier, you can call CBDCHCD with the parameter NOPREF(YES). This causes HCD to use the qualifiers &PREFIX..&SYSUID.

CBDCHCD invokes another CLIST, CBDCHCD1. You may tailor this CLIST as well.

In any case, use the application ID for HCD: NEWAPPL(CBD).

The CLIST also tailors the ISPF environment by:

- Setting PFSHOW on. This forces all 24 function keys to be shown (if ISPF is defined to show 24 function keys).
- Setting lower PFKEYS as primary function keys.

Note: HCD can be invoked with the activated TRACE option, when you have specified parameter TRACE(YES) in the default CLIST. The size of the trace data set can be changed by modifying the CLIST. In addition, you can delete the HCD provided trace data set and allocate one according to your specific needs.

Starting and ending HCD

You start HCD like any other ISPF application in your TSO/E system. The procedure for starting an application is different for each installation but you can probably select HCD from a menu of applications that are available in your system. This causes a TSO/E CLIST to be executed. The sample CLIST that is supplied with HCD is CBDCHCD in library SYS1.SCBDCLST.

After you start HCD, the first panel that you see contains a menu of the HCD primary tasks:

```
                          z/OS V2.1 HCD
  Command ===> ____________________________________________________

                              Hardware Configuration

  Select one of the following.

 1 _  0.  Edit profile options and policies
      1.  Define, modify, or view configuration data
      2.  Activate or process configuration data
      3.  Print or compare configuration data
      4.  Create or view graphical configuration report
      5.  Migrate configuration data
      6.  Maintain I/O definition files
      7.  Query supported hardware and installed UIMs
      8.  Getting started with this dialog
      9.  What's new in this release

  For options 1 to 5, specify the name of the IODF to be used.

  I/O definition file . . . 'SYS1.IODF00.HCD.WORK'                 +


 F1=Help     F2=Split    F3=Exit     F4=Prompt   F9=Swap    F12=Cancel
 F22=Command
```

*Figure 9. HCD **Primary Task Selection** panel*

If you select task "1. Define, modify, or view configuration data", as shown in Figure 9 on page 16 and press the Enter key, you trigger this task using the IODF ‘SYS1.IODF00.HCD.WORK’.

To end an HCD session, either return to the ***Primary Task Selection*** panel and press the F12=Cancel key or the F3=Exit key twice or use the fast path command GOTO X.

Note:

1. Chapter 13, “How to invoke HCD batch utility functions,” on page 289 explains how you can invoke HCD from another program using the HCD programming interface.
2. To see a description of new functionality of the current release, select option **9. What's new in this release**. Here you may find information about SPEs that are delivered after the completion of this document.

Defining an HCD profile

Before you start HCD, you can define an HCD profile to tailor HCD supplied defaults and processing options to your specific installation needs. Using a profile is optional and will remain in effect for the entire HCD session. At initialization time, HCD reads the profile and processes each statement in turn.

The profile statements are contained in a data set allocated to the DD name HCDPROF. The following statement allocates the profile data set to HCDPROF:

```
//HCDPROF DD DSN=&SYSUID..HCD.PROFILE,DISP=SHR
```

The following statements allocate the profile data set in USS:

```
tso -t "alloc dsn('$(whoami).HCD.PROFILE') cyl space(2,2) lrecl(80) recfm(f,b) blksize(27920)"
```

```
tso -t "alloc dsn('$(whoami).HCD.TRACE') cyl space(50,1000) lrecl(80) recfm(f,b) blksize(27920)"
```

The data set must have the following characteristics:

- Be either a sequential data set or a member of a partitioned data set
- Have fixed-length, fixed-blocked record format
- Have 80 character records.

The HCD profile comprises the keywords described in "Keywords" on page 19 as well as policies for automatic I/O configuration described in Chapter 8, "How to work with I/O Autoconfiguration," on page 159.

You can use the ***HCD Profile Options*** dialog (see "Working with the HCD Profile Options dialog" on page 18) to edit the profile keywords after having created and allocated the profile data set to HCDPROF.

In addition, you can define profile options manually in the profile data set.

You can extend a comment to the next line by using an asterisk (*) as a continuation character in column 1, as shown in the example:

```
MAP_CUTYPE=9000,NOCHECK /* map CU type 9000 to type NOCHECK */

or:

MAP_CUTYPE=9000,NOCHECK /* map CU type 9000 to type
* NOCHECK                                                 */
```

However, be aware that the ***HCD Profile Options*** dialog truncates comments longer than 32 characters.

It is also possible to define profile options using inline statements in a batch job. The following example shows an inline profile definition:

```
//HCDPROF DD *
MIGRATE_EXTENDED = YES
VM_UIM = NO
/*
```

Note: When starting an HCD batch job from the dialog, the HCD profile data set is not passed automatically to the job but, if required, has to be specified in the JCL.

The following syntax rules apply to a profile statement:

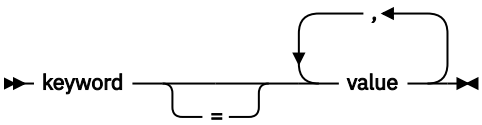

keyword
: is the name of the HCD keyword; each keyword starts on a new line.

=
: can be omitted, if the keyword is followed by a blank.

value
: specifies one or more values to be assigned to the keyword.

Note:

1. A single statement must not exceed 72 characters.
2. Do not use sequence numbers in your HCD profile.
3. Use /* and */ as delimiters for comments in a profile statement.

Working with the HCD Profile Options dialog

You can maintain your HCD profile values in your profile data set using the HCD dialog. Select ***Edit profile options and policies*** from the HCD ***Primary Task Selection*** panel and then select **HCD profile options** from the ***Profile Options and Policies*** menu to invoke the **HCD Profile Options** dialog.

```
                 Profile Options and Policies


 Select type of data to define.

 __  1.  HCD profile options
     2.  Autoconfiguration policies
     3.  LP groups for autoconfiguration
     4.  OS groups for autoconfiguration


  F1=Help     F2=Split    F3=Exit     F9=Swap    F12=Cancel
```

Figure 10. Profile Options and Policies

You can add, delete or modify keywords in your profile data set via this dialog. When you leave the HCD session, HCD writes all changes specified in this dialog to the profile data set.

In this dialog, all HCD profile keywords are listed in alphabetical order, followed to the right by their value and possibly a description (user comment). To see the ***Description*** column, scroll to the right (Shift + PF8).

- If a profile data set exists, HCD reads the contained keywords with their values and, if available, their descriptions. For keywords that are not explicitly defined in your profile data set, HCD shows the defaults.
- If you have no own profile data set allocated, this dialog lists the HCD default values. You cannot change these settings.

Note: The remainder of this section describes the use of the **HCD Profile Options** dialog with an allocated profile data set.

```
                            HCD Profile Options
                                                        Row 1 of 40 More:       >
 Command ===> ___________________________________________ Scroll ===> CSR

 Edit or revise profile option values.

 HCD Profile : DOCU.HCD.PROFILE

 / Profile keyword          A Value +
 # ACTLOG_VOL               Y *
 _ ALLOC_SPACE              Y HCDASMP,60
 _ ALLOC_SPACE              Y HCDRPT,60
 # BATCH_IODF_NAME_CHECK    Y NO
 # BYPASS_UPD_IODF_FOR_SNA  Y YES
 # CHANGE_LOG               N NO
 # CHECK_IODF               Y YES
 # CHLOG_EXTENSION          Y 0
 # CHLOG_VOL                Y *
 # COLOR_BACKGROUND         Y ___________________________________________
 # COLOR_HIGH               Y RED
  F1=Help        F2=Split       F3=Exit        F4=Prompt      F5=Reset
  F7=Backward    F8=Forward     F9=Swap       F12=Cancel     F20=Right
 F22=Command
```

Figure 11. HCD Profile Options

If you change a displayed default value, HCD writes the changed entry into your data set.

The ***HCD Profile Options*** dialog accepts a description (comment) of maximum 32 characters. A comment must start on the same line as the keyword assignment, using the ‘/*’ notation.

If you specified a longer comment in a manually edited profile data set, HCD shows the truncated comment only and also truncates the text in the profile data set the next time, HCD writes any modifications from the dialog.

For profile keywords which may occur multiple times with different value assignments, the dialog offers actions to add or delete selected entries (action codes 'a' or 'd'). Profile keywords which can only occur with a single value assignment are disabled for any action by a # sign in the action column.

Column A: This column is set to Y(es), if a change of the keyword value will become active immediately. Value N(o) denotes that the value change does not become active until the next start of HCD.

Column Value: You can overtype the current values. Also, if you position the cursor on a value in this column, you have the following options:

- Pressing PF4 lets you prompt for available values (PF4) where applicable, and select one value from the offered list.
- By pressing PF1, you can obtain an explanation of the selected keyword.

Figure 12 on page 26 shows the contents of a sample profile data set.

Keywords

The following keywords are supported for a profile statement:

Volume serial number to allocate output data sets

To place the IOCP, HCPRIO, and JES3 INISH stream checker data sets to a specific volume within HCD, you can specify this target volume via two profile options:

HCDDECK_VOL
: Specifies the volume serial number for allocating a new IOCP, HCPRIO or other data set containing I/O configuration statements.

HCDJES3_VOL
: Specifies the volume serial number for allocating a new JES3 initialization stream checker input data set.

In a non-SMS managed environment, the generated corresponding output data set is placed on the indicated volume. The profile option is ignored if the specified output data set already exists on a different volume. In this case, the new output data set replaces the existing data set on this volume. In an SMS-managed environment this option is ignored.

The two options have no effect in an SMS managed environment since SMS overrules the VOLUME parameter.

If the keywords are omitted, the placements of the IOCP, HCPRIO, JES3 INISH, and other I/O configuration data sets are controlled via SMS or ESOTERIC system defaults (ALLOCxx of SYS1.PARMLIB or the UADS, respectively).

Volume serial numbers to allocate log data sets and HCM MCF data set

ACTLOG_VOL
: If the dataset names are not managed by SMS, this keyword specifies the up to 6 characters long volume serial number to allocate a new activity log. Using an asterisk (*) indicates that the activity log file will be placed on the same volume where the associated IODF resides.

CHLOG_VOL
: If the dataset names are not managed by SMS, this keyword specifies the up to 6 characters long volume serial number where to allocate the change log data set. Using an asterisk (*) indicates that the change log file will be placed on the same volume where the associated IODF resides.

MCF_VOL

If the data set names are not managed by SMS, this keyword specifies the up to 6 characters long volume serial number where to allocate the MCF data set. Using an asterisk (*) indicates that the MCF data set will be placed on the same volume where the associated IODF resides.

Automatic activity logging

CHANGE_LOG

YES/NO. Specifies whether you want to activate change logging (YES). The default is NO.

If enabled, and HCD additionally maintains an activity log file for the IODF, then HCD logs all updates applied to the IODF in a change log file, and automatically generates activity log entries for updates on HCD objects, for example, add, delete, update or connect, disconnect. These entries are proposals and are shown in the activity log panel where you can modify them before you exit the IODF (see also "Activity logging and change logging" on page 45).

A change of the value setting for this keyword will not be active until the next start of HCD.

Allow or prohibit mixed esoterics

MIXED_ESOTERIC

YES/NO. Specifies whether you want to allow or prohibit mixed devices (DASD and TAPE) under the same esoteric name. If you specify NO, which is the default, and your configuration contains an esoteric with mixed DASD and TAPE devices, the request to build a production IODF will fail with error message CBDA332I. If you specify YES, HCD issues message CBDA332I as warning message and continues the request.

HLQ for exporting IODFs

EXPORTED_HLQ

By default, when exporting an IODF, the generated sequential data set is written with the high-level qualifier (HLQ) of the userID that issued the Export IODF function. If this convention is not suitable for your installation, you can use the keyword EXPORTED_HLQ to specify a different HLQ (up to 8 characters).

Allocation space for data sets allocated due to HCM requests

ALLOC_SPACE

This HCD profile option lets you overwrite the default allocation (CYL,50,50) for data sets that are temporarily allocated in response to HCM requests, such as HCDASMP, HCDRPT, HCDIN. For example, specify: `ALLOC_SPACE = HCDASMP,` nn where nn is the size (decimal number) used for primary and secondary allocation (in CYL).

Extending allocation space

MCF_EXTENSION

This HCD profile option lets you define additional space when allocating the MCF data sets to allow for updates.

With this keyword, you specify the percentage of additional space that is to be allocated when defining an MCF data set. Per default an MCF data set is allocated with 30 percent additional space than actually needed to hold the MCF data. You can use this space for updates that consume data space without the need to allocate a new MCF and delete the old one. For example, MCF_EXTENSION = 50 allocates 50% additional space.

CHLOG_EXTENSION

This HCD profile option lets you define additional space when allocating the change log data set.

With this keyword, you specify the percentage of additional space that is to be allocated when defining a change log data set. By default, a change log data set is allocated with the same size as the associated IODF. For example, a value set to 50 allocates 50% additional space.

The default extension is 0.

Name and volume serial number for UIM library

UIM_LIBNAME

Specifies the name of the data set containing the UIMs, the associated UDTs, and any help members for the UIMs. If the keyword is omitted, SYS1.NUCLEUS is assumed (Note: only UIMs residing in SYS1.NUCLEUS are read during IPL!).

When UIM_LIBNAME is specified, HCD does not implicitly access SYS1.NUCLEUS for loading the UIMs.

If you specify an asterisk (*) as data set name, HCD assumes that the UIM data set (including SYS1.NUCLEUS) is part of the ISPF load library concatenation chain, contained in the JOBLIB/STEPLIB concatenation chain, or specified in the active LNKLSTxx member.

You can only define one data set with the UIM_LIBNAME statement. If you want to specify several data sets, specify an asterisk (*) as data set name and specify the data sets in the JOBLIB/STEPLIB concatenation chain.

UIM_VOLSER

Specifies the volume serial number of the UIM library. Required only if the data set is specified via keyword UIM_LIBNAME and is uncataloged.

Load VM UIMs

VM_UIM

YES/NO. Specifies whether VM UIMs will be loaded. The default is YES. Installations without VM should specify NO to gain some performance improvement during HCD initialization.

Options for text reports

LINES_PER_REPORT_PAGE

Specifies the maximum number of lines per page for reports. The default value is 55.

UPPERCASE_ONLY

YES/NO. Specifies whether all HCD reports will be written in uppercase or not. This is useful when using printers that do not have the English codepage. The default is NO.

Layout of graphical reports

GCR_SCALE

Specifies the scaling factor for graphical reports when using BookMaster®. The default is *GCR_SCALE=.6*.

GCR_COMPACT

YES/NO. Allows more objects to be displayed in a graphical report. The default is NO. Depending on the report type, a different maximum number of objects is shown on one page:

Report Type	COMPACT=NO	COMPACT=YES
CU	12 channels, 8 control units	16 channels, 10 control units
LCU	8 channels, 8 control units	8 channels, 8 control units
CHPID	8 channels, 64 control units	16 channels, 64 control units
Switch	1 switch	1 switch
CF	1 coupling facility	1 coupling facility

GCR_FORMAT

Specifies the formatting type:

BOOKIE
For BookMaster. This is the default.

DCF
creates a data set for DCF containing script commands.

GML
creates a data set for DCF containing GML tags.

GDF
creates one or more members in GDF format for printing with GDDM (not for batch).

GCR_FONT
Specifies the font to be used for printing; applicable only if GCR_FORMAT=DCF or GCR_FORMAT=GML was specified. Specify the appropriate font supported by your installation. For information on how to create a graphical report, see "Create or view graphical configuration reports" on page 220.

Color settings for graphical display function

(The following colors are valid specifications: green, red, blue, black, purple, pink, yellow, brown, and white.)

COLOR_NORM
Specifies the color used when drawing the picture. Make sure that the color is visible on defaulted or specified background. The default is GREEN.

COLOR_TEXT
Specifies the color used for any text in the picture. The default is GREEN.

COLOR_HIGH
Specifies the color to be used when identifying a focused object. The default is RED.

COLOR_BACKGROUND
Specifies the background color. If nothing is specified, the graphical display function uses the standard background of the terminal.

Support of TSO option NOPREFIX

TSO_NOPREFIX
YES/NO. Specifies whether the TSO profile option NOPREFIX is recognized by HCD. The default is NO. If you specify TSO_NOPREFIX=YES, and the TSO option NOPREFIX is active, all data set names specified in the HCD dialog are taken as is, i.e. HCD does not add a high-level qualifier. Data set names that are generated by HCD act independent of the TSO option NOPREFIX, and the user ID is added as the high-level qualifier.

Esoteric token when migrating MVSCP input data sets

ESOTERIC_TOKEN
YES/NO. YES specifies that HCD will assign esoteric tokens in ascending order when migrating an MVSCP input data set. NO (which is the default) specifies that no tokens will be assigned.

Control unit type when migrating IOCP input data sets

MAP_CUTYPE
Specifies how a control unit type in an IOCP input data set is mapped to a control unit type in the IODF. Specify one or more of the following mappings:

```
MAP_CUTYPE = xxxxx,yyyy-yy
```

xxxxx
is the control unit type specified in an IOCP input data set

yyyy-yy
is the control unit type and model to be used in the IODF.

For example parameters, see the sample profile in Figure 12 on page 26.

Extended migration

MIGRATE_EXTENDED

YES/NO. Specify YES to exploit the extended migration possibilities as described in "Changing I/O configurations by editing data sets" on page 249.

If you specify NO (which is the default), the additional keywords are not generated during IOCP build and when re-migrating IOCP input data sets, the migration function ignores the commented *$HCDC$ and *HCD tags.

Bypass IODF information update for SNA processor

BYPASS_UPD_IODF_FOR_SNA

YES/NO. This provides a possibility of bypassing the attempt to update the IODF information for SNA processors after having successfully built the IOCDS.

If you specify YES, then no attempts will be made to update the IODF with IOCDS status information, which will usually fail as a result of the IODF being in an exclusive access mode with the dialog.

If you specify NO (which is the default), then for SNA and non-SNA processors, an attempt is made to update IOCDS information in the IODF after the IOCDS has been built successfully.

Display information during ACTIVATE

SHOW_IO_CHANGES

YES/NO. This option applies to dynamic activate. When performing both a hardware and software change, specify YES (which is the default) to get information about the channel paths, control units, and devices that are deleted, modified, or added.

Loading an IODF into a data space

IODF_DATA_SPACE

YES/NO. If you specify YES (which is the default), the IODF is loaded into a data space.

If you specify NO, the IODF is loaded into the user address space.

IODF name verification for batch jobs

BATCH_IODF_NAME_CHECK

YES/NO. If you specify YES (which is the default), HCD checks if the IODF specified for a batch job conforms to the naming convention as described in "IODF naming convention" on page 29. Processing of IODFs with invalid names is limited to deletion.

If you specify NO, HCD does not check the IODF names specified for batch jobs.

IODF checker automation

CHECK_IODF

YES/NO. If you specify YES, HCD checks an IODF for consistency and structural correctness whenever the IODF accessed in update mode is unallocated. This corresponds to the TRACE ID=IODF command and will consume processing time depending on the size of the IODF.

If you specify NO (which is the default), HCD does not check the IODF automatically..

Delay device regrouping

DELAYED_GROUPING

YES/NO. If you specify YES, HCD performs any necessary device regrouping after a device group split only when the IODF is closed. This gives a better response time in the HCD dialog for large IODFs.

If you specify NO (which is the default), HCD performs a necessary device regrouping each time when users exit the ***I/O Device List***, or, in case the ***I/O Device List*** was called from either the ***Operating System Configuration List*** or the ***Channel Subsystem List***, when leaving these lists.

Group devices for activate request

DEVGRP_ACTIVATE

YES/NO. If you specify YES (which is the default), HCD groups device related change requests during dynamic activation. The intent is to reduce memory requirements during dynamic activates. This option is only evaluated starting with HCD 2.2. The default is YES and should only be changed if instructed by IBM service.

Default settings for OS parameters

OS_PARM_DEFAULT

This keyword overrides a parameter default value set by the UIM. The value is used as a default on the HCD Define Device Parameters/Features panel. The syntax is:

```
OS_PARM_DEFAULT = xxxxxx,yyyyyy

where:

xxxxxx is the parameter keyword
yyyyyy is the new parameter default value
```

Example: The LOCANY default value is NO. You can change it to YES by specifying the HCD profile option:

```
OS_PARM_DEFAULT = LOCANY,YES
```

Note: Default values cannot be set differently for different device types. Features, for example SHARED, cannot be defaulted using this keyword.

Extension of the attachable device list of a control unit

CU_ATTACHABLE_DEVICE

This keyword allows the attachable device list of a control unit to be extended to include additional device types. Both the control unit type and the device type must be defined via UIMs. The value syntax is:

```
xxxxxx,yyyyyy

where:

xxxxxx is the control unit type
yyyyyy is the additional device type
```

Note that more than one device type can be added to the same control unit type.

```
Example:
  CU_ATTACHABLE_DEVICE = RS6K,3174
  CU_ATTACHABLE_DEVICE = RS6K,3274
```

A change of the value settings for this keyword will not be active until the next start of HCD.

Show partition defaults in IOCP statements

SHOW_IOCP_DEFAULTS

YES/NO. Use this option to write comment lines into the generated IOCP deck which show the partition assignments in effect for those CHPID and IODEVICE statements which make use of the IOCP defaults for the PARTITION and NOTPART values.

Setting this option to YES causes the suppressed PARTITION / NOTPART keywords to be generated as comments prefaced by the tag *$DFLT$*.

The default is NO.

Export/import additional configuration objects

SHOW_CONFIG_ALL

YES/NO. Use this option to write additional configuration objects during export of switch configuration statements.

Setting this option to YES affects the ***Build I/O configuration data*** dialog and batch utility to write configuration statements for unconnected control units and devices in addition to those for switches, if the *Configuration/Switch ID* is specified as *.

The default is NO.

Unconditional generation of D/R site OS configurations

UNCOND_GENERATE_DROS

YES/NO. If you change a ***generated*** D/R site OS configuration before building a new production IODF, it loses the ***generated*** attribute and therefore is not regenerated when the production IODF is built (see also "D/R site OS configurations" on page 70). Instead, you must manually delete the D/R site OS configuration and rebuild the production IODF to get the configuration regenerated automatically.

Setting the UNCOND_GENERATE_DROS option to YES affects that HCD regenerates D/R site OS configurations whenever a new production IODF is built, independent from whether the configurations have been previously modified or not. This helps to avoid manual user interventions in cases where changes on the primary configuration are not automatically applied to the D/R site OS configuration.

The default is NO.

HMC-wide activation

CONNECTION_TABLE

Use this profile option to specify the name of a data set that contains the connection table for establishing connectivity to HCD on the remote systems via TCP/IP.

RCALL_LOG

YES/NO. Use this profile option to activate logging of remote calls into a data set.

Setting this option to YES allocates a new data set named HLQ.CBDQCLNT.LOG, if it does not yet exist. Otherwise an existing data set is used. The default is NO.

RCALL_TIMEOUT

Use this profile option to set the timeout value for the initial connection to a remote system.

Specify the timeout value in seconds using a decimal number. Specifing zero causes HCD to use the default. The default is 60.

Hardware-only activation

HWACT_TIMEOUT

During dynamic hardware-only activation a timeout mechanism is used to monitor the transfer of the I/O configuration to the target processor. The timeout value is calculated based on the size of the configuration to be transferred. Depending on network performance, this mechanism may terminate the operation too early. In this case, message CBDG690 (with rc=24) is shown when in fact the configuration was successfully transferred and the activation is still in progress.

You can use this profile option to override the default timeout calculation. Specify HWACT_TIMEOUT=n to allow up to n seconds for a data transfer to complete. The (decimal) number n may be in the range 1..32767 (up to about 9 hours).

Example

The following figure shows a profile with sample data:

```
/* ****************************************************************** */
/*                                                                    */
/* HCD Profile                                                        */
/* Created :  2012-11-27  16:09:15  by user : DOCU                    */
/*                                                                    */
/* ****************************************************************** */
/* ****************************************************************** */
/*                                                                    */
/*    HCD Profile Section for Standard Profile Options                */
/*                                                                    */
/* ****************************************************************** */
ACTLOG_VOL = *                    /* ACTlog on same volume as IODF    */
ALLOC_SPACE = HCDASMP,60
BATCH_IODF_NAME_CHECK = NO        /* changed to non-default NO        */
BYPASS_UPD_IODF_FOR_SNA = YES     /* No IODF update with IOCDS data   */
CHANGE_LOG = YES                  /* CHANGE LOG REQ. ACTIVITY LOG = O */
CHLOG_VOL = *
COLOR_NORM = BLACK                /* default was GREEN                */
COLOR_TEXT = BLUE                 /* default was GREEN                */
CONNECTION_TABLE = DOCU.HCD.CONN(TABLE) /* HMC wide activate          */
CU_ATTACHABLE_DEVICE = RS6K,3274  /* extend attachable device list    */
ESOTERIC_TOKEN = YES              /* Esoteric token: ascending order  */
GCR_FONT = X0GT20
HCDDECK_VOL = D83WL2              /* Vol for configuration data set   */
HCDJES3_VOL = D83WL4              /* Vol for JES3 output data set     */
LINES_PER_REPORT_PAGE = 60        /* Max. number of lines per page    */
MAP_CUTYPE = 3705,3745            /* Replace CU type during migration */
MAP_CUTYPE = 3880,3880-23         /* Replace CU type during migration */
MIGRATE_EXTENDED = YES            /* Enable migration enhancements    */
MIXED_ESOTERIC = YES              /* Allow mixed dev. w same esoteric */
OS_PARM_DEFAULT = LOCANY,YES      /* Default for parameter LOCANY     */
RCALL_TIMEOUT = 10                /* Default is 60                    */
SHOW_CONFIG_ALL = YES             /* write additional config objects  */
SHOW_IOCP_DEFAULTS = YES          /* show IOCP default for partitions */
TSO_NOPREFIX = YES                /* Enable TSO Noprefix (Default NO) */
UNCOND_GENERATE_DROS = YES        /* regenerate D/R site OS config    */
HWACT_TIMEOUT = 7200              /* allow two hours                  */
******************************** Bottom of Data ************************
```

Figure 12. Example of an HCD Profile

Customizing HCD EXEC procedures

Some of the HCD tasks, invoked from the dialog, generate batch jobs. These batch jobs use EXEC procedures, as shown in Table 2 on page 26.

Your installation can use normal ISPF or TSO/E facilities to change the job control statements in these EXEC procedures. They are stored in the library SYS1.PROCLIB. You can customize these procedures according to your own needs.

You can also modify the EXEC procedures by using JCL overwrite statements in the HCD dialog. Thus, you can, for example, add a statement that refers to the HCD profile. See “Job statement information used in panels” on page 64 on how to specify JCL statements in the HCD dialog.

Table 2. Batch Jobs Used by the HCD Dialog

HCD Task	EXEC Procedure	Job Step Name	More Details
Build an IOCDS	CBDJIOCP	GO	see “Build an IOCDS or an IOCP input data set” on page 297
Build an IOCP input data set	CBDJIOCP	GO	see “Build an IOCDS or an IOCP input data set” on page 297
Print a configuration report	CBDJRPTS	GO	see “Print configuration reports” on page 304
Compare IODFs and CSS/OS views	CBDJCMPR	GO	see “Compare IODFs or CSS/OS Reports” on page 310

Table 2. Batch Jobs Used by the HCD Dialog (continued)			
HCD Task	**EXEC Procedure**	**Job Step Name**	**More Details**
Import an IODF	CBDJIMPT	IMP	see "Import an IODF" on page 314
Transmit part of an IODF	CBDJXMIT	GO	see "Transmit a configuration package" on page 44

Chapter 4. How to work with I/O definition files (IODF)

Overview

This information unit includes:

- IODF naming convention
- Working with I/O definition files (specify, change, create, view, backup, delete, copy, export, import, and upgrade IODFs)
- Working with large IODFs
- Activity Logging
- Using an IODF among different release levels

When you start an HCD session, you need to specify the IODF that HCD is to use. How to do this, how to change to another IODF, and how to use HCD tasks to maintain your IODFs is described subsequently.

Before you can activate your configuration, you must build a production IODF. This task is described in "Build a production IODF" on page 176.

Note: The IODF data sets must be cataloged so that you can use them with HCD.

IODF naming convention

You need to comply to naming conventions for work IODFs, production IODFs, and further data sets associated to an IODF (activity log, change log and HCM MCF data set).

The IODF is a VSAM LINEAR data set with different names for the cluster component and the data component. The name of the data set with a cluster component has the format:

```
'hhhhhhhh.IODFcc{.yyyyyyyy. … .yyyyyyyy}.CLUSTER'
```

The name of the data set with a data component has the format:

```
'hhhhhhhh.IODFcc{.yyyyyyyy. … .yyyyyyyy}'
```

Work IODF

The data set name for a work IODF has the format of:

```
'hhhhhhhh.IODFcc{.yyyyyyyy. … .yyyyyyyy}'
```

hhhhhhhh
is the high-level qualifier; up to 8 characters long.

cc
is any two hexadecimal characters (that is, 0-9 and A-F).

yyyyyyyy
are optional qualifiers, separated by a . and up to 8 characters long. The following qualifiers must not be used as last qualifier: CLUSTER, ACTLOG, CHLOG or MCF.

You can use any number of optional qualifiers but do not make the total name longer than 35 characters because, in some circumstances, HCD appends an additional qualifier.

If you use a change log or an HCM master configuration file, the total IODF name must not exceed 29 characters.

© Copyright IBM Corp. 1994, 2022

If you omit the high-level qualifier and the enclosing single quotation marks, HCD automatically adds your user prefix (your user ID is the default).

Production IODF

The data set name for a production IODF has the same format as a work IODF. You may specify additional qualifiers to differentiate among IODFs (for example for backup reasons). However, the optional qualifiers must be omitted if the IODF is to be used for IPL or dynamic activation. Thus, the format would be:

```
'hhhhhhhh.IODFcc'
```

hhhhhhhh
is the high-level qualifier; up to 8 characters long.

cc
is any two hexadecimal characters (that is, 0-9 and A-F).

Associated data sets

Files associated to an IODF, if used, also must conform to the IODF naming conventions, plus a required last qualifier:

Activity log (a sequential fixed 80 character data set):

```
'hhhhhhhh.IODFcc{.yyyyyyyy. … .yyyyyyyy}.ACTLOG'
```

Change log (a VSAM LINEAR data set with cluster component and data component):

```
'hhhhhhhh.IODFcc{.yyyyyyyy. … .yyyyyyyy}.CHLOG'
```

HCM master configuration file (MCF, a VSAM LINEAR data set with cluster and data components):

```
'hhhhhhhh.IODFcc{.yyyyyyyy. … .yyyyyyyy}.MCF'
```

Create or specify an IODF

You specify the name of the IODF that you want to use on the ***Primary Task Selection*** panel. The first time you use the dialog, HCD puts the default name `SYS1.IODF00.WORK` in the IODF name field (see Figure 29 on page 51). You can type over this name to specify the name you want to use.

If you specify an IODF name that does not exist, HCD assumes that you intend to create a new IODF and displays a panel to let you specify the required attributes. HCD then creates and automatically catalogs the IODF.

```
                    Create Work I/O Definition File


 The specified I/O definition file does not exist. To create a new
 file, specify the following values.

 IODF name  . . . . . . 'DOCU.IODF01.ZOS110.HCDUG.WORK'

 Volume serial number . ______  +

 Space allocation . . . 1024    (Number of 4K blocks)

 Activity logging . . . Yes     (Yes or No)

 Multi-user access  . . No      (Yes or No)

 Description  . . . . . ____________________________________________
                        ____________________________________________
                        ____________________________________________

  F1=Help    F2=Split   F3=Exit    F4=Prompt  F9=Swap   F12=Cancel
```

Figure 13. Create Work I/O Definition File

- Volume serial number (of the data volume the IODF will reside on)

  This entry is ignored if your system is managed by SMS, otherwise it is mandatory.
- Space allocation

  The online HELP gives advice on how much space to allocate. If you run out of space while working with an IODF, you can use the ***Copy IODF*** task to copy the IODF to a larger data set.
- Activity logging

  You have to decide now whether you want HCD to maintain an activity log for the IODF; you cannot specify it later. If you want to use an activity log, your system must have Program Development Facility (PDF) installed.
- Multi-user access

  Specify whether or not you want to enable the IODF for multi-user access.
- Description

  Here you may enter any useful additional information concerning the IODF, for example, the system it applies to, a special purpose of the IODF, or the author.

The IODF remains in effect throughout all tasks of your current session and later HCD sessions, until you change it.

Multi-user access

Up to z/OS V1R9 HCD, multiple users could read an IODF simultaneously, but no user could read an IODF while it was accessed in update mode by another user. Also, a user could only update an IODF, if no other user accessed the IODF, neither in read nor update mode.

Starting with release z/OS V1R10 HCD, when creating an IODF, you can specify a multi-user access option in the ***Create Work I/O Definition File*** dialog (Figure 13 on page 31). The default is single-user access.

Having exclusive access to an IODF, users can also switch between single-user mode and multi-user access using an option in the ***Change I/O Definition File Attributes*** dialog.

Note:

1. To enable an IODF for multi-user access you need ALTER access authority.
2. You can check whether the multi-user access property is enabled for an IODF using ***View I/O definition file information*** from the ***Maintain I/O Definition Files*** task.

With the multi-user access option specified, an IODF is kept in exclusive update mode for a user only for the duration of a single transaction. If the updates of this transaction are committed, another user may update the IODF without requiring the first user to release it.

If a user is updating a multi-user access enabled IODF, HCD implements the following processing: HCD locks the IODF. If multiple subsequent users now also want to apply concurrent updates to the same IODF, they must wait in a queue. However, since the first user's single transaction may last a split-second only, HCD repeats all other users' subsequent update requests a couple of times. If all attempts fail, for example, because the first user updates the IODF using the dialog and is delaying required input, HCD will notify all other requesting users with a message, telling who is currently updating the IODF.

Associated change log files inherit the multi-user access ability from the IODFs.

Note:

When several users simultaneously work on the same IODF, exploiting the multi-user access capability, it is recommended that they co-ordinate their activities in order to ensure the consistency and integrity of the changes made to the IODF.

How to release a lock after an abnormal termination: In most cases of abnormal termination while working with IODFs in multi-user access, HCD invokes a recovery routine that deletes a pending lock. If, however, HCD cannot enter this routine, the lock remains active, and any user, when trying to access the IODF next time, receives a message about who is holding the lock.

In such a case, a user with ALTER access right must re-access the IODF exclusively and select action ***Change I/O definition file attributes*** to set back the multi-user access capability to NO. This action deletes the lock, and multi-user access can now be reactivated for that IODF.

Sharing IODFs

If you want to share an IODF across two or more systems, you must:

1. Catalog the IODF in the user catalog that is shared by those systems.
2. Define an ALIAS to that catalog in the master catalog of each system that uses the IODF (for details, refer to “Catalog considerations” on page 326).

Note: Control of sharing the IODF resource between multiple systems is achieved via Global Resource Serialization (GRS).

Important:

If you update an IODF simultaneously from different systems that are *not* in the same GRS complex, you may destroy data in the IODF.

Deciding on the number of IODFs

The decision whether to create one IODF for each processor, or to combine the I/O definitions for two or more processors in a single IODF, depends on your environment. This section explains when it is advantageous or even necessary to keep the I/O definitions of two or more processors in the same IODF.

Shared control units and devices
If control units and devices are shared by different processors, the I/O definitions for these processors should be kept in the same IODF to keep change effort to a minimum and to avoid conflicting definitions.

Processor and related OS configuration(s)
For a full dynamic reconfiguration, the IPLed OS configuration must be in the same production IODF as the processor configuration selected for POR.

Coupling facility support
For coupling facility support, you have to maintain your coupling facility definitions for the processors to be connected in the same IODF.

Switch connections
It is recommended that you maintain your switch configurations in the same IODF as the hardware and software configuration definitions to provide complete validation of the data path.

In order to lookup the port connections of a switch, all connected objects to the ports of a switch have to be defined in the same IODF.

CPCs of a processor cluster
To manage IODFs, IOCDSs, and IPL parameters within the CPCs of a processor cluster from a focal-point HCD, the corresponding processor configurations have to be kept in the same IODF.

Dynamic sysplex reconfiguration
To dynamically reconfigure the I/O configuration of a system within a sysplex from a focal-point HCD, the processor and OS configuration of the sysplex system have to be defined in the same IODF.

CTC connection report
All CTC connections listed in a CTC connection report must be defined in the same IODF. Misconfigurations can be detected only within the scope of one IODF.

Reporting
The scope of the reports (textual or graphical) is a single IODF. All I/O definitions required for a report must be kept in the same IODF.

Validation
The scope of the validation function is a single IODF.

HCM
The scope of the configuration shown by HCM is a single IODF.

These requirements and recommendations may lead to a large IODF, depending on the size of the installation. The number of elements in the single IODF may be too large for effective management. HCD provides the possibility of creating manageable *subset IODFs* with a scope limited to a part of the I/O configuration from a *master IODF* describing the entire configuration. For details on this IODF management strategy refer to "The master IODF concept" on page 33.

The master IODF concept

In order to take full advantage of the available HCD functions and to keep a maximum of freedom for reconfigurations it is proposed to keep a master IODF. A master IODF may contain the I/O definitions for an entire enterprise structure. However, a user may decide to divide the I/O configuration definitions of the whole enterprise into several master IODFs, where little or no interference is expected.

Major configuration changes are done in the master IODF. These include:

- processor configurations,
- OS configurations,
- switch configurations, and
- definitions spanning multiple configurations, e. g. coupling facility connections.

After such changes have been made, a production IODF is built. From this IODF comprehensive reports can be obtained.

HCD provides a set of functions which allows the management of very large IODFs for their activation on individual systems, like POR, IPL, dynamic I/O changes, or for processor cluster management tasks. Using these functions, subset IODFs containing I/O definitions relevant to only one particular system may be built from the master IODF .

There are no strict rules about what a subset IODF must consist of. Typically it contains:

- a processor configuration with its related OS configuration, or
- all I/O configurations describing the CPCs in a processor cluster, or
- all I/O configurations describing the systems of a sysplex.

The content of a subset IODF is specified in a configuration package (see "Work with configuration packages" on page 41).

The subset IODF is transferred to the corresponding target system where it is imported and used as the IODF for that system. A subset IODF constitutes a fully functional IODF. When it is built from a master IODF, the processor tokens are preserved. If necessary, updates concerning the target system alone may be carried out using the subset IODF. Subsequently, the subset IODF can be sent back to the system administering the master IODF and merged back into the master IODF, thereby updating it with the changes made at the target system.

Figure 14 on page 34 illustrates the possible flow of I/O information according to the master IODF concept.

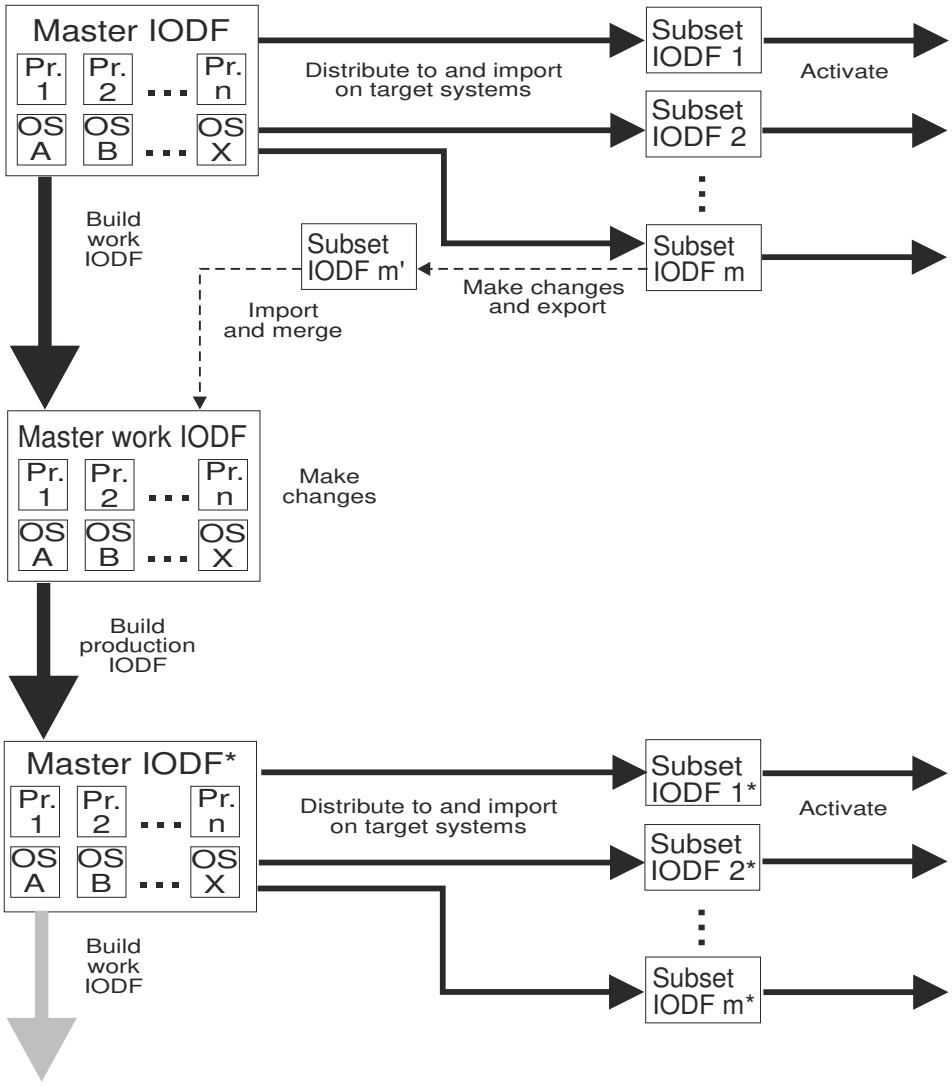

Figure 14. IODF Distribution/Merge Process

How HCD arranges devices into groups in an IODF

To reduce the size of IODFs and to improve the processing performance of large configurations, HCD is arranging single devices into a device group, if they have the following characteristics in common:

- The device numbers of all devices are in consecutive sequence.
- All devices of the group have the same device type (unit, model) and attribute values (Serial-#, Description, VOLSER).
- All devices of the group are attached to the same control unit(s).

- All devices of the group are connected to the same processors/channel subsystems and have the same corresponding processor-specific attributes.
- All devices of the group are connected to the same operating systems and have the same corresponding OS-specific attributes (device type, parameters, features, console definition, subchannel set number).
- For each OS and each eligible device table (EDT) in the OS, all devices of the group are connected to the same esoterics.

Devices that adhere to the these rules are aggregated into device groups containing the maximum number of applicable devices. If you apply a change on one or more devices from a group, HCD checks how to rearrange the devices and device groups contained in the IODF in order to achieve the best possible organisation of devices into groups again according to the specified rules. Another example may be that you change the attributes of a group in a way that two previously similar groups now must be merged into one group. However, the required rearrangements are not necessarily performed by HCD at once, but may be delayed to an appropriate point in time.

Change to another IODF

You can work with only one IODF at a time. If, during an HCD session, you want to change to another IODF, you must return to the ***Primary Task Selection*** panel and specify the new IODF. If the old IODF has an activity log and has been modified, a panel is displayed to let you add a comment into the activity log ("Activity logging and change logging" on page 45 tells you how). The new IODF now becomes the current IODF.

Change a production IODF / Create a work IODF based on a production IODF

HCD allows you to perform all tasks on the data stored in a production IODF as long as you do not try to change it. If you try though, HCD displays the ***Create Work I/O Definition File*** panel where you can define a new work IODF based on the current production IODF.

HCD then copies the production IODF to that new work IODF, makes the work IODF the currently accessed IODF, and applies to it all further changes.

You must specify a new data set for the work IODF; you cannot use an existing one. HCD creates a default work IODF name by appending the qualifier WORK to the production IODF name. You can change this default work IODF name.

When you have completed the changes, you can use HCD to build a new production IODF from the work IODF.

View active IODF

HCD provides information about the IODF that has been used for last POR/IPL or for dynamic activation (that is, the currently active IODF); in addition the operating system ID and EDT ID used for IPL are shown, and the configuration token that is currently active in the HSA (hardware system area). For a description of this function, see "View active configuration" on page 195.

Backup work or production IODFs

You can use the ***Backup*** action bar choice on any action list panel to copy a work or production IODF to a backup data set. Thus you can keep track of different stages of the configuration as well as retrieve data lost by accident. When you do the first backup, you must also specify the volume serial number, if applicable, and the space allocation for the backup data set. HCD uses the normal catalog process to catalog copies of the IODFs.

If you backup a work IODF, you need to specify the name of the backup data set only once for each IODF (when you do the first backup). HCD saves the name of the backup IODF data set, so you can reuse this data set for each subsequent backup (or use a different one if you want).

If you backup a production IODF, HCD does not save the name of the backup data set, because a production IODF cannot be edited. It is suggested that you maintain a backup copy of your production IODF on a separate volume that is accessible from all systems that will be sharing the backup. When the primary IODF volume is inaccessible or the IODF itself is corrupted, the system can be IPLed through a backup IODF on the alternate volume.

It is also recommended that you choose an alternate high level qualifier for your backup IODF since a lost IODF volume may imply a lost IODF catalog. This high level qualifier can be cataloged in either the master catalog or in an alternate user catalog.

As an alternative method to create a backup IODF, you can use the following procedure:

1. Select ***Maintain I/O definition files*** from the ***Primary Task Selection*** panel (Figure 9 on page 16).
2. Select ***Copy I/O definition file*** from the ***Maintain I/O definition Files*** panel (Figure 15 on page 36).
3. Specify the name of the backup IODF.

Maintain IODFs

HCD provides the tasks listed on the Maintain I/O Definition Files panel (Figure 15 on page 36) to help you maintain your IODFs. You can reach this panel from the ***Primary Task Selection*** panel (see Figure 29 on page 51).

```
                Maintain I/O Definition Files


 Select one of the following tasks.

 __  1.  Delete I/O definition file
     2.  Copy I/O definition file
     3.  Change I/O definition file attributes
     4.  View I/O definition file information
     5.  Export I/O definition file
     6.  Import I/O definition file
     7.  Work with Configuration Packages
     8.  Upgrade I/O definition file to new format

  F1=Help     F2=Split    F3=Exit     F9=Swap    F12=Cancel
```

Figure 15. Maintain I/O Definition Files

Delete an IODF

This task deletes an IODF. If the IODF has an activity log, that log is also deleted. Also, if an HCM master configuration file (MCF) is associated with the IODF, it is deleted along with the IODF. HCD asks you for confirmation before actually deleting the IODF. It will not be possible to delete the currently active IODF of the system, HCD is running on.

Copy an IODF

You can invoke the task ***Copy I/O definition file from the Maintain I/O Definition Files panel (*****Figure 15 on page 36*****).*** This task copies any IODF to another IODF (either existing or new). You must specify the name, volume serial number, if applicable, and the space allocation of the target data set. If the IODF has an activity log, that log may also be copied. Also, if an HCM master configuration file (MCF) is associated with the IODF, it is copied along with the IODF. However, a change log file (CHLOG), if available, is not copied.

During a definition task, you can use ***Copy IODF*** to copy the existing data to a larger data set if you have allocated insufficient space to a work IODF. In this case, you need to return to the ***Primary Task Selection*** panel afterwards to specify the new data set as the IODF you are working with from now on.

In the ***Copy I/O Definition File*** dialog, if you specify a target IODF that does not yet exist, HCD displays the dialog from Figure 16 on page 37 where you can create a new target IODF. The space allocation default is the number of allocated blocks of the source IODF.

```
                 Create New I/O Definition File


The specified target file does not exist.  To create a new
file, specify the following values.

Volume serial number . . ______  +

Space allocation . . . . 102     (Number of 4K blocks)
Activity logging . . . . No      (Yes or No)

 F1=Help     F2=Split    F3=Exit     F4=Prompt   F9=Swap
F12=Cancel
```

Figure 16. Create New I/O Definition File

If you copy an IODF which is enabled for multi-user access, this property is not inherited by a target IODF. However, an existing target IODF defined with the multi-user access property will always preserve this property, independent from the source IODF.

You can also invoke the ***Copy I/O definition file*** task in batch mode. For details refer to "Copy IODF" on page 303.

Change IODF attributes

With this task, you can change certain attributes of an IODF. You can change the description and you can enable or disable the IODF for multi-user access.

Note: To enable or disable an IODF for multi-user access you need ALTER access authority.

View an IODF

This task displays information about the currently accessed IODF. The information includes the type and version of the IODF, its description, the creation date, the last update, and how much of the allocated space for the IODF data set has been used.

You can also invoke the ***View IODF*** task from the ***View*** action bar, and by issuing the SHOWIODF command from the command line.

```
        View I/O Definition File Information


        IODF name  . . . . . . : 'IODFST.IODFD0'
        IODF type  . . . . . . : Production
        IODF version . . . . . : 5

        Creation date  . . . . : 2004-10-14
        Last update  . . . . . : 2004-10-21  14:48

        Volume serial number . : CMNSTC
        Allocated space  . . . : 2973   (Number of 4K blocks)
        Used space . . . . . . : 2965   (Number of 4K blocks)
           thereof utilized (%)  96

        Activity logging . . . : Yes
        Multi-user access  . . : No
        Backup IODF name . . . :

        Description  . . . . . : IODF for raised floor 710
                                 For system D0, D2, D4 and D6
                                 incl. sensed data and mig. SW data

        ENTER to continue.

        F1=Help    F2=Split   F3=Exit    F9=Swap   F12=Cancel
```

Figure 17. View IODF information

Export an IODF

This task sends an IODF, and optionally, its activity log file to another (local or remote) system. On the Export IODF panel, specify or revise the IODF name you want to export, the user ID, or the nickname (only for an attended target system), node ID, and status (attended or unattended) of the operating system (OS) to which the IODF is to be sent.

If the target system is unattended, the IODF is sent as a job to the target system, which must be a system of type MVS. In this case no explicit action on the target system is required. You can specify whether to replace an existing IODF with the same name. If the existing IODF is the active IODF for the remote system HCD is running on, replace will not be possible.

If the target system is attended (receiving to be done by the user on the remote system), the IODF is sent to the target system as a sequential data set. There it has to be received by using the TSO RECEIVE command. As a second step the IODF is imported on the target system (see also "Import an IODF" on page 40).

To export an IODF, HCD uses the TSO command TRANSMIT. Therefore, HCD creates a cataloged sequential data set named *tsoid*.EXPORTED.*iodfname*, where *tsoid* is the sending TSO user ID or the TSO prefix, or is determined by the profile option *EXPORTED_HLQ*, and *iodfname* is the part of the IODF data set name after the high-level qualifier.

Note: If you specify an asterisk ('*') for user and node, only the file will be created without sending it. Use this method if you need to transfer the file, for example to IBM service.

After processing the TRANSMIT command, the sequential data set is deleted.

If you have specified to send the selected IODF to a system with an operating system running in unattended mode, use the panel from Figure 18 on page 38 to define the job control language (JCL) statements for importing the IODF on that unattended system.

```
                        Define JCL for IODF Import


 Specify or revise the job control statements for importing the IODF on an
 MVS system.

 //JOBNAME  JOB (ACCT,BOX),'USER',CLASS=CLASS,
 //             MSGCLASS=MSGCLASS,MSGLEVEL=(1,1),
 /*LEAVE THIS JOB CARD UNCHANGED: USERID AND PASSWORD ARE GENERATED
 /*ROUTE    XEQ HCD3
 ------------------------------------------------------------------------
 ------------------------------------------------------------------------
 ------------------------------------------------------------------------
 ------------------------------------------------------------------------
 ------------------------------------------------------------------------

  F1=Help     F2=Split    F3=Exit     F5=Reset    F9=Swap    F12=Cancel
```

Figure 18. Define JCL for IODF Import

You can also invoke the ***Export IODF*** task by using the ***Export*** task in batch mode. For details refer to "Export an IODF" on page 315.

Prerequisites:

1. Network Job Entry (NJE) must be active.
2. The target user ID and password, and, if the target system is not SMS managed, the volume serial number of the receiving data volumes have to be known when the IODF is exported to an unattended system.

User authentication for unattended mode

If you export an IODF to a target system running in unattended mode, there are two alternatives for user authentication:

- sending the target user ID and password to the target node (that is, the user ID which receives the IODF)
- defining a surrogate user ID on the target to act on behalf of the receiver

Sending user ID and password:

To authenticate the receiving user with its user ID and password at the receiving system, enter the correct password on the panel from Figure 19 on page 39 twice. By default the password is translated to uppercase, but by setting the 'Translate password to uppercase' field to '2', the translation can be avoided.

```
                      Specify Target IODF and User Password


 Specify or revise the following values.

 Target IODF name  . . . . 'USER1.IODF89.TEST2.WORK1'
 Volume serial number  . . ______  (If IODF does not exist
                                   at the target node)

 Replace target IODF . . . 2  1. Yes    (If IODF already exists)
                              2. No

 User ID . . . . . . . . . : USER1        Node  . : TESTNODE
 Password  . . . . . . . . .
 Reentered password  . . .

 Translate password to uppercase . . 1  1. Yes
                                        2. No
```

Figure 19. Specify Target IODF and User Password

Defining a surrogate for the receiving user ID:

If you want to avoid sending passwords across the net, on the receiving system, you can define a surrogate user ID for the receiving user. The import job, submitted by the surrogate user, will run with the identity and authorization of the receiving user, without a password being sent.

To enable user authentication without sending a password, perform the following steps:

1. Define a surrogate user ID for the receiving user and the appropriate access rights for the sending and receiving users as shown in the example hereafter. This step is required as a setup only once.
2. When you export an IODF in unattended mode, on the ***Specify Target IODF and User Password*** panel (Figure 19 on page 39), enter a dummy character for the password and password confirmation (for example, an '*') to suppress sending of a password to the receiving target system.
3. On panel ***Define JCL for IODF Import*** panel (Figure 18 on page 38), replace the statement

   ```
   /*LEAVE THIS JOB CARD UNCHANGED: USERID AND PASSWORD ARE GENERATED
   ```

   with the target/receiving user ID to provide the following JCL:

   ```
   //JOBNAME  JOB (ACCT,BOX),'USER',CLASS=CLASS,
   //             MSGCLASS=MSGCLASS,MSGLEVEL=(1,1),
   //             USER=user_r
   /*ROUTE    XEQ HCD3
   ```

In the following example, `user_s` and `node_s` denote user ID and node ID of the sender and `user_r` and `node_r` denote the respective ids of the receiving system (running an operating system in unattended mode).

On the node_r issue:

```
RDEFINE NODES node_s.USER*.user_s UACC(UPDATE)
RDEFINE SURROGAT user_r.SUBMIT UACC(NONE) OWNER(user_r)
PERMIT user_r.SUBMIT CLASS(SURROGAT) ID(user_s) ACCESS(READ)
```

- The first statement controls whether jobs coming from `node_s` are allowed to enter the system from `node_s`. It also controls, whether jobs that enter the system from `node_s` nodes have to pass user identification and password verification checks.
- The second statement defines a `user_r.`SUBMIT profile in the SURROGAT general resource class for `user_r` who requires a surrogate user to act on his behalf.
- The third statement authorizes user_s to act as a surrogate for user_r.

Import an IODF

This task imports previously received IODF data into HCD. You can export and import IODFs between different HCD versions. You can, for example, export an IODF from HCD 1.4 and import it with HCD 1.7. Note that in this case you have to upgrade the earlier version IODF before using it with HCD, because the export/import function does not change the format of the IODF.

You can also invoke the ***Import IODF*** task by using the ***Import*** task in batch mode. For details refer to "Import an IODF" on page 314.

At an unattended target system, the IMPORT batch utility is invoked automatically when an IODF, with its associated job control, arrives at the system.

Upgrade an IODF

This task upgrades an IODF from a back-level format to the new format that is required for the current release of HCD.

Invoke the ***Upgrade I/O definition file to new format*** task as follows:

1. On the HCD ***Primary Task Selection*** panel (Figure 9 on page 16), specify the IODF to be upgraded at the bottom of the menu and then select option ***6. Maintain I/O definition files***.
2. From the Maintain I/O Definition Files panel (Figure 15 on page 36), invoke option ***8. Upgrade I/O definition file to new format***.

   HCD displays the following dialog:

```
                    Upgrade I/O Definition File


 Select a target for the IODF to be upgraded.

 IODF name . . . . . . . : 'DOCU.IODFA0.WORK'

 Target of upgrade . . . . 1   1.  To new work IODF
                               2.  In place

 Condense IODF . . . . . . 1   1.  Yes
                               2.  No

  F1=Help    F2=Split   F3=Exit    F4=Prompt  F9=Swap   F12=Cancel
```

   Figure 20. Upgrade an IODF

   - Upgrade into a new work IODF
   - Upgrade in place

Note:

1. The ***Upgrade in place*** option cannot be requested for a production IODF (as a production IODF cannot be altered). The final result of the upgrade IODF function is always a work IODF.

2. If you plan to add or change many devices in the configuration, ensure that you increase the space allocation when creating the IODF to allow for these changes.

If you select to upgrade in place, the accessed IODF is formatted to a V5 IODF. While the allocated and used space values do not change, the space utilization of the used blocks will decrease depending on the number of devices that can be grouped.

If you select to upgrade to a new IODF, the accessed IODF will not be changed. HCD displays the **Create Work I/O Definition File** dialog (see Figure 21 on page 41). The space allocation default is set as follows:

- If you select `Condense IODF = Yes`, the default allocation value is set to double the size required for a corresponding production IODF. This may result in much lower space requirements than without condensing.
- If you select `Condense IODF = No`, the default allocation value is set to the number of used blocks of the IODF to be upgraded.

```
                    Create Work I/O Definition File


 The current IODF was created by an earlier HCD release, and you
 have requested upgrade to a new data set. To create this data
 set, specify the following values.

 Source IODF  . . . . : 'DOCU.IODF00.TREXDOCU.HCMUG'
   Allocated space  . : 1024
   Used space . . . . : 27

 IODF name  . . . . . . ____________________________________

 Volume serial number . ______  +

 Space allocation . . . 64      (Number of 4K blocks)


  F1=Help    F2=Split   F3=Exit    F4=Prompt  F9=Swap   F12=Cancel
```

Figure 21. Create Work I/O Definition File

After the upgrade completed successfully, HCD issues a message of success and accesses the upgraded IODF with which you can start to work now.

You can also invoke the ***Upgrade I/O definition file to new format*** task in batch mode. For details refer to "Upgrade IODF" on page 292.

Note: An IODF can also be upgraded using the ***Copy IODF*** task (see "Copy an IODF" on page 36).

Work with configuration packages

Configuration packages define subset IODFs which are extracted from the accessed IODF (centrally administered master IODF) and distributed for activation at selected target systems, while keeping the processor token in sync.

When invoked with option ***Work with Configuration Packages*** from the panel shown in Figure 15 on page 36, this task displays the Configuration Package list. Configuration packages can be added and edited, transmitted from a production IODF, and they can be deleted.

```
  Goto  Backup  Query  Help
--------------------------------------------------------------------------------
                          Configuration Package List  Row 1 of 2 More:          >
Command ===> _____________________________________________ Scroll ===> PAGE

Select one or more packages, then press Enter. To add, use F11.

IODF name  . . . . : IODFST.IODF11.MASTER

  Package  ------Target----- ----Last sent---
/ Name     User     Node     Date       Time  Description
_ CB88     OS390H1  PKSTCB88 1997-10-22 06:28 For A/T system M88TSO
_ CB89     OS390H1  PKSTCB88 1997-10-21 04:34 For A/T system M89TSO
****************************** Bottom of data ******************************


 F1=Help      F2=Split     F3=Exit      F4=Prompt    F5=Reset     F7=Backward
 F8=Forward   F9=Swap     F10=Actions  F11=Add      F12=Cancel   F13=Instruct
F20=Right    F22=Command
```

Figure 22. Sample Configuration Package List — left panel

The target user and node as well as the description of a configuration package can be edited by overwriting the information on the panel. When scrolling to the right you can also overwrite the target IODF name and attended/unattended information.

Define a configuration package

To define a new configuration package perform the following steps:

1. On the Configuration Package List, use F11=Add. If you want to use an existing configuration package as a model, select the package and the ***Add like*** action from the context menu (or use action code a). The Add Configuration Package panel is displayed.

```
           Add Configuration Package


  Specify the following values.

  Package name . . . . . . CB8A____
  Package description  . . For A/T system M8ATSO

  User ID  . . . . . . . . OS390H1
  Node ID  . . . . . . . . PKSTCB88

  Operating system status  2  1. Attended
                              2. Unattended (MVS only)

  Target IODF name . . . . 'IODFST.IODF8A'
  Target volume  . . . . . CMNSTC  (for unattended, if not SMS)

   F1=Help     F2=Split    F3=Exit     F5=Reset    F9=Swap    F12=Cancel
```

Figure 23. Add Configuration Package

2. Enter a package name and other entry data as appropriate. The user ID and node specify the destination of the corresponding subset IODF. The name of the accessed IODF is used as default for the name of the IODF at the target system and for the `Descriptor field 1` and `Descriptor field 2` parameters during the Build Production IODF step, when the configuration package is transmitted (see step “5” on page 45 in section “Transmit a configuration package” on page 44). If no value is entered for the Operating system status, `Attended` is assumed which means that a user has to import the subset IODF into HCD at the target system. This is done automatically if 2 (`Unattended`) is specified.
3. After you press ENTER, HCD displays the updated Configuration Package list.

Edit a configuration package

The target user and node, the attended/unattended information, the target IODF name, and the description of a configuration package can be edited on the Configuration Package List (see Figure 22 on page 42).

To edit a configuration package perform the following steps:

1. Display the Configuration Package List.
2. Make changes to the configuration package by overwriting the entries on the list panel.

   To change the IODF name and attended/unattended information scroll to the right and overwrite.
3. Press ENTER.

Delete a configuration package

To delete a configuration package perform the following steps:

1. On the Configuration Package List select the package and the ***Delete*** action from the context menu (or use action code **d**). The Confirm Delete Configuration Package panel is displayed.
2. Press the Enter key to confirm the deletion. HCD displays the updated Configuration Package list.

Work with configuration package objects

Configuration package objects are operating systems or processors. The objects in a configuration package determine the scope of the corresponding subset IODF. To change the content of a configuration package select the package from the Configuration Package List (see "Work with configuration packages" on page 41) and the ***Work with Configuration Package Objects*** action from the context menu (or use action code **s**). The Configuration Package Objects List is displayed.

Add a configuration package object

To add a configuration package object to a configuration package perform the following steps:

1. Use F11=Add or select an object from the Configuration Package Object List and the ***Add like*** action from the context menu (or use action code **a**). The Add Configuration Package Object panel is displayed.
2. Select the `Configuration type`, processor (PR) or OS configuration (OS), and specify the `Configuration ID` of the object.
3. Press the Enter key. The updated Configuration Package Object List is displayed.

Merging changes into a master work IODF

If a system has been supplied with a subset IODF and configuration changes have been made using the subset IODF, you may want to update the master IODF with these changes. This can be done by merging the changed configuration package objects from the subset IODF back into the master work IODF.

First the updated subset IODF is exported on the corresponding system and imported at the system administering the master IODF. You can update the master work IODF by merging or by replacing configuration package objects.

The ***Merge*** action updates new/changed data in the master work IODF.

The ***Replace*** action first deletes the object configuration present in the master work IODF and then replaces it with the new one.

To merge a configuration package object into a master IODF perform the following steps:

1. Access the master work IODF the configuration package belongs to.
2. Display the Configuration Package Object List and select one or more objects. Select ***Merge*** (action code **m**) or ***Replace*** (action code **r**) from the context menu.
3. Specify the source IODF the configuration package refers to and press the Enter key.

4. The master work IODF is updated and a new master production IODF can be built.

Note:

1. Switch configurations are not repeated by ***Merge*** and ***Replace***. If necessary, switch configuration changes should be made in the master IODF before ***Merge*** or ***Replace*** are performed.
2. The ***Merge*** and ***Replace*** actions utilize the ***Repeat*** action for entering the new configuration data into the master work IODF. Refer to "Repeating (copying) processors" on page 80 and "Repeating (copying) operating system configurations" on page 71 for details on the ***Repeat*** action.

Delete configuration package objects

To delete a configuration package object from a configuration package perform the following steps:

1. Select an object from the Configuration Package Object List and the ***Delete*** action from the context menu (or use action code **d**).
2. Press the Enter key. The updated Configuration Package Object List is displayed.

Transmit a configuration package

Transmitting a configuration package means building a subset IODF and transmitting it to the target system specified in the configuration package. This action can only be carried out from a production IODF. To transmit a configuration package perform the following steps:

1. Select the package from the Configuration Package List and the ***Transmit configuration package*** action from the context menu (or use action code **x**).
2. If the following conditions are fulfilled, the Transmit Configuration Package panel is displayed:
   - The accessed IODF is a production IODF.
   - The selected configuration package contains at least one configuration object (OS or processor).
   - In the selected configuration package a destination user and node are specified.
   - In the selected configuration package a target IODF is specified.

   `Descriptor field 1` is defaulted to the HLQ of the target IODF name in the configuration package; `Descriptor field 2` is defaulted to the 2nd qualifier of the target IODF name in the configuration package.

```
                        Transmit Configuration Package

Package name . . . . . : PACK1        Package for BOEHCD1
High level qualifier . . HCDI         Volume . . . . ______ +
JCL member used  . . . . CBDJXMIT     Space . . . . 32 (4K blocks)

Descriptor field 1 . . . WEID         Descriptor field 2   IODFCC
Target user ID . . . . . WEID         Target node ID . . . BOEHCD1
Operating system status  1  1. Attended
                            2. Unattended (MVS only)

Specify or revise the job control statements for the transmit job.

//HCDIXMT JOB (3243),'WEID',CLASS=A,MSGCLASS=H,REGION=0M,NOTIFY=HCDI
//*
//*
```

   Figure 24. Transmit Configuration Package

3. Review the entry data displayed. You may change `Descriptor field 1`, `Descriptor field 2`, the target user ID and node ID, the Operating system status, the high level qualifier and/or the volume of the IODFs and other data sets to be generated temporarily, as well as the estimated size of the target IODF.

   If you want to use a customized transmit procedure you can specify a different JCL member and/or a JCLLIB parameter in the job control statement area. Once changed, the statements will be retained across sessions. If you want to use different load libraries, specify JOBLIB, because the procedure contains several steps.

If the transfer is performed unattended, the ***Specify Target IODF and User Password*** dialog is displayed. Refer to "User authentication for unattended mode" on page 38 for more information.

The master production IODF is updated with the last sent date and time when the job stream is built. The JCL member provided, CBDJXMIT, consists of the following steps:

1. A temporary work and a temporary production IODF, according to the values entered in the Transmit Configuration Package panel are initialized.
2. The processor configurations included in the selected configuration package are written to a data set and then migrated to the temporary work IODF.

   To generate coupling facility connections, HCD needs both the CF sender and CF receiver channel paths, or peer channel definitions, within the same IODF. Therefore, if a processor of the configuration package contains a connected sending CF channel path, the processor containing the coupling facility partition will be included (with the coupling facility partition only) even if it is not part of the configuration package. (The receiving CF channel paths of the CF partition are indicated as occupied if they have connections to processors outside of the package.)

   The switches and ports which contain connections to a processor of the configuration package are distributed as well. Ports that contain connections to a processor, switch or control unit outside of the scope of the configuration package are indicated as occupied.
3. The OS configurations related to the selected configuration package are written to a data set and then migrated to the temporary work IODF.
4. The switch configurations related to the selected configuration package are written to a data set and then migrated to the temporary work IODF.
5. A temporary production IODF is built from the temporary work IODF.

   The processor token is not changed by this action.
6. The production IODF is exported to the specified user ID and node, attended or unattended, as selected.
7. The temporary work and production IODFs are deleted.

The transmit action can also be carried out using a batch utility. A sample job, CBDSXMIT, has been provided in SYS1.SAMPLIB.

Activity logging and change logging

When you end an HCD session or access a different IODF after modifying some configuration data, and if an activity log is enabled for the currently accessed IODF ("Create or specify an IODF" on page 30 explains how to specify an activity log), then HCD displays an activity log panel, showing the information which will be added to the activity log.

```
Date & Time . . . . . . :   2005-11-07  10:54:46
User  . . . . . . . . . :   BOKA
I/O definition file . . :   'BOKA.IODF00.ACT'
Change reference number :   000002

****** ************************* Top of Data ****************************
000001 Type your log entries here …
000002 …
000003 …
000004 …
****** ************************ Bottom of Data **************************
```

Figure 25. Example of an Activity Log without automatic logging

This information comprises the date and time, the user ID of the user who modified the IODF, the name of that IODF, and a change reference number. You can add your own comments to the log, for example, describing what you have done.

You can enable ***automatic activity logging*** by entering the following keyword into the HCD profile:

```
CHANGE_LOG = YES
```

With this setting, HCD generates automatic entries into the activity log panel, describing the updates on HCD objects, like for example, add, delete, or connect, disconnect. You can see examples of such entries in Figure 26 on page 46. You can edit the entries before you exit this panel.

The activity log panel is an ISPF/PDF panel, so the normal ISPF/PDF rules apply to it. Activity log editing requires the profile option AUTOSAVE ON. When calling the ISPF editor, macro CBDCACTL is used. You can tailor this macro to your installation needs (for example, for setting specific profile options). Use the F3=Exit key to continue.

HCD appends the qualifier ACTLOG to the IODF data set name to create the data set name for the activity log. If the ACTLOG data set does not yet exist, HCD dynamically allocates one using ESOTERIC system defaults (see "SMS-related considerations" on page 328). If you want to use a specific volume, you can specify the volume serial number to allocate a new activity log in the HCD profile (see "Defining an HCD profile" on page 16).

You can view or print the activity log associated with the currently accessed IODF during an HCD session by selecting the option ***Print or compare configuration data*** from the ***Primary Task Selection*** panel and then ***View the activity log*** or ***Print the activity log***.

You can also use the ISPF/PDF facilities to browse or print an activity log.

HCD generates its proposed activity log entries from the change log file. Setting the `CHANGE_LOG = YES` option in the HCD profile causes HCD to create the change log file and store in it all update operations on the related IODF in a wrap-around manner.

The change log file is a VSAM data set. If it is not accessible for any reason, HCD cannot create any automatic activity log entries.

The name of the change log file is built from the related IODF data set name plus the suffix CHLOG. It is allocated in the same size as the related IODF.

You can write the contents of the change log file to the HCD trace data set using the TRACE command with ID=CLOG: `trace on, id=clog, level=8`

With the profile options `CHLOG_VOL` and `ACTLOG_VOL`, in non SMS-managed environments, you can specify the volume serial numbers where to allocate a new change log or activity log.

```
                    View Activity Log

Command ===>                                            Scroll ===> PAGE

Activity log . . : BOKA.IODF00.ACT.ACTLOG

****************************** Top of Data ********************************
REFERENCE   DATE        TIME      USER ID              IODF NAME
________________________________________________________________________________
000001:     2005-10-13  17:02:15  DOCU                    DOCU.IODFA0.TES
        Device 0001 added
        OS device MVS1.0001 added
        Device 0001(2) added
        OS device MVS1.0001(2) added
000002:     2005-10-13  17:14:11  DOCU                    DOCU.IODFA0.TES
        Processor PROC2 added
        CSS PROC2.0(2) added
        Device 0003 added
        OS device MVS1.0003 added
________________________________________________________________________________
****************************** Bottom of Data *****************************

 F1=HELP        F2=SPLIT       F3=END         F4=RETURN      F5=RFIND
 F6=RCHANGE     F7=UP          F8=DOWN        F9=SWAP       F10=LEFT
 F11=RIGHT      F12=RETRIEVE
```

Figure 26. View Activity Log

Rules for automatic activity logging

HCD applies the following rules during automatic activity logging:

- When creating an object with immediate updates without leaving HCD, HCD only creates an *'add object'* log entry in the activity log.
- When updating the same object multiple times during one HCD session, HCD creates only one *update object* entry.
- Consecutive IDs, for example for channel subsystems, channel paths, control units or devices, are marked with a 'quantity' number in parenthesis behind the starting ID.
- When repeating an object into a new IODF, no entry is created in the target IODF since this IODF is not in access by the user.

Actions performed on IODFs and related activity and change log files

- When you delete an IODF, HCD also deletes the related activity and change log files.
- When you copy an IODF, HCD also copies the activity log file with all its contents. However, HCD does not copy the change log file. Instead, a new change log file is created for the new IODF.
- When you build a production IODF, HCD copies the activity log file, but not the change log file.
- When you enable or disable an IODF for multi-user access, the same action is applied to the change log file. Before an update request is performed on an IODF, the change log file is refreshed to have the latest updates available. The activities of multiple users are logged in chronological order.
- An activity log data set is not enabled for multi-user access. If multiple users simultaneously access and update the related IODF, the activity log file is accessed sequentially in the order the users end the HCD session or access a different IODF. The users' activity log entries are written to the data set grouped by the user ID.

IODF release level compatibility

HCD supports IODF Version 5. For migrating from a previous IODF version, see the HCD documentation of your former release.

Chapter 5. How to use the dialog

Overview

This information unit explains the following topics:

- Window layout
- Working with lists
- Promptable fields
- Commands and function keys
- Getting help
- Navigating through the dialog
- Filtering
- Job statement information used in dialogs

Window layout

Figure 27 on page 49 explains the areas of an HCD dialog window. These areas appear in the same position on every window unless you use ISPF to change the position of the command line. Not all areas are included on all dialogs.

```
  Goto  Filter  Backup  Query  Help                                          1
------------------------------------------------------------------------------
                              I/O Device List       Row 1 of 14   More:      > 2
Command ===> ____________________________________________ Scroll ===> PAGE

Select one or more devices, then press Enter. To add, use F11.                3

  ----------Device------ --#--- --------Control Unit Numbers + --------
/ Number   Type +        CSS OS 1--- 2--- 3--- 4--- 5--- 6--- 7--- 8---
_ 0001     3278-3        3   2  00E1 ____ ____ ____ ____ ____ ____ ____
_ 0002     3279-2        3   4  0097 ____ ____ ____ ____ ____ ____ ____
_ 0098     9033          2      0098 ____ ____ ____ ____ ____ ____ ____
_ 0099     9032          2      0099 ____ ____ ____ ____ ____ ____ ____          4
_ 00C1     3480          2   1  00C1 ____ ____ ____ ____ ____ ____ ____
_ 01D1     3390          2   1  00D1 ____ ____ ____ ____ ____ ____ ____
_ 01D2     3390          2      00D1 ____ ____ ____ ____ ____ ____ ____
_ 01D3     3390          2      00D1 ____ ____ ____ ____ ____ ____ ____
_ 01D4     3390          2   1  00D1 ____ ____ ____ ____ ____ ____ ____
# FFFC     CFS                  FFFE ____ ____ ____ ____ ____ ____ ____
# FFFD     CFS                  FFFE ____ ____ ____ ____ ____ ____ ____
# FFFE     CFS                  FFFE ____ ____ ____ ____ ____ ____ ____
# FFFF     CFS                  FFFE ____ ____ ____ ____ ____ ____ ____
 F1=Help      F2=Split     F3=Exit      F4=Prompt    F5=Reset     F7=Backward
 F8=Forward   F9=Swap     F10=Actions  F11=Add      F12=Cancel   F13=Instruct
F20=Right    F22=Command
```

Figure 27. Example of a window layout

1

Action bar.

HCD provides an action bar-driven interface. You can select any of the action bar choices and display pull-down choices. Use F10=Actions to move the cursor to the action bar.

2

Title Line.

- Shows the window title.
- Displays window identifiers, if you have asked for them.

© Copyright IBM Corp. 1994, 2022

- Displays positional information for the work area:

  `Row 1 of 3302` specifies that the first row of data that is displayed in the work area is the first row of 3302 available rows.

  `More:  >` specifies that more data can be seen by moving the work area to the right using F20=Right. This can also be `More:  <`, which means moving is possible to the left, or `More:  <  >`, which means moving is possible to the left and right.

  Instead of `Row 1 of 3302`, `Filter Mode` would be shown if the action list is filtered. For additional information, refer to "Filtering" on page 61.

3

Instruction Area.

Tells you how to proceed on the dialog window. On action lists (see "Action lists" on page 52) you can get more instruction information by pressing the F13=Instruct key or by using the INSTRUCT command.

4

Work Area.

You can use the following facilities to control the work area:

- The ***Filter*** action reduces the number of objects in an object list; this is described further in "Filtering" on page 61.
- The F7=Backward and F8=Forward keys scroll the work area backward and forward. The end of the information is indicated by a line containing `- end -` or `BOTTOM OF DATA`.
- The F19=Left and F20=Right keys move the work area of an action list left and right (or RIGHT and LEFT command).
- The LOCATE command scrolls an object list so that a specific object (or the nearest lower match) is at the top of the work area. Search criteria is the object identifier shown in the leftmost data column.
- The TOP command scrolls backward to the top of the work area.
- The BOTTOM command scrolls forward to the bottom of the work area.

Figure 28 on page 50 shows the areas of a data entry dialog.

```
              Add Channel Path


 Specify or revise the following values.

 Processor ID . . . . : GA2
 Configuration mode . : LPAR
 Channel Subsystem ID : 0

 Channel path ID  . . . . __    +            Channel ID . . . ___
 Number of CHPIDs . . . . 1
 Channel path type  . . . ___   +
 Operation mode . . . . . DED   +
 Managed  . . . . . . . . No   (Yes or No)   I/O Cluster ________  +
 Description  . . . . . . ________________________________

 Specify the following values only if connected to a switch:
 Dynamic switch ID  . . . __  + (00 - FF)
 Entry switch ID  . . . . __  +
 Entry port . . . . . . . __  +
 F1=Help  F2=Split  F3=Exit  F4=Prompt  F5=Reset  F9=Swap
 F12=Cancel
```

Figure 28. Layout of a data entry dialog

This panel has the following characteristics:

- The position and length of empty entry fields are shown by underscore characters (_) and highlighting. If an entry field contains an entry, the underscore characters are not shown.
- Fields that you cannot change are preceded by a colon (:).

- Fields that you must complete may (depending on the terminal) be highlighted by a different color.
- Input fields with a plus sign (+) indicate that you can prompt information for this field using F4=Prompt. For more information on the prompt facility, refer to "Promptable fields" on page 56.

Working with lists

HCD presents most of the information in form of lists. Depending on the list, there are different methods to select an item from the list or to perform actions. The different types of lists are:

- Numbered selection lists
- Unnumbered single selection lists
- Unnumbered multiple selection lists
- Action lists
- Message lists

This section describes the different types of lists and the respective selection methods.

Numbered selection lists

To select an item from a numbered selection list, type the number you want to select in the input field (precedes the first list item) and press the Enter key. An example of a numbered list is the HCD ***Primary Task Selection*** panel (see Figure 29 on page 51), displayed when you start an HCD session.

```
                         z/OS V2R2 HCD
Command ===> _______________________________________________________

                             Hardware Configuration

Select one of the following.

-   0.  Edit profile options and policies
    1.  Define, modify, or view configuration data
    2.  Activate or process configuration data
    3.  Print or compare configuration data
    4.  Create or view graphical configuration report
    5.  Migrate configuration data
    6.  Maintain I/O definition files
    7.  Query supported hardware and installed UIMs
    8.  Getting started with this dialog
    9.  What's new in this release

For options 1 to 5, specify the name of the IODF to be used.

I/O definition file . . . 'DOCU.IODF00.HCD.WORK'                 +
```

Figure 29. ***Primary Task Selection*** *panel*

Unnumbered single selection lists

To select a list item from an unnumbered list from which you can select only one item, you can:

- Place the cursor in front of a list item and press the Enter key
- Select a list item with an **s** or a **/** (slash) and press the Enter key.

Figure 30 on page 52 is an example of a list of IODFs from which you can select one IODF.

You can request a list like the one in Figure 30 on page 52 by pressing F4=Prompt while your cursor is on the `I/O definition file` entry field (Figure 29 on page 51). For more details concerning prompting, refer to "Promptable fields" on page 56.

```
                  Available IODFs
                                                                Row 1 of 24
Command ===> _______________________________________________________

Select an IODF name.

  IODF Name                           MUA  Volume  Size    Created

  DOCU.IODFAA.CTC.SCEN1               Yes  HCDSMS  1080    2008-10-21
  DOCU.IODFAA.CTC.SCEN2A              Yes  HCDSMS  1080    2008-10-21
  DOCU.IODFAA.CTC.SCEN2B              No   HCDSMS  1080    2008-10-21
  DOCU.IODFAA.CTC.SCEN2C              Yes  HCDSM2  1080    2008-10-22
  DOCU.IODF00.HCD.PROD                     MIGRAT          2008-02-01
  DOCU.IODF00.HCD.WORK                     MIGRAT          2008-02-01
  DOCU.IODF00.HCM.TUTORIAL.PROD       No   HCDSMS  2880    2008-06-17
  DOCU.IODF00.HCM.TUTORIAL.WORK       Yes  HCDSM3  2160    2008-09-12
  DOCU.IODF00.ZOS111.WORK             No   HCDSMS  2880    2008-09-26
  DOCU.IODF01.ZOS110.HCDUG            Yes  HCDSMS  1080    2007-09-27
  DOCU.IODF44.MAINT.WORK                   MIGRAT          2008-03-06

 F1=Help       F2=Split      F3=Exit       F7=Backward   F8=Forward
 F9=Swap      F12=Cancel    F14=SortName  F15=SortSize  F16=SortDate
F22=Command
```

Figure 30. Example of a single selection list

Note: For migrated IODFs (with indication MIGRAT in column ***Volume***), HCD cannot determine the MUA-status and the size and therefore, columns ***MUA*** and ***Size*** remain blank in such cases.

Unnumbered multiple selection lists

To select a list item from an unnumbered list, from which you can select one or more list items, place a slash (/) in front of one or several list items and press the Enter key. In some cases, list items in unnumbered multiple selection lists are already preselected. You can overwrite this preselection.

To select a range of objects, you can place a left parenthesis (in front of the first item in the range and a right parenthesis) in front of the last item in the range. See also "Using the context menu" on page 53.

Figure 31 on page 52 is an example of an unnumbered multiple selection list.

```
                       Define Access List
                                                          Row 1 of 2
 Command ===> ________________________________________ Scroll ===> CSR

 Select one or more partitions for inclusion in the access list.

 Channel subsystem ID : 0
 Channel path ID .....: 99        Channel pathy type .: FC
 Operation mode ......: DED       Number of CHPIDs ...: 1

 /CSS ID Partition Name           Number Usage Description
 _0   HUGO                        2      OS
 _0   LPAR01                      1      CF/OS
 ************************ Bottom of data ******************************
```

Figure 31. Example of a Multiple Selection List

Action lists

Figure 33 on page 54 is an example of an action list. You see a panel like this one when you want to define, modify, or view I/O devices.

HCD uses the concept of object-to-action processing. That is, to work with an object, you first have to select the object, and then the action. For some actions, you do not have to explicitly select an object; for example, to add an object to an action list.

In an action list, you have several possibilities to perform an action on a list object:

- Using the context menu
- Using the action code
- Typing over data in the panel

Using the context menu

To perform an action on one or several objects in an action list, you can use the context menu:

1. Select an object by placing a slash **/** in front of a list item.

   To select a range of objects, you can place a left parenthesis **(** in front of the first item in the range and a right parenthesis **)** in front of the last item in the range.

2. Press the Enter key. HCD displays a context menu showing all valid actions for the selected objects.

```
   Goto  Filter  Backup  Query  Help
 -------------  Actions on selected devices

 Command ===>
                Select by number or action code and press Enter.
 Select one or
               2  1.  Add like  . . . . . . . . . . . . . (a)
   -------Devi     2.  Change  . . . . . . . . . . . . . (c)
 / Number Type     3.  CSS group change  . . . . . . . . . (g)
 ( 0001   3278     4.  OS group change . . . . . . . . . . (o)
 _ 0098   9033     5.  Device type group change  . . . . . (t)
 _ 0099   9032     6.  Subchannel Set ID group change  . . (m)
 _ 009A   9032     7.  (no longer supported)
 _ 00C1   3480     8.  Delete  . . . . . . . . . . . . . . (d)
 _ 01D1   3390     9.  View device definition  . . . . . . (v)
 _ 01D2   3390     10. View logical CU information . . . . (l)
 _ 01D3   3390     11. View related CTC connections  . . . (k)
 ) 01D4   3390     12. **View graphically  . . . . . . . . (h)
 _ 01D5   3390
 _ 01D6   3390  * = requires GDDM
 / 01D7   3390   F1=Help     F2=Split    F3=Exit     F9=Swap    F12=Cancel
 _ 01D8   3390
 _ 01D9   3390          2  1  00D1 ____ ____ ____ ____ ____ ____ ____
  F1=Help      F2=Split     F3=Exit      F4=Prompt    F5=Reset     F7=Backward
  F8=Forward   F9=Swap     F10=Actions  F11=Add      F12=Cancel   F13=Instruct
 F20=Right    F22=Command
```

   Figure 32. Action list with a context menu

3. Select an action by entering the number or action code (letter in parentheses) in the entry field. After pressing the Enter key, the context menu is closed and the action is performed for the selected rows.

   If only one action is possible on an action list panel, the context menu is not shown, but the action is performed immediately after entering a **/** (slash) or an **s**.

In the example in Figure 32 on page 53, the following objects are changed:

- Objects 0001 through 01D4, and
- Object 01D6

A # marker in the selection column indicates that the row is disabled and not available for processing. For example, coupling facility devices are marked in such a way.

Using the action code

As you get familiar with the dialog, you might find it easier to select a list item and an action in one operation by means of an action code. To do this, enter the action code in the action column, which is the entry field to the left of the associated list item; then press the Enter key. Figure 33 on page 54 shows an example (**d** for delete and **c** for change).

```
  Goto  Filter  Backup  Query  Help
 ------------------------------------------------------------------------------
                              I/O Device List       Row 1 of 1443 More:       >
 Command ===> ___________________________________________ Scroll ===> PAGE

 Select one or more devices, then press Enter. To add, use F11.

  ----------Device------ --#--- --------Control Unit Numbers + --------
/ Number   Type +        CSS OS 1--- 2--- 3--- 4--- 5--- 6--- 7--- 8---
_ 0001     9032-3        3   4  0001 ____ ____ ____ ____ ____ ____ ____
_ 0002     9032-3        3   4  0002 ____ ____ ____ ____ ____ ____ ____
d 0020     BSC1          4   4  00E0 ____ ____ ____ ____ ____ ____ ____
_ 0021     BSC2          4   4  00E0 ____ ____ ____ ____ ____ ____ ____
_ 0022     BSC2          4   4  00E0 ____ ____ ____ ____ ____ ____ ____
_ 0023     BSC1          4   4  00E0 ____ ____ ____ ____ ____ ____ ____
_ 0024     BSC1          4   4  00E0 ____ ____ ____ ____ ____ ____ ____
c 0025     BSC2          4   4  00E0 ____ ____ ____ ____ ____ ____ ____
_ 0026     BSC1          4   4  00E0 ____ ____ ____ ____ ____ ____ ____
d 0027     BSC1          4   4  00E0 ____ ____ ____ ____ ____ ____ ____
_ 0028     TWX           1   4  00E0 ____ ____ ____ ____ ____ ____ ____
_ 0029     BSC1          4   4  00E0 ____ ____ ____ ____ ____ ____ ____
_ 002A     BSC1          4   4  00E0 ____ ____ ____ ____ ____ ____ ____
_ 002B     BSC1          4   4  00E0 ____ ____ ____ ____ ____ ____ ____
_ 002C     BSC2          4   4  00E0 ____ ____ ____ ____ ____ ____ ____
_ 002D     BSC1          4   4  00E0 ____ ____ ____ ____ ____ ____ ____
# FFFC     CFS           1   4  FFFE ____ ____ ____ ____ ____ ____ ____

  F1=Help      F2=Split     F3=Exit      F4=Prompt    F5=Reset     F7=Backward
  F8=Forward   F9=Swap     F10=Actions  F11=Add      F12=Cancel   F13=Instruct
 F20=Right    F22=Command
```

Figure 33. Action list with action codes

You can select more than one list element and, if necessary, you can specify different action codes for each of the objects. You are first asked to confirm the deletions. Then the other actions (for example, in Figure 33 on page 54 a change **c**) are performed sequentially row after row.

To get a list of action codes, place the cursor in the action column field and then press the F4=Prompt key. The same context menu is shown when using the **/** in front of a list item and pressing the Enter key. For an example, see Figure 32 on page 53, or Appendix A, “How to navigate through the dialog,” on page 331. If you press the F1=Help key instead of the F4=Prompt key, you get a list from which you can request explanation of the action codes.

Action codes and selection markers

You can also specify individual action codes within a marked range. If you do so, the following rules apply:

- When you press the Enter key, the single action codes are processed. The row selected with selection markers are not processed, they are still shown after processing the action codes.
- When you press the Enter key again, HCD shows the context menu for the rows selected with selection markers.

After successful operation, selection markers and action codes are removed from the list. If the operation is interrupted due to an error, selection markers and action codes not yet processed are still shown. You can remove them by pressing the F5=Reset key.

Typing over existing data

You can also make changes to editable fields by typing in new data or typing over existing data directly on the displayed panel.

You have to press the Enter key to process the changes. HCD then validates the data and displays the panel again. The changes are processed sequentially row after row. Changes, which would need a processing of multiple row changes at once will not be possible.

When you exit action lists, all changes to the list since you last pressed the Enter key are cancelled.

You can use the F5=Reset key to reset the values of all fields that you have changed since you last pressed the Enter key.

Message lists

One single operation can produce multiple messages. In this case, HCD displays a message list. You can then:

- Use the ***Explain message*** action from the context menu (or action code **e**) to get an explanation of the message.

```
                                  Message List
  Save  Query  Help
 ------------------------------------------------------------------------
                                                                Row 1 of 52
 Command ===> ___________________________________________ Scroll ===> PAGE

 Messages are sorted by severity. Select one or more, then press Enter.

 / Sev Msg. ID  Message Text
 e E   CBDG060I A switch and a port must be specified for control unit
 #              0090 to connect the control unit to channel path 34 of
 #              processor CTC01.
 _ E   CBDG060I A switch and a port must be specified for control unit
 #              0098 to connect the control unit to channel path 34 of
 #              processor CTC01.
 _ E   CBDG060I A switch and a port must be specified for control unit
 #              0300 to connect the control unit to channel path 61 of
 #              processor PR9672.
 _ E   CBDG065I The switch control unit 0000 of switch 00 has no channel
 #              path attached via the switch.
  F1=Help        F2=Split       F3=Exit        F4=Prompt      F5=Reset
  F7=Backward    F8=Forward     F9=Swap       F10=Actions    F12=Cancel
 F13=Instruct   F22=Command
```

Figure 34. Message List

```
                             Message List

Command ===>                                          Scroll ===> PAGE
CBDG060I A switch and a port must be specified for control unit
 0090 to connect the control unit to channel path 34 of processor
 CTC01.
Explanation:
 A channel path is connected to a switch, therefore all control
 units on this channel path must be connected to a switch also.

System Action:
 System waits for user action.

User Response:
 Specify a switch and a port for the control unit.
- end -
```

Figure 35. Explanation Message

- Use the ***Delete message*** action from the context menu (or action code **d**) to delete a message from the message list.
- Select ***Save messages*** from the ***Save*** action bar to save the displayed messages in the corresponding message log file.

The messages in Figure 34 on page 55 are sorted by severity, which is indicated in column ***Sev***:

- Messages with severity code ***T*** (terminating) and ***E*** (error) require your intervention before you can continue to work with HCD.
- For warning messages there are two severity codes ***S*** (severe warning) and ***W*** (normal warning). Both severities let you finish the current HCD function. However, you should carefully consider the warnings and it is recommended to remove the reason of the messages.
- Messages preceded by severity code ***I*** are informational messages.

Promptable fields

The HCD prompt facility reduces what you have to remember, what you have to type, and, possibly, what you have to correct due to typing errors. You can use the prompt facility if there is a plus sign (+) to the right of an entry field (or its column heading on an action list). Just place the cursor on the entry field and press the F4=Prompt key.

HCD then displays a prompt selection menu that lists all the values that are currently valid for the field. For long lists (of I/O devices, for example), HCD first displays a menu to let you limit the values listed (to only DASD devices, for example).

```
                        Add Partition


 Specify the following values.

 Partition name . . . PROD
 Partition number . . 1
 Partition usage  . . OS     +
 UID uniqueness . . . N      (Y/N)
                     Available Partition Usage Types
 Description                                            Row 1 of 3

          Select one.
  F1=Hel
  F9=Swa    Usage   Explanation
             OS      Operating system
             CF      Coupling facility
             CF/OS   Coupling facility or operating system
           ***************** BOTTOM OF DATA ******************
```

Figure 36. Example of a Prompt Selection Panel

Prompt is also available for the action column. For this purpose you must place the cursor on the action column. HCD displays the same context menu as when using the **/** (slash) in the action column and pressing the Enter key. For an example, see Figure 32 on page 53. Note that there is no '+' sign shown for the action column heading.

To select a value, place the cursor to the left of (or on) that value or select the value with **s** or **/** (slash), then press the Enter key. HCD inserts that value into the entry field or, in case of selecting an action, performs that action immediately.

The prompt list is built dynamically; if a value can be used only once in a configuration then, after it has been selected, either it does not appear in the list again, or it is marked as nonselectable - with the hash sign (#).

Note: It is possible that HCD initially accepts a selection, but rejects it later after further validation when the entered context information is completed.

Some promptable fields can have a large number of choices, for example prompts for device numbers or control unit numbers. In these cases HCD limits the values to a maximum of 128 entries. If the value, you are looking for, is not contained in the choices, you can enter a reference number into the field. If you then press the F4=Prompt key, HCD will display the numbers that follow the reference number.

Commands and function keys

All HCD list panels have a command line on which you can enter the usual ISPF commands, TSO commands, or specific HCD commands.

You can use F22=Command to move the cursor to the command line. When the cursor is in the command line, F22=Command lets you step back through the commands that you have previously entered (including ISPF commands).

The HCD dialog uses 24 function keys, if your ISPF session allows the use of 24 function keys. The function keys assignments can be shown or hidden by entering PFSHOW in the command line.

To perform a function, just press that function key.

Getting help

HCD offers an extensive help facility. From any panel, you can get context-sensitive help by pressing the F1=Help key. Table 3 on page 57 shortly explains the available types of help and how to obtain it.

Table 3. Online Help Information

Type of Help	Description	How to Get Help
Field	An explanation of what you can enter in a specific entry field on the current panel.	Place the cursor in the entry field and press the F1=Help key.
Extended	Gives information on the content and task of a function panel.	Move the cursor to a non-interactive field in the function panel and press F1, or select Extended help in the action bar, or press F2=Ex_help in field help panels.
Instruction	Specific instructions on what you can do on the current action list panel.	Press the F13=Instruct key. Or select ***Help*** from the action bar.
Command	An explanation of the HCD commands that you can enter in the command line.	Place the cursor in the command line and press the F1=Help key. For detailed help on a specific command, type the name of the command and press the F1=Help key.
Keys	An explanation of the function keys.	Press the F1=Help key, then press the F9=Keyshelp key from the help panel. Or select ***Help*** from the action bar.
Reference Phrase	An explanation of any of the highlighted words or phrases that appear on a help panel.	Place the cursor on the word or phrase and press the Enter key.
Message	An explanation of a message that is displayed on the current panel.	Press the F1=Help key when a message is displayed, regardless of the cursor position.
Help for Help	A general explanation of how to use the help facility.	Press the F1=Help key, then press the F1=Help key again from the help panel. Or select ***Help*** from the action bar.
Action Bar	An explanation of the action bar of a panel.	Request extended help, then place the cursor on the reference phrase of the action you want help for, and press Enter.

On a help panel, you can use F5=Window to change the size of the window, to reduce the scrolling required, or to see more of the underlying panel.

Navigating through the dialog

Most tasks you do with HCD are done in one step. However, some tasks need more than one step (*multi-step tasks*). For example, when you define an I/O device, you usually want to define the processor and operating system data for that device at the same time. HCD lets you define this data together, in one task, by displaying a sequence of panels in a predefined order.

Moving forward and backward within a task

The following function keys are available to move forward and backward in a multi-step task.

Enter
Displays the next panel in the predefined order. HCD validates your data, but does *not* save it in the IODF until you complete the task. At the end of the task, HCD redisplays the action list that precedes the task.

F3=Exit
Completes the task. HCD saves in the IODF all valid data that you have entered so far in the task (plus any data in the following steps that has been inherited by, for example, an ***Add like*** action). It then redisplays the action list.

F6=Previous
Available on the second and subsequent steps. It cancels the current step and redisplays the previous panel. Any data that you have entered on the current panel is lost.

F12=Cancel
Cancels the current task. Data entered in the current step is lost but, if you have entered data in any of the previous steps, HCD gives you the option to save that data (and any inherited data in the following steps) in the IODF.

Fast path

HCD offers you a fast path to jump directly from an action list to another panel without having to navigate through the dialog.

HCD offers you two possibilities to use this fast path:

- Using the ***Goto*** action bar choice
- Using the GOTO command

Using the action bar choice

Select the ***Goto*** action bar choice and on the resulting pull-down menu the target object you want to navigate to.

```
  Goto  Filter  Backup  Query  Help
                                      -------------------------------------
    1. Operating systems              ce List         Row 1 of 16 More:       >
    2. EDTs ...                       ___________________ Scroll ===> PAGE
    3. Esoterics ...
    4. Generics ...                   s Enter. To add, use F11.
    5. Consoles ...
    6. Switches                       Control Unit Numbers + --------
    7. Ports ...                      - 3--- 4--- 5--- 6--- 7--- 8--- Base
    8. Switch Configurations ...      _ ____ ____ ____ ____ ____ ____
    9. Port Matrix ...                _ ____ ____ ____ ____ ____ ____
   10. Processors                     _ ____ ____ ____ ____ ____ ____
   11. Partitions ...                 _ ____ ____ ____ ____ ____ ____
   12. CHPIDs ...                     _ ____ ____ ____ ____ ____ ____
   13. PCIe Functions ...             _ ____ ____ ____ ____ ____ ____
   14. Control units                  _ ____ ____ ____ ____ ____ ____
   15. Devices                        _ ____ ____ ____ ____ ____ ____
   16. Migrate configuration data     _ ____ ____ ____ ____ ____ ____
   17. Leave HCD                      _ ____ ____ ____ ____ ____ ____
                                      _ ____ ____ ____ ____ ____ ____
_ 01D7   3390          2  1  00D1 ____ ____ ____ ____ ____ ____ ____
_ 01D8   3390          2  1  00D1 ____ ____ ____ ____ ____ ____ ____
 F1=Help      F2=Split     F3=Exit      F4=Prompt    F5=Reset     F7=Backward
 F8=Forward   F9=Swap     F10=Actions  F11=Add      F12=Cancel   F13=Instruct
 F20=Right    F22=Command
```

Figure 37. Using the Goto Action Bar Choice

Objects marked with … are associated with another object (for example, an EDT list is associated with an operating system). If you select such an object, HCD displays a list on which you can select the associated object:

```
 Goto  Backup  Query  Help
 ------------------------------------------------------------------------------
                    Operating System Configuration List              Row 1 of 8
 Command ===> ___________________________________________ Scroll ===> CSR

 Select one or more operating system configurations, then press Enter. To
 add, use F11.

 / Config. ID  Type     Gen  Description                      D/R site OS ID
 _ DRMVSA      MVS      Yes  generated from MVSA
 _ DRMVSB      MVS      Yes  generated from MVSB
 _ DRMVSC      MVS      Yes  generated from MVSC
 _ DRMVSE      MVS      Yes  generated from MVSE
 _ MVSA        MVS           ________________________________ DRMVSA
 _ MVSB        MVS           ________________________________ DRMVSB
 _ MVSC        MVS           ________________________________ DRMVSC
 _ MVSE        MVS           ________________________________ DRMVSE
 ****************************** Bottom of data ********************************

F1=Help      F2=Split    F3=Exit      F4=Prompt    F5=Reset     F7=Backward
F8=Forward   F9=Swap     F10=Actions  F11=Add      F12=Cancel
```

Figure 38. Operating System Configuration List as example of a Selection List

Using the GOTO command

Specify GOTO (or just GO) and the target you want to jump to in the HCD command line. If you type GOTO without a target, a panel is displayed showing the same list of target objects as when using the ***Goto*** pull-down menu.

You can also jump to list panels that are associated with another object (for example, to the EDT list associated with an operating system). In this case, specify both the target and the object with which it is associated. If you omit this object, a selection list is displayed (for example, the Available Operating System list appears when going to the EDT list).

Optionally, you can also specify the object that will be shown as the first element of a list if you jump to a list panel.

The following figure shows the syntax of the command. The parameters can be separated by either blank, comma, or dot.

GOTO command:

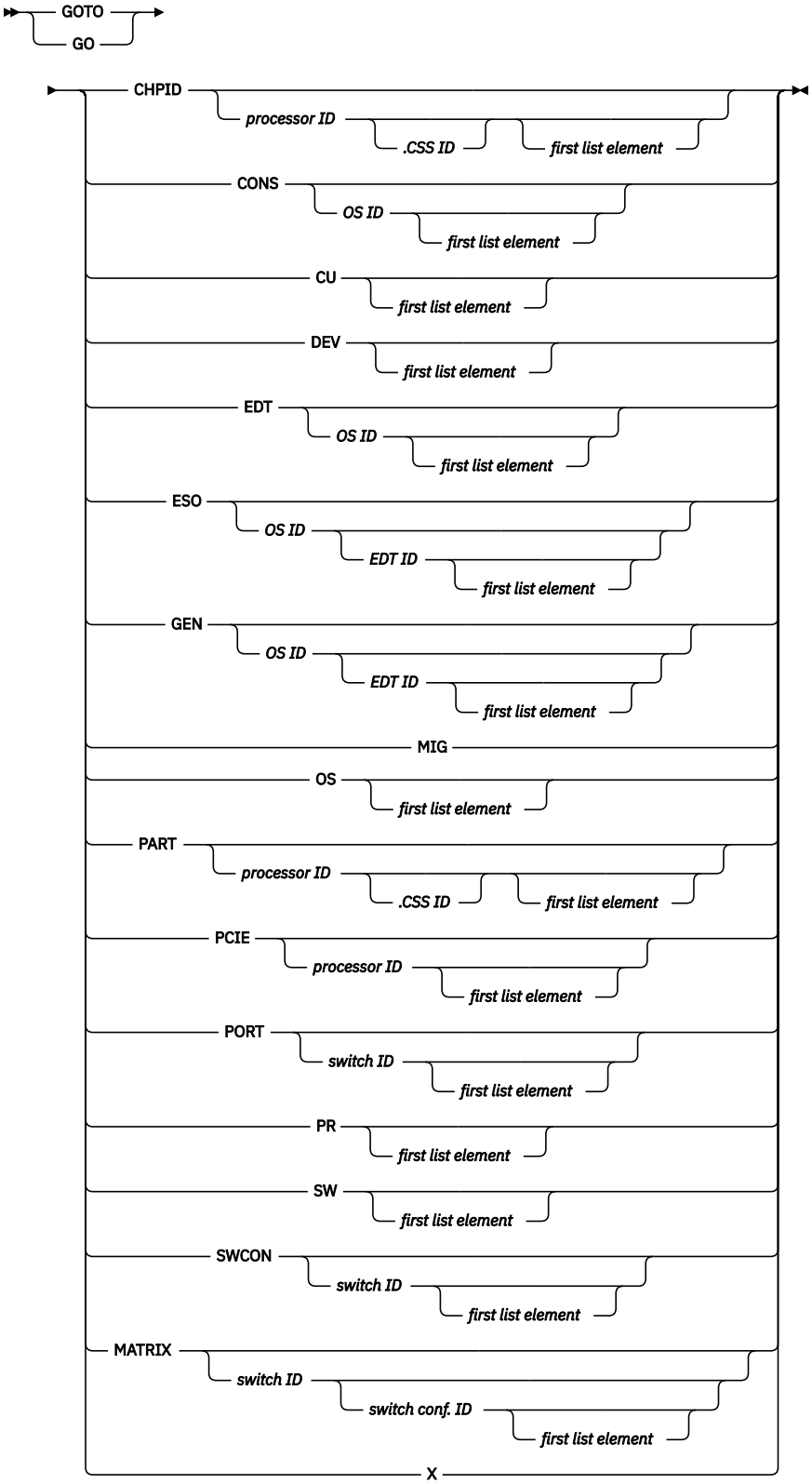

CHPID
Channel path list

CONS
Console list

CU
Control unit list

DEV
Device list

EDT
EDT list

ESO
Esoteric list

GEN
Generic list

MIG
Migrate configuration data

OS
OS configuration list

PART
Partition list

PCIE
PCIE function list

PORT
Port list

PR
Processor list

SW
Switch list

SWCON
Switch configuration

MATRIX
Port matrix

X
Leave HCD

First list element
The object that will be shown as the first element of a list if you jump to a list panel (same as if using the LOCATE command).

Examples

To go to the channel path list of processor SYSA and display CHPID 27 as the first element of the list, enter:

```
GO CHPID SYSA 27
```

To go to the esoterics list of EDT A1 in operating system MVSPROD and display the esoteric group ESO12 as the first element in the list, enter:

```
GO ESO MVSPROD A1 ESO12
```

To specify the processor ID and channel subsystem ID for XMP processors in GOTO PART or GOTO CHPID commands, you use the dot to concatenate both parts:

```
GO PART P2084.3
```

Filtering

If a displayed object list is too long, and scrolling back and forth is getting cumbersome, you may use the ***Filter*** function that lets you limit the displayed information. The ***Filter*** function is available when the action bar shows a ***Filter*** action bar choice. This is the case in a:

- Processor list
- Channel path list
- CTC connection list
- CF channel path connectivity list
- Switch list
- PCIe function list
- Port list

- Control unit list
- Device list
- Esoteric list
- I/O Path list

For example, on the device list, you can limit the displayed information by the following filter criteria:

- Device type
- Device group
- Whether the devices are defined to an operating system or not
- Serial number and description
- Volume serial number
- Device parameters and features (if you navigated to the I/O Device List via the operating system configuration list)
- Whether the devices are connected to a control unit or not
- Up to four control units, to which the devices may be connected
- Subchannel set ID

Rather than seeing all devices defined in the IODF, you see only those devices that are, for example, of a certain type connected to a certain control unit.

How to request filtering is illustrated in the following scenario:

1. Navigate to a processor's ***I/O Device List***. Note that for XMP processors you first need to navigate to its ***Channel Subsystem List*** and then to its ***I/O Device List***. Now tab to the action bar and select ***Filter*** from the action bar. The pull-down menu shown in Figure 39 on page 62 is displayed:

```
  Goto  Filter  Backup  Query  Help
--------------------------------
          1. Set Filter                            Row 1 of 6 More:       >
Command   2. Clear Filter                  __________ Scroll ===> CSR
          3. Count rows on (filtered) list
Select  To add, use F11.

Processor ID : TSPROC1    Proc supporting multiple SSs       CSS ID : 0

  ----------Device--------- --#-- --------Control Unit Numbers + --------
/ Number   Type +        SS IM OS 1--- 2--- 3--- 4--- 5--- 6--- 7--- 8---
_ 0001     3390A         0  0  1  0001 0002 ____ ____ ____ ____ ____ ____
_ 0001     3390A         1  2  1  0001 ____ ____ ____ ____ ____ ____ ____
_ 0002,4   3390A         1  2  1  0001 ____ ____ ____ ____ ____ ____ ____
_ 0002,8   3390A         0  2     0001 0002 ____ ____ ____ ____ ____ ____
_ 0006,3   3390          0  2  1  0001 ____ ____ ____ ____ ____ ____ ____
_ 000A     3380          0  2  1  0001 ____ ____ ____ ____ ____ ____ ____
****************************** Bottom of data ******************************

 F1=Help      F2=Split     F3=Exit      F4=Prompt    F5=Reset     F7=Backward
 F8=Forward   F9=Swap     F10=Actions  F11=Add      F12=Cancel   F13=Instruct
F20=Right    F22=Command
```

Figure 39. Filter example

2. Select ***Set Filter***. This displays the Filter I/O Device List (Figure 40 on page 63), tailored for the underlying I/O Device List, where you can specify your filter criteria. Note that for example, the 'Subchannel set ID' filter criteria is only available for the I/O Device List if invoked from the Channel Subsystem List of a z9 EC processor or later model, or from the Operating System Configuration List (action code **u** in both cases). Similar panels are displayed for the other lists.

   An alternative way to select filtering is to tab to the command line and type in FILTER SET.

```
                    Filter I/O Device List


 Specify or revise the following filter criteria.

 Device type  . . . . 3390A___  +
 Device group . . . . ________  +
 Subchannel set ID  . 0  +

 Defined to OSs . . . Y  (Y = Yes; N = No)

 Serial number  . . . __________
 Description  . . . . ________________________________

 Volume serial number . . . . . . . ______  (for DASD)

 Connected to CUs . . _  (Y = Connected; N = Not connected)
 Specific CUs . . . . ____  or  ____  or  ____  or  ____


  F1=Help     F2=Split    F3=Exit     F4=Prompt   F5=Reset
  F9=Swap    F12=Cancel
```

Figure 40. Filter I/O Device List

3. On this filter panel you can specify one or more filter criteria. All specified filter criteria must match to display the item. For example, if you specify a device type and a subchannel set where the devices of this type should be defined, and then press the Enter key, the I/O Device List is displayed again, now showing only those devices that match these filter criteria. Figure 41 on page 63 shows an example of a filtered list. If `Filter Mode` is displayed in the right top corner of the panel, it indicates that the filter mode is active.

```
  Goto  Filter  Backup  Query  Help
------------------------------------------------------------------------------
                            I/O Device List        Filter Mode. More:       >
Command ===> ___________________________________________ Scroll ===> CSR

Select one or more devices, then press Enter. To add, use F11.

Processor ID : MSSPROC1   Proc with multiple SSIDs           CSS ID : 0

  ----------Device--------- --#-- --------Control Unit Numbers + --------
/ Number   Type +        SS IM OS 1--- 2--- 3--- 4--- 5--- 6--- 7--- 8---
_ 0001     3390A         0  0  1  0001 0002 ____ ____ ____ ____ ____ ____
_ 0002,8   3390A         0  2     0001 0002 ____ ____ ____ ____ ____ ____
****************************** Bottom of data ***************************

 F1=Help      F2=Split     F3=Exit      F4=Prompt    F5=Reset     F7=Backward
 F8=Forward   F9=Swap     F10=Actions  F11=Add      F12=Cancel   F13=Instruct
F20=Right    F22=Command
```

Figure 41. Reduced I/O Device List (using a filter)

Most of the entry fields support wildcards, that means that an asterisk (*) can be specified in front and/or after the specified term. The following table illustrates the wildcard processing using the device type field as an example.

Specified Term	Result
3380	Displays all devices of type 3380
3380*	Displays all devices of type 3380 regardless of its model
338*	Displays all devices whose type starts with '338'
*80	Displays all devices whose type ends with '80'
42	Displays all devices containing the string '42' within the type, for example 3420.

Use Field Help on the Filter panel to get information on whether wildcards are supported or not.

To remove the filter, use ***Clear Filter*** from the ***Filter*** action bar, or enter FILTER CLEAR in the command line.

To count the rows on a filtered list, use ***Count rows on (filtered) list*** from the ***Filter*** action bar choice, or enter FILTER NUM in the command line. An informational message displays the number of rows in the current list. If this list is filtered, only the rows matching the underlying filter criteria are counted.

Job statement information used in panels

Some of the HCD tasks, invoked from the dialog, generate batch jobs. These batch jobs use EXEC procedures as shown in Table 2 on page 26.

The first time you use a task that generates an HCD batch job, you must specify a JOB control statement for the job. This statement can contain user-specific information, such as an account number and SYSOUT class. For example:

```
//WASR    JOB (3259,BOX10),'SMITH',NOTIFY=WAS,
//            CLASS=A,REGION=4M,MSGCLASS=F,MSGLEVEL=(1,1)
```

You need to specify the statement only once; it is saved in your user profile and reused for all subsequent HCD batch jobs that you request (in this and following HCD sessions) until you change it. HCD does not validate the JOB statement.

With JCL overwrite statements you can modify the EXEC procedures that are invoked by the job.

Note:

1. A batch job requires a region size large enough to contain the HCD code (4M bytes) as well as the IODF (or two IODFs when you compare two IODFs).
2. A batch job to build an IOCDS must run on the processor on which the IOCDS is to be updated, except for processors configured in a processor cluster.
3. A batch job generated by HCD cannot run when the HCD dialog has exclusive access to the same IODF that the batch job uses. You can release the IODF by changing to another IODF or by ending the HCD session.
4. To use the HCD profile options (e.g. UIM_LIBNAME=*) for a batch job that is started from the dialog, you need to allocate the HCD profile data set to xx.HCDPROF, where xx is the job step name.
5. In a sysplex environment, use the JOBPARM parameter to specify in which system of the sysplex you want the batch job to run. For additional information, see Chapter 13, “How to invoke HCD batch utility functions,” on page 289.

Table 2 on page 26 lists the HCD tasks that use batch jobs. It also lists their job step names, and EXEC procedure names.

Chapter 6. How to define, modify, or view a configuration

Overview

This information unit describes:

- The possibilities for creating new objects
- The navigation methods through HCD
- A suggested sequence to define a configuration
- Step-by-Step instructions on how to work with (for example, define, change, prime, delete):
  - Operating system configurations
  - EDTs
  - Generics
  - Esoteric groups
  - Processors
  - Channel subsystems (for XMP processors only)
  - Partitions
  - PCIe functions
  - Channel paths
  - Control units
  - Devices
  - Consoles
- The possibilities to view information about objects

The information on how to work with switches is described in Chapter 7, “How to work with switches,” on page 143.

Before using the dialog of HCD to define a hardware configuration, you should have a plan of what your configuration should look like, and what you have to do to accomplish that. Preferably, the requirements of your configuration should be established in a configuration plan. Refer to *z/OS HCD Planning* (for a z/OS configuration) and *z/VM CP Planning and Administration* (for a z/VM configuration) for a description of what needs to be considered when this plan is prepared.

Creating new objects

You have three possibilities to create new objects: add, add like, and repeat (copy).

Add

Use the F11=Add key to define a new object. Initially, the entry fields contain (where applicable) default values supplied by HCD.

Add like

Use the ***Add like*** action from the context menu to define a new object that is based on the definition of an existing object. You just have to enter the fields that are different. A field that needs a unique value, such as the object's identifier, is not copied.

© Copyright IBM Corp. 1994, 2022

Repeat (copy)

The action ***Repeat (copy)*** from the context menu is similar to ***Add like***, but the definitions of all related objects are also copied. For example, if you repeat an operating system configuration, HCD also copies the definitions for all EDTs and consoles, and the connections to all I/O devices attached to that operating system. You can repeat parts of a configuration within the same or to another IODF.

This function is useful when you want to consolidate configuration data from several IODFs into one single IODF or to repeat configuration data (for example, esoterics) that is used several times in an IODF.

When copying parts of a configuration, the source data and the target data are merged.

- If the source object does not exist in the target IODF

  The new object is defined using the attributes you specified while copying the object. The objects and connections that are related to the object you want to copy are created with the same attributes as the source objects and connections.
- If the source object already exists in the target IODF

  The attributes of the target object are updated according to the attributes of the source object. If related objects or connections do not yet exist, they are created. If they already exist, their attributes are updated according to the attributes of the source.

Navigating through HCD

HCD offers three methods to navigate to objects:

- Centralized navigation
- Hierarchical navigation
- Graphical navigation

Centralized navigation

Centralized navigation means that you always navigate to objects starting from the Define, Modify, or View Configuration Data panel.

The tasks described in this section use this navigation method.

Hierarchical navigation

Hierarchical navigation means that you navigate to objects from top to bottom.

In Figure 42 on page 68 you start, for example, with option 3 to open the Processor List. From the Processor List, you can navigate to channel paths, from channel paths to control units, and finally from the control unit list to the device list. This device list - called Device List (attached) in Figure 42 on page 68- is different from the device list you reach with option 5 from the Define, Modify, or View Configuration panel:

- The devices on this list are limited to the control unit you selected on the preceding control unit list.
- The actions offered on this list differ from the actions available on the device list reached with option 5 from the Define, Modify, or View Configuration panel.

Hierarchical navigation is useful, for example, when you want to use the ***Attribute group change*** action necessary to change the DYNAMIC parameter for a group of devices. In this case, you have to navigate to the device list via the operating system configuration list.

Graphical navigation

Graphical navigation means that you navigate to objects by viewing a graphical configuration report and jumping to the object lists using the F4=Jump function. Refer to “Create or view graphical configuration reports” on page 220 for information on how to use the graphical configuration report.

The graphical navigation is useful when you prefer a graphical representation of your configuration to navigate from object to object.

Navigation map

Figure 42 on page 68 illustrates how you can navigate from object to object. You can either navigate to objects using the ***Work with object*** actions from the context menu or using the appropriate action code, for example s. Note that you can reach the Generic List with two action codes: g (ordered by name) or p (ordered by preference value). For information on how to use action codes refer to "Using the action code" on page 53.

Control Unit list and Device list

You reach these lists with option 4 and 5 from the Define, Modify, or View Configuration Data panel. These lists show all devices defined in the IODF.

The Control Unit list (attached) and the Device list (attached) can only be reached from an object higher in the hierarchy. These lists are limited to the object higher in the hierarchy and the actions available on these lists differ from the actions available on the device and control unit lists you reach with option 4 and 5 from the Define, Modify, or View Configuration panel (refer to "Hierarchical navigation" on page 66). You can, for example, limit a control unit list to the control units attached to one specific channel path by opening the list from the channel path list.

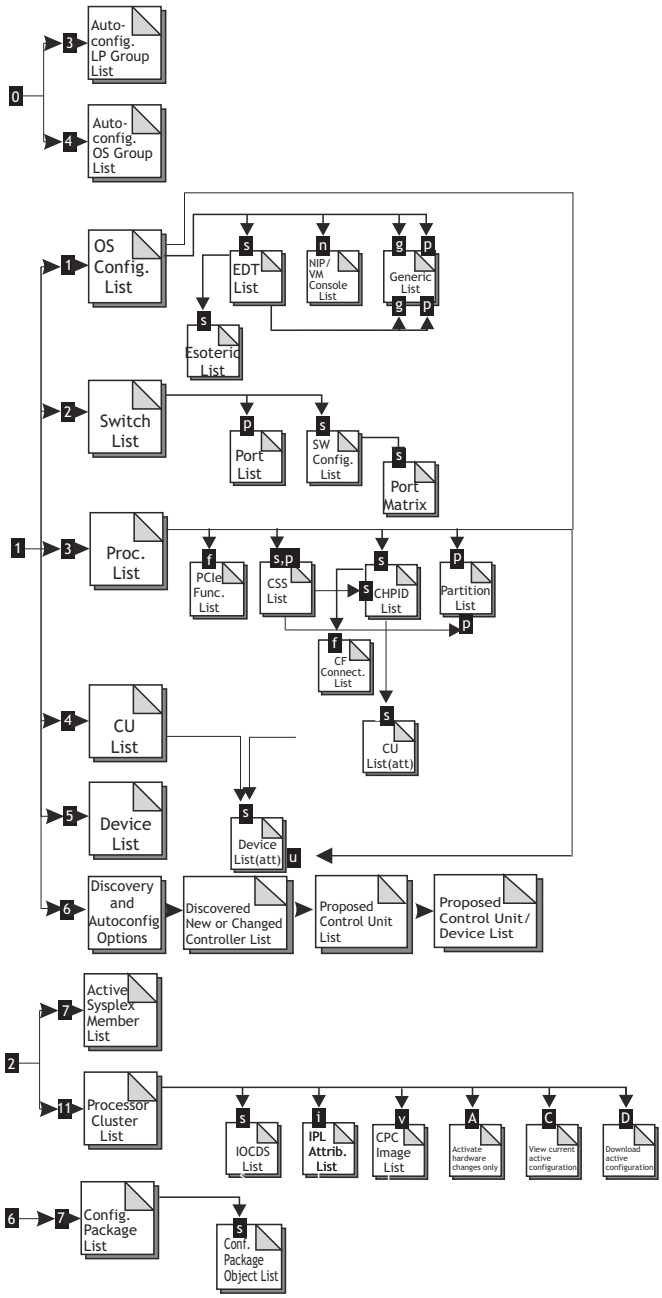

Figure 42. Navigation map

Suggested sequence to define a configuration

A hardware configuration consists of:

- Information needed by z/OS and by z/VM. This is known as the *operating system configuration* or *OS configuration*.
- Information needed by the channel subsystem (CSS). This defines all the hardware resources (such as control units, channel paths, and I/O devices) and how they are connected.
- In some cases, your configuration contains information needed by the switch. For definitions and modifications of switches, refer to Chapter 7, “How to work with switches,” on page 143.

You can define the objects of a configuration in almost any order but at one point you have to connect objects together. You can only connect objects that are already defined; therefore it is useful to define the objects in a logical order. For example, when defining I/O devices during the hardware definition, you

are prompted to add devices to existing operating system definitions. Therefore, it is useful to define the operating system before the devices.

The suggested sequence to define a configuration is:

1. Operating systems
2. EDTs (MVS-type only)
3. Esoterics (MVS-type only)
4. Switches (explained in Chapter 7, “How to work with switches,” on page 143)
5. Processors
6. Channel subsystems (for XMP processors)
7. Partitions (if processor in LPAR mode)
8. PCIe functions
9. Channel paths
10. Control units
11. Devices
12. Consoles

Working with operating system configurations

An operating system (OS) configuration defines the data that is used by z/OS or z/VM to build its control blocks. An IODF can contain more than one OS configuration; z/OS is told which one to use at IPL time.

Defining operating system configurations

It is recommended to define the operating system configuration before you define anything else. Proceed as follows to define an operating system configuration:

1. On the ***Primary Task Selection*** panel, select ***Define, modify, or view configuration data*** and on the resulting panel the object ***Operating system configurations***. HCD displays the Operating System Configuration List of all operating system configurations currently defined in the IODF:

```
 Goto  Backup  Query  Help
------------------------------------------------------------------------------
                    Operating System Configuration List              Row 1 of 8
Command ===> ___________________________________________ Scroll ===> CSR

Select one or more operating system configurations, then press Enter. To
add, use F11.

/ Config. ID  Type     Gen  Description                      D/R site OS ID
_ DRMVSA      MVS      Yes  generated from MVSA
_ DRMVSB      MVS      Yes  generated from MVSB
_ DRMVSC      MVS      Yes  generated from MVSC
_ DRMVSE      MVS      Yes  generated from MVSE
_ MVSA        MVS           ________________________________ DRMVSA
_ MVSB        MVS           ________________________________ DRMVSB
_ MVSC        MVS           ________________________________ DRMVSC
_ MVSE        MVS           ________________________________ DRMVSE
****************************** Bottom of data ******************************
```

Figure 43. Operating System Configuration List

If there are no existing configurations in the IODF, the operating system configuration list is empty.

2. Use F11=Add to define a new configuration. The data-entry fields are shown in the following figure, with sample data:

```
                 Add Operating System Configuration

   Specify or revise the following values.

   OS configuration ID  . . . . . MVSD____
   Operating system type  . . . . MVS       +

   Description  . . . . . . . . . z/OS operating system

   OS config ID for D/R site  . . DRMVSD__  (generated for GDPS)
```

Figure 44. Add Operating System Configuration

3. After you press the Enter key, HCD displays the updated ***Operating System Configuration List***.

D/R site OS configurations

You can optionally type the name of a disaster recovery (D/R) site operating system configuration into the ***OS config ID for D/R site*** field. You need a D/R site OS configuration in a GDPS® managed environment, where storage devices are mirrored over peer-to-peer remote copy (PPRC) connections in order to have a backup system defined for an emergency situation.

During the *Build production I/O definition file* or *Build validated work I/O definition file* tasks, the named D/R site OS configuration is automatically created as copy of the primary OS configuration. The resulting OS configuration is called ***generated*** OS configuration. It has all DUPLEX defined storage devices, that are classified by PPRC usage type DUPLEX, attached with reversed OFFLINE parameter value. That is, if the primary OS configuration specifies OFFLINE=NO, the D/R site OS configuration attaches the devices with OFFLINE=YES and vice versa.

Following rules apply to ***generated*** D/R site OS configurations:

- A ***generated*** OS configuration is re-created with every *Build production I/O definition file* or *Build validated work I/O definition file* from its primary OS configuration.
- With any kind of changes done to a D/R site OS configuration, (for example, modifying device-to-operating-system-relations, or changing EDT definitions), it loses its ***generated*** status. It is not automatically re-created with the next *Build production IODF*, so that the user modifications are preserved. To let it generate again from the primary site OS configuration, you must delete the modified D/R site OS first or specify profile option `UNCOND_GENERATE_DROS=YES`.

  However, changing the description of a D/R site OS configuration does not change its ***generated*** status.
- You cannot specify the name of a D/R site OS configuration for a ***generated*** OS configuration.

The ***generated*** status of an OS configuration is shown in column ***Gen*** in the ***Operating System Configuration List*** (Figure 43 on page 69).

Changing operating system configurations

You can change the description of an operating system by just typing over the `Description` column or by using the ***Change*** action from the context menu (or action code **c**) on the Operating System Configuration List.

Changing the operating system configuration ID

To change the ID of an operating system, perform the following steps:

1. On the OS Configuration List select the operating system and the ***Repeat (copy) OS configurations*** action from the context menu (or action code **r**). The Identify Target IODF panel is displayed.
2. Press the Enter key to accept the default target IODF name, that is the IODF you are currently working with. The Repeat Operating System Configuration panel is displayed.

```
                Repeat Operating System Configuration


 Specify or revise the following values.

 OS configuration ID  . . . . . ________
 Operating system type  . . . : MVS

 Description  . . . . . . . . . z/OS operating system
```

3. Specify the new identifier for the operating system and press the Enter key.

   HCD displays the OS Configuration List now showing the new operating system.
4. Delete the old operating system by selecting the operating system and the ***Delete*** action from the context menu (or action code d). HCD displays a confirmation panel before showing the updated OS Configuration List.

Repeating (copying) operating system configurations

You can copy operating systems within the same or to another IODF. When copying an operating system, the following related objects and connections are also copied:

- Devices defined for the operating system
- List of consoles (NIPCONs for MVS)
- EDTs including their esoterics and generic groups

In the following example, you copy an operating system to another IODF that already contains an operating system with the same ID that you specify in the repeat panel.

1. Make sure that the operating system in the target IODF has the same operating system type as the one in the source IODF.
2. On the Operating System Configuration List, copy the operating system using the ***Repeat (copy) OS configurations*** action from the context menu (or action code r). The Identify Target IODF panel is displayed.
3. Specify the IODF to which the selected operating system is to be copied. The default IODF is the IODF you are currently working with.
4. On the following Repeat Operating System Configuration panel, specify the required values and press the Enter key.

   If a device defined to the operating system already exists in the target IODF, HCD tries to map the device. If more than one device with the same type and number exist, HCD maps the device to the first device found. To avoid this sometimes erroneous mapping, specify a processor and partition on the Repeat Operating System Configuration panel in which the operating system is to be run. Refer to "Migrating additional MVSCP or HCPRIO input data sets" on page 244 for detailed rules when a device is mapped.

   Console devices (NIPCONs for MVS) from the source operating system are copied to the beginning of the target's console chain.
5. Because you copy an operating system that already exists in the target IODF, HCD displays a panel to confirm the merging of configuration data.

Deleting operating system configurations

You can delete the complete definition of an operating system using the ***Delete*** action from the context menu (or action code d) on the Operating System Configuration List. This also deletes all EDTs, esoterics, consoles, and connections to devices defined for this operating system.

Working with EDTs

For an MVS-type operating system, you have to define at least one eligible device table (EDT). An EDT can consist of one or more esoteric device groups and names of the generic device types. Esoteric device groups are installation-defined groupings of I/O devices.

An OS configuration can contain more than one EDT; z/OS is told which one to use at IPL time. For background information about I/O device allocation in z/OS that you need to know when defining EDTs and esoteric groups, refer to *z/OS HCD Planning*.

Defining EDTs

Before you can define EDTs, you must have defined an operating system. You define an EDT as follows:

1. On the ***Primary Task Selection*** panel, select ***Define, modify, or view configuration data*** and on the resulting panel the object ***Operating system configurations***. HCD displays the Operating System Configuration List of all operating system configurations currently defined in the IODF.
2. On the Operating System Configuration List, select the OS configuration and the ***Work with EDTs*** action from the context menu (or action code **S**). HCD displays the EDT List.

```
                                 EDT List
  Goto  Backup  Query  Help
------------------------------------------------------------------------
                                                              Row 1 of 1
Command ===> ______________________________________ Scroll ===> PAGE

Select one or more EDTs, then press Enter. To add, use F11.

Configuration ID . : OPSYS01      MVS or z/OS operating system

/ EDT Last Update By       Description
_ AS  1994-10-04  DOCU     basic
************************** BOTTOM OF DATA ****************************
```

Figure 45. EDT List

If there are no EDTs defined in the IODF, the EDT list is empty.

3. Use F11=Add to add a new EDT. The data-entry fields are shown in the following figure, with sample data:

```
                    Add EDT

    Specify the following values.

    Configuration ID . : OPSYS01      MVS or z/OS operating system

    EDT identifier . . . A1
    Description  . . . . special
```

Figure 46. Add EDT

4. After you press the Enter key HCD displays the updated EDT List.

Changing EDTs

You can change the description of an EDT by just typing over the `Description` column or using the ***Change*** action from the context menu (or action code **C**) on the EDT List.

Changing the EDT ID

To change the ID of an EDT, perform the following steps:

1. On the EDT List select the EDT and the ***Repeat (copy) EDTs*** action from the context menu (or action code **r**). The Identify Target IODF panel is displayed.
2. Press the Enter key to accept the default target IODF name, that is the IODF you are currently working with. The Repeat EDT panel is displayed.

```
                      Repeat EDT


 Specify or revise the following values.

 Configuration ID . . OPSYS01   +

 EDT identifier . . . __
 Description  . . . . special
```

3. Specify the new identifier for the EDT and press the Enter key. HCD displays the EDT List now showing the new EDT.
4. Delete the old EDT by selecting the EDT and the ***Delete*** action from the context menu (or action code **d**). HCD displays a confirmation panel before showing the updated EDT List.

Repeating (copying) EDTs

You can copy EDTs within the same or to another IODF. When copying an EDT, the esoteric groups and the VIO eligible parameter are also copied. Perform the following steps to repeat an EDT:

1. Make sure that the devices are already defined to the target operating system.
2. On the EDT List, select an EDT and the ***Repeat (copy) EDTs*** action from the context menu (or action code **r**). The Identify Target IODF panel is displayed.
3. Specify the IODF to which the selected operating system is to be copied. The default IODF is the IODF you are currently working with.
4. On the following Repeat EDT panel, specify the required values and press the Enter key.

   If the EDT already exists in the target IODF, the esoteric groups and their devices are merged. In this case, HCD displays a panel to confirm the merging of data.

Deleting EDTs

You can delete the definition of an EDT using the ***Delete*** action from the context menu (or action code **d**) on the EDT List. This also deletes the esoterics.

Working with generics

Device types with similar characteristics are logically grouped together and assigned a name to by the system. Such a group is called a generic device type. Reference to a generic device type is made by its name. To request a device allocation, a user can specify a generic device type rather than a specific device number. z/OS then allocates a device from the specified generic device type.

1. On the ***Primary Task Selection*** panel, select ***Define, modify, or view configuration data*** and on the resulting panel the object ***Operating system configurations***. HCD displays the OS Configuration List of all operating system configurations currently defined in the IODF.
2. On the Operating System Configuration List, select the OS configuration and the ***Work with EDTs*** action from the context menu (or action code **s**). HCD displays the EDT List.
3. To change the generics, select either the action ***Work with generics by name*** from the context menu (or action code **g**), or the action ***Work with generics by preference value*** (or action code **p**) on the EDT List. On the resulting panels you can then change the VIO indicator, the preference value for a generic, and you can display a subsequent panel that lists the devices belonging to the specific generic.

Working with esoteric groups

An esoteric device group identifies the I/O devices that are included in that group. The name you assign to an esoteric device group is called the esoteric name. To request allocation of a device from an esoteric device group, specify the esoteric name on the UNIT parameter of a JCL DD statement. The name *esoteric device group* is often shortened to *esoteric group* or simply *esoteric*.

Defining esoteric groups

You can define which esoteric device groups are in each EDT after you have defined the OS configuration. But you cannot assign I/O devices to an esoteric device group until the devices have been defined.

1. On the ***Primary Task Selection*** panel, select ***Define, modify, or view configuration data*** and on the resulting panel the object ***Operating system configurations***. HCD displays the OS Configuration List of all operating system configurations currently defined in the IODF.
2. On the Operating System Configuration List, select the OS configuration and the ***Work with EDTs*** action from the context menu (or action code **S**). HCD displays the EDT List.
3. On the EDT List, select the EDT and the ***Work with esoterics*** action from the context menu (or action code **S**). HCD displays the Esoteric List.

```
  Goto  Filter  Backup  Query  Help
------------------------------------------------------------------------
                                                                Row 1 of 1

Select one or more esoterics, then press Enter. To add, use F11.

Configuration ID . : OPSYS01      MVS or z/OS operating system
EDT identifier . . : AS           basic

/ Esoteric  VIO    Token  State
_ ES001     No     ____   No device defined
**************************** BOTTOM OF DATA ****************************
```

Figure 47. Work with esoterics

4. Use F11=Add to add a new esoteric group. The data-entry fields are shown subsequently, with sample data:

```
             Add Esoteric


Specify the following values.

Esoteric name  . . . ES002___
VIO eligible . . . . No     (Yes or No)
Token  . . . . . . . ____
```

Figure 48. Add Esoteric

5. After you press the Enter key HCD displays the updated Esoteric List.

Assigning devices to esoterics

You must define the I/O devices before you can assign them to an esoteric group. This is described in "Defining devices" on page 118. The `State` column on the Esoteric List indicates the esoteric groups that have no devices defined; so you can check later that your groups are properly defined.

If I/O devices are already defined, you can assign them to esoteric groups as described in "Adding devices to esoterics" on page 75.

Changing esoteric groups

You can change the following data of an esoteric group by just typing over the corresponding columns or by using the ***Change*** action from the context menu (or action code **C**) on the Esoteric List:

- Esoteric name
- VIO eligible parameter
- Token

Adding devices to esoterics

You have two possibilities to add devices to esoterics:

While defining devices

When you define a device, HCD automatically prompts you to define the device to an operating system, then to an EDT and esoterics. Refer to "Defining devices" on page 118 for a step-by-step instruction on how to do that.

While modifying esoterics

You can add existing devices to esoterics at any time from the Esoteric List as follows:

1. On the Esoteric List, select the esoteric and the ***Assign devices*** action from the context menu (or action code **s**). HCD displays the Assign/Unassign Devices to Esoterics panel.
2. On the Assign/Unassign Devices to Esoterics panel, overwrite the values in the `Assigned` column to assign (YES) or unassign (NO) devices to the esoterics of the selected row.

   If you do not want to assign a complete group of devices, you can limit the range by specifying a starting number and the number of devices. If you omit the number of devices, 1 is assumed.

```
                 Assign/Unassign Devices to Esoteric
  Goto  Filter  Backup  Query  Help
-------------------------------------------------------------------
                                                          Row 1 of 4

Specify Yes to assign or No to unassign.

Configuration ID . : OPSYS01         MVS or z/OS operating system
EDT.Esoteric . . . : A1.ES001        VIO eligible . : No

                              Generic             Starting  Number of
Devices       Device Type     Name      Assigned  Number    Devices
0001,1        3278-3          3277-2    Yes       ____      ____
0098,1        9033            SWCH      No        ____      ____
00C1,1        3480            3480      No        ____      ____
01D1,8        3390            3390      No        ____      ____
```

   Figure 49. Assign/Unassigned devices to esoteric

3. Press the Enter key to process the changes. Then press the F3=Exit key to return to the Esoteric List.

Repeating (copying) esoteric groups

You can copy esoterics within the same or to another IODF. When copying an esoteric, the list of assigned devices is also copied.

Perform the following steps to repeat esoterics:

1. Make sure that the devices are already defined to the target operating system.
2. On the Esoteric List select an esoteric and the ***Repeat (copy) esoterics*** action from the context menu (or action code **r**). The Identify Target IODF panel is displayed.
3. Specify the IODF to which the selected operating system is to be copied. The default IODF is the IODF you are currently working with.
4. On the following Repeat Esoteric panel, specify the required values and press the Enter key.

   If the esoteric already exists in the target IODF, the devices defined for the esoteric are merged. In this case, HCD displays a panel to confirm the merging.

Deleting esoteric groups

You can delete the definition of an esoteric using the ***Delete*** action from the context menu (or action code d) on the Esoteric List.

Working with processors

A note on terminology:

Throughout this document, the following terms are used:

XMP processors and SMP processors

The term **XMP processors** designates processors that support multiple logical channel subsystems (LCSS). It is used in contrast to the term **SMP processors**, which designates processors of previous generations that support only one channel subsystem.

For XMP processors, the HCD dialog offers methods to explicitly define multiple logical channel subsystems (MCSS). For SMP processors, the single channel subsystem is implicitly defined with the processor.

You can define more than one processor in an IODF and for each defined processor you can configure processor-related data for further use by the CSS.

For processors that are physically partitioned, you must define each physical partition as an individual processor.

Defining processors

Define a processor as follows:

1. On the ***Primary Task Selection*** panel, select ***Define, modify, or view configuration data*** and on the resulting panel the object ***Processor***. HCD displays the Processor List of all processors currently defined in the IODF.

```
  Goto  Filter  Backup  Query  Help
--------------------------------------------------------------------------------
                                Processor List        Row 1 of 3 More:       >
Command ===> ___________________________________________________ Scroll ===> CSR

Select one or more processors, then press Enter. To add, use F11.


/ Proc. ID Type +   Model +  Mode+ Serial-# + Description
_ PROC1    2817     M49      LPAR  __________ z196 first processor
_ PROC2    2817     M32      LPAR  __________ z196 second processor
_ PROC3    2818     M10      LPAR  __________ z114 BC
_ PR2827   2827     H75      LPAR  __________ zEC12 with PCIe functions
****************************** Bottom of data ********************************
```

Figure 50. Define, modify, or view configuration data

2. Use F11=Add to add a new processor. The data-entry fields are shown in the following figure, with sample data:

```
                                Add Processor

 Specify or revise the following values.

 Processor ID . . . . . . . . . . PROC4
 Processor type . . . . . . . . . 2817     +
 Processor model  . . . . . . . . M80      +
 Configuration mode . . . . . . . LPAR     +
 Number of channel subsystems . . 4        +

 Serial number  . . . . . . . . . 1234562817
 Description  . . . . . . . . . . IBM z196 processor

 Specify SNA address only if part of a processor cluster

 Network name . . . . . . . . . . ________ +
 CPC name     . . . . . . . . . . ________ +

 Local system name  . . . . . . . ________
```

Figure 51. Add a processor

On the **Add Processor** panel, you can specify the network name and the CPC name, when the processor is configured in a processor cluster. If you specify a SNA address, refer to "Security-related considerations" on page 321 for specific access authority.

A local system name (eight alphanumeric characters) is used by the CPC to identify itself when establishing a coupling facility connection. You need to specify local system names for both the target and source processors of the coupling facility. If you do not enter a local system name, and a CPC name is given, the local system name defaults to the CPC name.

For SMP processor you must not specify a local system name.

Use `Prompt` on the Add Processor panel for the SNA addresses for those CPCs that are currently configured in the processor cluster.

3. Depending on the processor type/model, there may be more than one support level for the processor type. The support level defines the supported channel path types, and the features. If the processor has several support levels, HCD displays another panel showing a list of available support levels for the processor (in our example, for a processor of type 2964).

```
                           Available Support Levels
                                                   Row 1 of 4 More:       >
 Command ===> ___________________________________________________________

 Select the processor support level which provides the processor
 capabilities you want to use.


   Support Level
   2964 support, ISM, RCE, UID
   2964 support
   2964 support, ISM, RCE
   2964 support, ISM, RCE, UID, CL5
****************************** BOTTOM OF DATA ******************************

  F1=Help        F2=Split       F3=Exit       F7=Backward      F8=Forward
  F9=Swap       F12=Cancel     F20=Right     F22=Command
```

Figure 52. Available support levels

Select the appropriate support level. HCD uses this level when validating the configuration for this processor. It relates to the installed microcode.

Note: On the Available Support Levels panel you can retrieve an explanation of the processor support level. Position the cursor on the support level description and press the F1 key to get an enumeration of functions provided by this support level.

4. After you press the Enter key HCD displays the updated Processor List.

   You can now use the F20=Right key to scroll to the right to see the SNA address, if you have defined one.

Changing processors

You can change the following data of the processor:

- Type
- Model
- Configuration Mode
- Serial Number
- Description
- Network name
- CPC name
- Local system name

1. On the ***Processor List***, select the processor and apply the ***Change*** action from the context menu (or action code **C**). The ***Change Processor Definition*** dialog is displayed.

```
                Change Processor Definition


 Specify or revise the following values.

 Processor ID . . . . . . . . : PROC4
 Support level:
 XMP, 2817 support, SS 2, 32 CIB CF LINKS
 Processor type . . . . . . . . 2817      +
 Processor model  . . . . . . . M80       +
 Configuration mode . . . . . . LPAR      +

 Serial number  . . . . . . . . 1234562817  +
 Description  . . . . . . . . . IBM z196 processor

 Specify SNA address only if part of a processor cluster:

 Network name . . . . . . . . . ________  +
 CPC name . . . . . . . . . . . ________  +

 Local system name  . . . . . . ________
```

Figure 53. Change Processor Definition

2. To change the processor type, or model, overtype the old processor type, or model values, and press the Enter key. To change the support level for the same processor type, move the cursor to the Support level line and press the Enter key. If you have installed a new processor type or model, or a new processor support level, you need to upgrade the processor definition within HCD. HCD selects the proper configuration rules that are dependent on the processor type, and support level, and generates the correct input for the IOCDS download process.

   Note: If the processor change leads to error message CBDA102I, make sure that the new processor type/model supports the same configuration rules as the old processor type, for example, that the same channel path types are supported. Subsequent messages indicate an invalid support level. You first have to update your configuration according to the new processor type/model before you can change the processor.

   Note: In case of different configuration rules HCD might provide defaults or clear conflicting values. Appropriate messages will be displayed.

3. If more than one support level is available for the processor type, the Available Support Levels panel is displayed where you can select the correct support level for your processor.

Note: On the Available Support Levels panel you can retrieve an explanation of the processor support level: Position the cursor on the processor support level description and press the F1 key to get an enumeration of functions provided by this support level.

4. The Update Channel Path Identifiers panel is displayed. This panel shows the old channel path definitions, which you can change according to your new processor configuration.

```
                        Update Channel Path Identifiers
                                                                Row 1 of 24
Command ===> ___________________________________________ Scroll ===> CSR

Specify any changes to the channel path identifiers in the list below.

Processor ID . . . . . . : PROC1
Channel Subsystem ID . . : 0

CHPID  Type  Side  Until CHPID   New CHPID +
24     OSD         __            24
25     OSC         __            25
26     OSM         __            26
27     CFP         __            27
28     CFP         __            28
29     CNC         __            29
2A     FC          __            2A
2B     FC          __            2B
2C     FCP         __            2C
```

Figure 54. Update Channel Path Identifiers

The column New CHPID shows the channel path IDs to which the values of column CHPID are mapped by default.

- You can overtype the values of the column New CHPID. Leave the column Until CHPID blank. Press the Enter key to move the old channel path IDs to the new channel path IDs.
- If you enter a value in the column Until CHPID, you move all defined CHPIDs in the range defined by the channel paths specified in the CHPID and Until CHPID column to the new range that starts with the value in the New CHPID column. If the values for the CHPID column have a 'gap', the 'gap' is also reflected in the New CHPID column range. When you entered a value in the Until CHPID column, press the Enter key. The Update Channel Path Identifiers panel is redisplayed where the new range is resolved in the New CHPID. The Until CHPID column is shown as blank. To process the updates, press the Enter key again.

5. The source and target CHPIDs of a CIB coupling connection are each given the local system name of the processor to which they will connect. This is automatically done by HCD at the moment when the IOCP input file is built. Therefore, you should be aware of the consequences of changing the local system name. Consider, for example, a scenario, where during a processor upgrade, you want to adapt an existing local system name to match with a new CPC name. Then the I/O configuration of the target processor of an existing CIB connection also changes and requires a dynamic activate or a POR (in case of a stand-alone CF CPC) to re-establish the CF links. Therefore, HCD issues the CBDG400I warning message whenever a user changes a processor's local system name.

Note: If the processor upgrade changed the SYSTEM value of the corresponding IOCP configuration, it may not be possible to do an IOCDS download. It is only possible to perform an IOCDS download for specific processor types because IOCP validates the generated IOCP statements according to the configuration rules of the executing processor. See “Supported hardware report” on page 358 for the processor type which allows you to download an IOCDS in preparation for a processor upgrade.

If a processor type change leads to change of the SYSTEM value of the corresponding IOCP configuration, see “Build an IOCDS” on page 179 and “Build processor cluster IOCDSs” on page 181.

Changing the processor ID

To change the ID of a processor, perform the following steps:

1. On the Processor List, select the processor and the ***Repeat (copy) processor configurations*** action from the context menu (or action code **r**). The Identify Target IODF panel is displayed.

2. Press the Enter key to accept the default target IODF name, that is the IODF you are currently working with. The Repeat Processor panel is displayed.

```
                    Repeat Processor


 Specify or revise the following values.

 Processor ID . . . . . . . . . PROC5___

 Processor type . . . . . . . : 2817
 Processor model  . . . . . . : M80
 Configuration mode . . . . . : LPAR

 Serial number  . . . . . . . . 1234562817  +
 Description  . . . . . . . . . IBM z196   processor

 Specify SNA address only if part of a processor cluster:

 Network name . . . . . . . . . ________  +
 CPC name . . . . . . . . . . . ________  +
```

Figure 55. Repeat Processor

3. Specify the new identifier for the processor and press the Enter key. HCD creates a new processor with the same characteristics and connections as the old one.
4. On the resulting Processor List, delete the old processor by selecting the processor and selecting the ***Delete*** action from the context menu (or action code **d**). HCD displays a confirmation panel before showing the updated Processor List.

Repeating (copying) processors

You can copy processors within the same or to another IODF. When copying a processor, the following related objects and connections are also copied:

- Channel subsystems (for XMP processors only)
- Partitions
- Channel paths
- PCIe functions
- Control units
- Devices

When you copy a processor within the same IODF, you create a new processor. When you copy a processor into a different IODF, you can either create a new processor with the ***Repeat (copy) processor configuration*** action, or, with the same action, merge the configuration of the source processor into an existing configuration of the target processor.

Before copying the processor to an existing processor in another IODF (merge the processor configurations), check the following:

1. Make sure that source and target processor have the same type-model and support level.
2. Check the partition usage type if the processor has several partitions.

   You cannot replace a partition that has a different usage type (except if there are no channel paths defined for this partition):

Usage Type in Source IODF	Matching	Usage Type in Target IODF
OS	→	OS
CF	→	CF
CF/OS	→	CF, OS, or CF/OS

   If the partition usage types do not match, change them in the target IODF.

3. If a channel path already exists in the target IODF, make sure that it has the same type.
4. If the target channel path connects to another dynamic switch than the source channel path, disconnect the channel in the target IODF.
5. To replace a shared channel path mode by a dedicated or reconfigurable channel path mode, change the mode or delete the incompatible channel path in the target IODF.
6. If a processor is copied that has a local system name defined, but the CPC name is changed for the copied processor, the local system name is left unchanged. Whenever a local system name has been defined, either explicitly or by default, a change only happens by explicit user action.

Copy a processor as follows:

1. Copy the processor using the ***Repeat (copy) processor configurations*** action from the context menu (or action code **r**) on the Processor List. The Identify Target IODF panel is displayed.
2. Specify the IODF to which the selected processor configuration is to be copied. The default IODF is the IODF you are currently working with.
3. On the following Repeat Processor panel, specify the required values and press the Enter key.

   Definitions for source partitions are merged with the definitions of the target partitions. If a target partition has another partition number than the source partition, HCD keeps the target partition number.

   If control units, devices, CHPIDs, or PCIe functions already exist in the target IODF (same number and type), HCD tries to map them. "Migrating additional IOCP input data sets" on page 242 explains in detail when a device or control unit is mapped. The general rule is, that target definitions are updated from the source definitions.

   See "Explicit device candidate lists" on page 90 on how to handle explicit device candidate lists.

Copying an SMP processor to an XMP channel subsystem

You can copy the configuration of an SMP processor into an XMP channel subsystem within the same or to another IODF. When copying an SMP processor to a CSS, the following related objects and connections are also copied:

- Partitions
- Channel paths
- Control units
- Devices

You can use this function for the following alternative tasks:

1. **alternative "1" on page 81:** merge the source processor with an existing CSS in the target processor
2. **alternative "2" on page 81:** copy the source processor to a new CSS in the target processor

Copy an SMP processor to a channel subsystem as follows:

- On the Processor List, select an SMP processor and the action ***Copy to channel subsystem... (SMP)*** from the context menu (or action code **y**).
- Specify the IODF to which the selected operating system is to be copied. The default IODF is the IODF you are currently working with.
- On the following panel, specify your target processor ID and channel subsystem ID. Make sure that the target processor supports multiple logical channel subsystems.

```
                Copy to Channel Subsystem


 Specify or revise the following values.


 Source processor:
 Processor ID  . . . . . : PROCA0     Processor with single CSS

 Target channel subsystem:
 Processor ID  . . . . . . PROC4___  +
 Channel subsystem ID  . . 0  +
```

Figure 56. Copy to Channel Subsystem

After pressing the Enter key:

- **for alternative "1" on page 81**, you are prompted to confirm or cancel the merging of the source processor into the existing target CSS. A message will inform you about the success of the operation.
- **for alternative "2" on page 81**, on the Add Channel Subsystem panel, you are prompted to define the ID for the new CSS and the maximum number of allowed devices.

```
                    Add Channel Subsystem


  Specify or revise the following values.

  Processor ID . . . . . . : P2964        performance test system

  Channel Subsystem ID . . . 4  +
  Description  . . . . . . . CSS 4 of processor P2964________

  Maximum number of devices
    in subchannel set 0  . . 65280  +
    in subchannel set 1  . . 65535  +
    in subchannel set 2  . . 65535  +
    in subchannel set 3  . . 65535  +
```

Figure 57. Add Channel Subsystem

If, by chance, partition names from the source processor already exist in the target processor, you are prompted to specify new names for those partitions.

Deleting processors

You can delete the definition of a processor using the ***Delete*** action from the context menu (or action code **d**) on the Processor List. If you delete a processor, all channel paths, partitions, and connections to control units and devices for that processor are also deleted; the control units and devices are not deleted.

Working with channel subsystems

Note:

All tasks described in this unit's subsections are only available for XMP processors.

For XMP processors, you may define multiple logical channel subsystems (up to n), identified by a unique 1-digit hexadecimal number (range 0 through n-1). For each channel subsystem you may define its own set of partitions and CHPIDs.

Defining channel subsystems

Define a channel subsystem as follows:

- On the Processor List, select an XMP processor and the action ***Work with channel subsystems . . (XMP)*** from the context menu (or action code s). HCD displays the Channel Subsystem List.

```
   Goto  Backup  Query  Help
 ------------------------------------------------------------------------------
                            Channel Subsystem List    Row 1 of 6 More:       >
Command ===> _____________________________________________ Scroll ===> PAGE

Select one or more channel subsystems, then press Enter.  To add, use F11.

Processor ID . . . : P2964        performance test system

  CSS Devices in SS0    Devices in SS1    Devices in SS2    Devices in SS3
/ ID  Maximum + Actual  Maximum + Actual  Maximum + Actual  Maximum + Actual
_ 0   65280     16825   65535     0       65535     0       65535     0
_ 1   65280     16709   65535     0       65535     0       65535     0
_ 2   65280     14587   65535     0       65535     0       65535     0
_ 3   65280     15239   65535     0       65535     0       65535     0
 ******************************** Bottom of data ********************************
```

Figure 58. Channel Subsystem List

- Use F11=Add to define a new channel subsystem. The data-entry fields are shown in the following figure, with sample data:

```
                      Add Channel Subsystem


 Specify or revise the following values.

 Processor ID . . . . . . : P2964        performance test system

 Channel Subsystem ID . . . 4  +
 Description  . . . . . . . CSS 4 of processor P2964________

 Maximum number of devices
   in subchannel set 0  . . 65280  +
   in subchannel set 1  . . 65535  +
   in subchannel set 2  . . 65535  +
   in subchannel set 3  . . 65535  +
```

Figure 59. Add Channel Subsystem

Define the ID for the new CSS and the maximum number of allowed devices. For z9 EC processors or later, you can specify the maximum number of devices for more than one subchannel set.

Pressing the Enter key brings you back to the Channel Subsystem List.

Starting with IBM System z10® processors, the maximum number of channel subsystems is predefined during creation of this processor.

Repeating (copying) channel subsystems

You can copy channel subsystems within the same or to another IODF:

1. merge the source CSS with an existing target CSS in the same processor
2. copy a source CSS to a new target CSS in the same processor
3. copy a source CSS to another XMP processor

Copy or repeat a channel subsystem as follows:

- On the Processor List, select an XMP processor and the action ***Work with channel subsystems . . (XMP)*** from the context menu (or action code s).
- On the Channel Subsystem List, for the source CSS, select action ***Repeat (Copy) channel subsystem*** from the context menu (or action code r).
- Specify the IODF to which the selected operating system is to be copied. The default IODF is the IODF you are currently working with.

- On the following panel, specify your target processor and CSS ID:

```
          Repeat Channel Subsystem


Specify or revise the following values.

Processor ID . . . . . . PROC4     +
Channel subsystem ID . . 2  +
```

Figure 60. Repeat Channel Subsystem

- Depending on what you want to do, continue as follows:
  - **To merge source and target CSS**, you are prompted for confirmation for merging the source CSS data into the target CSS data. If you confirm, you are prompted to specify new partition names, because the partitions within an XMP processor must be unique:

```
                 Specify New Partition Names
                                                  Row 1 of 2
Command ===> ____________________________________________

The partitions listed have already been defined in the
target processor. Specify new names and press ENTER.

Partition  New Name
LPAR01     ________
LPAR02     ________
********************* Bottom of data **********************
```

Figure 61. Specify New Partition Names

    A message indicates the successful processing.

  - **To copy the source CSS into a new target CSS**, you can specify or revise certain characteristics of the target CSS:

```
                 Add Channel Subsystem


Specify or revise the following values.

Processor ID . . . . . . : P2964        performance test system

Channel Subsystem ID . . . 4  +
Description  . . . . . . . CSS 4 of processor P2964________

Maximum number of devices
  in subchannel set 0  . . 65280  +
  in subchannel set 1  . . 65535  +
  in subchannel set 2  . . 65535  +
  in subchannel set 3  . . 65535  +
```

Figure 62. Add Channel Subsystem

    You are prompted to specify new partition names. Also, a message indicates the successful processing.

  - **To copy a source CSS to another XMP processor**, the processing is identical as copying into a new target CSS. However, specifying new partition names is only necessary if the partition names of the source processor already exist in the target processor.

Note: CHID values are not copied.

Copying/repeating channel subsystems with CTC connections

When copying channel subsystems or partitions within the same IODF, valid CTC connections in the source are not automatically copied and changed in the target configuration. Instead, HCD displays the ***CTC Connection Update List***. This list shows all valid CTC connections of the source configuration that

need an update before being copied to the target. From this list, you can select those connections that you want to copy. For each selected CTC connection, HCD updates the CUADD definition such that the valid CTC connection is moved from the source to the target. For FCTC control units, HCD generates the full-byte CUADD value for target XMP processors, consisting of the concatenation of CSS and MIFID.

```
                      CTC Connection Update List                     Row 1 of 8
Command ===> ___________________________________________________ Scroll ===> PAGE

Target processor ID: P2084
Target CSS ID . . .: 2

Select CTC connections to be moved to target configuration. Then,
press Enter.

  -----------CTC or FC side----------- ---------CNC/FCV or FC side---------
/ Proc.CSSID Part.    Devices  CH CU   Proc.CSSID Part.    Devices  CH CU
_ TREX.0     TCSS0LP2 8004,2   20 8004 P2064M2    FREE2LP2 8000,2   21 8000
_ TREX.0     TCSS0LP2 9000,2   20 9000 RAPTOR     RAPOS4   9004,2   10 9004
_ TREX.0     TCSS0LP2 9002,2   20 9002 RAPTOR     RAPMIX9  9004,2   10 9004
_ TREX.0     TCSS0LP3 8006,2   20 8006 P2064M2    FREE2LP5 8002,2   21 8002
_ TREX.0     TCSS0LP3 9000,2   20 9000 RAPTOR     RAPOS4   9006,2   10 9006
_ TREX.0     TCSS0LP3 9002,2   20 9002 RAPTOR     RAPMIX9  9006,2   10 9006
_ TREX.0     TCSS2LP2 8000,2   21 8000 P2064M0    FREE0LP2 8004,2   20 8004
_ TREX.0     TCSS2LP5 8002,2   21 8002 P2064M0    FREE0LP3 8006,2   20 8006
****************************** BOTTOM OF DATA *******************************
F1=Help F2=Split F3=Exit F5=Reset F7=Backward
F8=Forward F9=Swap F12=Cancel
```

Figure 63. CTC Connection Update List

Copying a channel subsystem to an SMP processor

HCD offers actions to copy a channel subsystem to an SMP processor or merge the CSS to an existing SMP processor configuration. When copying a channel subsystem to an SMP processor, the following related objects and connections are also copied:

- Partitions
- Channel paths
- Control units
- Devices

1. Use action ***Work with channel subsystems . . (XMP)*** (or action code **s**) for an XMP processor which brings you to its Channel Subsystem List.
2. Now you select action ***Copy to processor*** (or action code **y**) for the CSS that you want to copy.
3. The Identify Target IODF panel is displayed. Specify the IODF where the target processor is defined. The default IODF is the IODF you are currently working with. Press the Enter key. The Copy to Processor panel is displayed.

```
                          Copy to Processor


  Specify or revise the following values.


  Source channel subsystem:
  Processor ID  . . . . . . : PROC4      IBM z196 processor
  Channel subsystem ID  . . : 0

  Target processor:
  Processor ID  . . . . . . . SMPP01__  +
```

Figure 64. Copy to Processor

4. Specify your target processor (an SMP processor) and press the Enter key.

Note: If the target processor does not yet exist, HCD invokes the Add Processor dialog. If the target processor already exists, you must confirm that you want to merge the configuration data. Anyway, make sure that the target processor does not support multiple logical channel subsystems.

5. Before returning to the Channel Subsystem List, a message will inform you about the success of the action.

Changing channel subsystems

You can change the following characteristics of a channel subsystem:

- Description
- Maximum number of devices per subchannel set

To perform this task, proceed as follows:

1. On the Processor List, select an XMP processor and the action ***Work with channel subsystems . . (XMP)*** from the context menu (or action code **s**).
2. On the Channel Subsystem List, for the CSS you want to change, select action ***Change*** from the context menu (or action code **c**).
3. The Change Channel Subsystem panel is displayed, where you can specify your changes. Then press the Enter key. This returns you to the Channel Subsystem List.

```
                    Change Channel Subsystem


 Specify or revise the following values.

 Processor ID . . . . . . : P2964        performance test system
 Channel subsystem ID . . : 4

 Description  . . . . . . . CSS 4 of P2964_________________

 Maximum number of devices
   in subchannel set 0  . . 65280  +
   in subchannel set 1  . . 65535  +
   in subchannel set 2  . . 65535  +
   in subchannel set 3  . . 65535  +

  F1=Help   F2=Split  F3=Exit  F4=Prompt  F5=Reset  F9=Swap
  F12=Cancel
```

Figure 65. Change Channel Subsystem

Changing the channel subsystem ID

To change a CSS ID is only possible via the deviation of repeating (copying) the channel subsystem with a new ID and then delete the source CSS. If you cannot repeat the channel subsystem in the same processor, because all available IDs are occupied, and you want to exchange the IDs of two existing CSSs, then you need to copy both CSSs into a different target processor, delete them in the source processor and copy them back to the source processor with the exchanged IDs.

It may be necessary to restore certain definitions afterwards, for example, coupling facility connections get lost during the copy process.

Deleting channel subsystems

You can delete the definition of a channel subsystem using the ***Delete*** action from the context menu (or action code **d**) on the Channel Subsystem List. If you delete a channel subsystem, all channel paths, partitions, and connections to control units and devices for that CSS are also deleted; the control units and devices are not deleted.

Working with partitions

The following section describes how to work with partitions. Note that you can define partitions for a processor regardless of whether it is defined with configuration mode BASIC or LPAR.

Defining partitions

Define partitions as follows:

1. On the ***Primary Task Selection*** panel, select ***Define, modify, or view configuration data*** and on the resulting panel the object ***Processors.*** HCD displays the Processor List of processors currently defined in the IODF.
2. On the Processor List:
   - **for SMP processors**, select the processor and the ***Work with partitions*** action from the context menu (or action code **p**).
   - **for XMP processors**, select the processor and the ***Work with channel subsystems . . (XMP)*** action from the context menu (or action code **s**) to display the Channel Subsystem List. From this list, select the appropriate channel subsystem and the ***Work with partitions*** action from the context menu (or action code **p**).

   HCD displays the Partition List showing the currently defined partitions for the designated processor. For most processor types HCD will populate all possible partitions as reserved partitions, when adding a processor.

   Note: Starting with processor type 3906 (support level H180913) partitions 'B'-'F' in the highest CSS are reserved for internal use (usage type is FW).

```
                        Partition List
  Goto  Backup  Query  Help
------------------------------------------------------------------------
                                                          Row 1 of 15
Command ===> ___________________________________________ Scroll ===>  CSR

Select one or more partitions, then press Enter. To add, use F11.

Processor ID  . . . . : P2964V3   z13 V3 support
Configuration mode  . : LPAR
Channel Subsystem ID  : 0

/ Partition Name   Number Usage + UID  Description
_ LP0A             A      CF/OS   Y    Linux Test
_ LP0B             B      OS      Y    Linux Test BTM
_ LP0C             C      OS      Y    Linux Test
_ LP0D             D      OS      N    Mini-VM  5 Guests
_ LP0E             E      OS      N    Mini-VM 10 Guests
_ LP0F             F      OS      N    Bib-VM  60 Guests + BTM guests
_ LP01             1      OS      N    Linux Test
**************************** Bottom of data ****************************
```

Figure 66. Partition List

3. Use F11=Add to add the partitions. The data-entry fields are shown in the following figure, with sample data:

```
                    Add Partition

 Specify the following values.

 Partition name . . . LP01____
 Partition number . . 1      (same as MIF image ID)
 Partition usage  . . OS     +
 UID uniqueness . . . N      (Y/N)

 Description  . . . . Test partition 01_________________
```

Figure 67. Add Partition

The `partition usage` field marks a partition to be used for coupling facility support, for operating system usage or internal use. The type of partition usage can be either: `CF`, `OS`, `CF/OS` or `FW`.

Specify `CF/OS` if the partition usage will be determined at partition activation. You can then include this partition into the access list of all channel path types. At partition activation those definitions are ignored that are not valid for the actual usage.

The partition UID uniqueness field can be set to 'Y' (the default is 'N') if PCIe UID uniqueness is required for PCIe functions accessed by this partition. PCIe UID uniqueness checking is done during build production IODF.

Partition 'B' in the highest CSS is an internally used firmware partition (also called Licensed Machine Code or LMC partition). It has to be defined with partition name 'MCS_1' and partition type 'FW'.

4. Press the Enter key. HCD displays the updated Partition List, if you have not yet defined any channel paths.

   If you have already defined channel paths, HCD displays the Update CHPID Access and Candidate Lists panel, where you can include the partition in the access or candidate list of a channel path. For an explanation of access and candidate list, refer to "Defining channel paths" on page 97.

   After pressing the Enter key HCD displays the Update Device Candidate Lists panel, if the new partition is given access to a channel path that attaches devices with an explicit device candidate list. Use this panel to add the new partition to the device candidate list of the listed devices.

   Note: Depending on the defined processor type there might exist one or more partitions which can not be used/changed because they are reserved for internal use.

Defining reserved partitions

For XMP processors, HCD provides the capability to add or remove logical partitions via dynamic I/O configuration. In an IODF used to create your initial IOCDS for power-on reset (POR), you can define reserved partitions, which you plan to add dynamically at a later point in time. In the ***Add Partition*** dialog (see step "3" on page 87 from the previous list), you specify an '*' as the placeholder partition name for reserved partitions. Reserved partitions will appear with this '*' at the end of the Partition List. Furthermore, you specify a partition number, a usage type and optionally a description.

Reserved partitions do not appear in the access or candidate lists of channel paths or devices.

To activate a partition dynamically, you need to change the '*' name to a valid partition name and to define the appropriate partition configuration before building a new production IODF.

Note: You cannot change the partition number dynamically.

Changing partitions

You can change the following data of a partition using the ***Change*** action from the context menu (or action code **C**) on the Partition List. On the resulting Change Partition panel, you can change:

- Name
- Number
- Usage
- UID uniqueness
- Description

If there are already channel paths attached to the partition, HCD displays the channel path access and candidate lists after pressing the Enter key on the Change Partition panel. On these lists, you can update the channel path access of the partition.

For internal partition 'B' in the highest CSS a slightly modified panel appears on which you can only change the partition name from 'MCS_1' to '*' or vice versa and the partition description.

Notes:

- You can also change these partition definitions (except the name) by simply typing over the appropriate columns on the Partition List.
- To dynamically change the "UID uniqueness" attribute of a partition, the partition cannot be active.

Changing partition names dynamically

To dynamically change a partition name, you have to perform two steps:

1. Disconnect all channel paths and devices from the partition and change the partition name to * (see "Defining reserved partitions" on page 88). Activate this intermediate IODF. (This is the only required step if you want to keep this partition as a reserved partition).
2. Now you can change the * partition name to a new valid name, reconnect the wanted channel paths and devices and activate the new configuration.

Repeating (copying) partitions

You can copy partitions within the same or to another IODF. When copying a partition, the following related objects and connections are also copied:

- Channel paths having the partition in their access list
- Control units reached by the partition
- Devices reached by the partition

Note: CHID values are not copied.

Before copying the partition, perform the same checks as when repeating a processor (see "Repeating (copying) processors" on page 80). Omit step 1 that applies to a processor repetition only.

Then copy a partition as follows:

1. Copy the partition using the ***Repeat (copy) partitions*** action from the context menu (or action code **r**) on the Partition List. The Identify Target IODF panel is displayed.
2. Specify the IODF to which the selected partition is to be copied. The default IODF is the IODF you are currently working with.
3. On the following Repeat Partition panel, specify the required values and press the Enter key.

   Definitions for the source partition are merged with the definitions of the target partition. If the target partition has another partition number than the source partition, HCD keeps the target partition number.

   If control units or devices already exist in the target IODF (same number and type), HCD tries to map them. "Migrating additional IOCP input data sets" on page 242 explains in detail when a device or control unit is mapped. If they are mapped, the attributes of the target control unit or device are kept.

   See "Explicit device candidate lists" on page 90 how to handle device candidate lists.

Note: HCD provides special processing when copying/repeating partitions with CTC connections. For more information refer to "Copying/repeating channel subsystems with CTC connections" on page 84.

Transferring partition configurations

Use this function to transfer control units and devices attached to a channel path from one partition to another within the same IODF.

In contrast to the ***Repeat (copy)*** function, you do not copy the partition and channel paths, but move the attached control units and devices to another partition, possibly in another processor.

Before transferring the data, you must define the target channel path with its partition access and candidate list, dynamic switch ID, entry switch ID and entry port.

The new channel path may have a different type than the source channel path.

1. On the Partition List, select the ***Transfer (move) partition configs*** action from the context menu (or action code **X**).
2. On the ***Identify Target Partition*** panel, specify the target processor and partition.
3. The ***Transfer Partition Configuration*** panel is shown. To transfer all control units and devices reached by the source partition, specify a new CHPID value for every source CHPID. The new CHPID of the target partition must exist.

   The data-entry fields with sample data are shown in the following figure.

```
                  Transfer Partition Configuration
                                                 Row 1 of 8
Specify the new CHPID values.

From:                            To:
Processor ID . . . : PROC1       Processor ID . . . : PROC2
Partition name . . : PROD1       Partition name . . : PROD2

CHPID  Type   Mode               New CHPID +
01     FCP    SPAN               __
02     FCP    SPAN               __
03     FCP    SPAN               __
04     FCP    SPAN               __
20     CNC    SHR                __
21     CNC    SHR                __
25     CNC    DED                __
26     CNC    DED                __
```

   Figure 68. Transfer Partition Configuration

4. After you press the Enter key the Partition List is displayed again.

   The attribute values of the transferred control units and devices remain the same for unit address/range, destination link address, time-out, and STADET. The logical address, protocol, and I/O concurrency level of a control unit remain the same if they are compatible with the target processor and channel path. If they are not compatible, default values are used.

Explicit device candidate lists

If the devices that are affected by the ***Transfer (move) partition configs*** action from the context menu (or action code **X**) have an explicit device candidate list, the result of the transfer action depends on whether or not the device was already connected to the target processor. See Table 4 on page 90 for the different combinations. These combinations also apply to the ***Repeat Partition*** and ***Repeat Processor*** actions.

Table 4. Result of the Transfer (Move) Partition Configs Action

Transfer source partition	**Transfer target partition**			
	Device already connected to target partition			**Device not connected to target partition**
	no cand	**cand +**	**cand -**	
no cand	=	=	cand +	no cand
cand + (partition included)	=	=	cand +	cand +
cand - (partition not included)	cand - (*)	=	=	cand - (*)

Note:

Result of the Transfer Action, Relation of Device to Partition:

=
: no action, target partition remains unchanged

no cand
: no explicit device candidate list exists for partition

cand +
: partition included in explicit device candidate list

cand –
: partition not included in explicit device candidate list

Note: (*) The source partition is not included in the explicit device candidate list. During the transfer, HCD checks whether all partitions of the source processor in the candidate list have the same name on the target processor. If partitions with the same name on the target processor are identified they are added to the device candidate list for the target processor. If no partition with the same name is found for the target processor, no explicit device candidate list is built. Therefore, a partition transfer can result in a loss of candidate lists, if all partition names between source and target processor are different. It is recommended to run a device compare report after the partition has been transferred.

CF channel paths

Connections of CF sender and CF receiver channel paths will not be transferred. You have to connect them again after having transferred the partition.

Deleting partitions

You can delete the definition of a partition using the ***Delete*** action from the context menu (or action code **d**) on the Partition List.

To enhance deleting of partitions, which have a CHPID assigned to only this partition in either the access or candidate list, the ***Confirm Delete Partition*** indicates all such CHPIDs that are exclusively assigned to this partition by flagging them with an '*' (CHPIDs B8 and BA in Figure 69 on page 91). Thus, users can remove the flagged CHPIDs in one step and then delete the partition more efficiently.

```
Confirm Delete Partition
                                                          Row 1 of 2
Command ===> _____________________________________ Scroll ===> CSR

Scroll forward to view the complete list of partitions to be
deleted. Channel paths that are flagged (*) are connected to only
one partition and need to be removed before the partition can be
deleted. Press ENTER to confirm delete request. Press F12 to cancel
delete request.

Processor ID  . . . . : PROC01    Processor type 2094

Partition Name   Connected to CHPIDs
COH1              0D, 0E, 0F, 10, 13, 18, 40, 41, 43, 44, 45,
                  47, B4,*B8,*BA, BC
************************* Bottom of data ***************************




 F1=Help       F2=Split      F3=Exit       F7=Backward   F8=Forward
 F9=Swap      F12=Cancel    F22=Command
```

Figure 69. Confirm Delete Partition

Working with PCIe functions

Starting with processor type 2827, Peripheral Component Interconnect® Express® (PCIe) adapters attached to a system can provide the operating system with a variety of so-called PCIe functions to be exploited by entitled logical partitions (LPARs).

Currently HCD supports:

- ***Remote Direct Memory Access (RDMA) over Converged Ethernet (RoCE and RoCE-2).*** PCIe functions of type RoCE may be assigned to external physical networks by specifying corresponding PNET IDs.
- ***Internal Shared Memory PCIe Adapter (ISM).*** A virtual PCIe adapter for which a virtual channel identifier (VCHID) has to be defined.
- ***Regional Crypto Enablement (RCE).*** This PCIe function type is used for IBM approved vendor crypto adapters.
- ***zEDC-Express.*** For PCIe functions of type zEDC-Express, a virtual function number must be specified.
- ***zHyperLink (HYL).*** These PCIe functions require an additional attribute specifying the port on the adapter.
- ***Non Volatile Memory Express (NVMe).*** A PCIe adapter which provides high bandwidth and low latency access for non-volatile memory.

Note: The support of virtual functions, the allowed range of virtual functions and support of PNETIDs depends on the processor type and support level. HCD offers prompts for virtual functions and ensures that the validation rules are fulfilled.

HCD provides dialogs to define, change, delete, and view PCIe functions, and to control, which LPARs have access to which PCIe functions.

Defining PCIe functions

1. On the ***Primary Task Selection*** panel, select ***Define, modify, or view configuration data*** and on the resulting panel, select ***Processors***. HCD displays the Processor List of defined processors.
2. On the ***Processor List*** panel, select an eligible processor and action ***Work with PCIe functions*** from the context menu (or action code **f**).

   HCD displays the ***PCIe Function List*** showing all PCIe functions defined for the selected processor.

```
                              PCIe Function List     Row 1 of 16 More:       >
Command ===> ______________________________________________ Scroll ===> CSR

Select one or more PCIe functions, then press Enter. To add, use F11.

Processor ID . . . . : P3906



/ FID    CHID+  P+  VF+  Type+         UID   Description
_ 0001   100    _   31   ROCE          F010  roce vf=31 2pnetids
_ 0011   120    _   31   ROCE          F011  roce vf=31 1pnetid
_ 0015   115    1   1    ZHYPERLINK    ____  synch io 15 port 115/1 vf 1
_ 0016   115    1   127  ZHYPERLINK    ____  synch io 16 port 115/1 vf 127
_ 0017   115    2   127  ZHYPERLINK    ____  synch io 17 port 115/2 vf 127
_ 0018   115    2   1    ZHYPERLINK    00A4  synch io 18 port 115/2 vf 1
_ 0019   115    2   2    ZHYPERLINK    00A5  synch io 19 port 115/2 vf 2
_ 0020   7C0    _   1    ISM           ____  ism1
_ 0021   7C0    _   2    ISM           ____  ism2
_ 0030   130    _   ___  RCE           ____  ________________________________
_ 0031   131    _   ___  RCE           ____  ________________________________
_ 0150   150    2   100  ROCE-2        1200  roc2 adapter 150 port 150/2
_ 0151   150    2   101  ROCE-2        1201  roc2 adapter 151 port 150/2
_ 0217   117    2   1    ZHYPERLINK    ____  synch io adapter 217 port 117/2
_ 0218   117    1   1    ZHYPERLINK    ____  synch io adapter 218 port 117/1
_ 0252   250    _   10   ZEDC-EXPRESS  888A  ________________________________
******************************** Bottom of data ********************************
```

Figure 70. PCIe Function List

A PCIe function is defined by a unique identifier, the function ID (*FID*). Each function specifies a function type and a channel identifier *CHID*. Multiple functions may be specified to the same CHID or CHID/port value provided that each of these functions defines a unique virtual function *VF* number. When defining a PCIe function, you may specify a description which is shown in this list.

Use PF20=Right to scroll to the partition assignments for the displayed PCIe functions, one panel for each defined channel subsystem.

```
                              PCIe Function List     Row 1 of 13 More: <
Command ===> ___________________________________________________ Scroll ===> CSR

Select one or more PCIe functions, then press Enter. To add, use F11.
Processor ID . . . . : P3906
1=CO LP01      2=CO LP02      3=CO LP03      4=   *         5=   *
6=   *         7=   *         8=   *         9=   *         A=   *
B=   *         C=   *         D=   *         E=CF CF0E      F=CF CF0F
                          ------- Partitions 0x -------
/ FID    CHID   P   VF    1 2 3 4 5 6 7 8 9 A B C D E F
_ 0001   100    _   31    _ _ _ # # # # # # # # # # a c
_ 0011   120    _   31    _ _ _ # # # # # # # # # # a c
_ 0015   115    1   1     _ a _ # # # # # # # # # # _ c
_ 0016   115    1   127   _ a _ # # # # # # # # # # _ c
_ 0017   115    2   2     _ a _ # # # # # # # # # # _ c
_ 0020   7C0    _   1     _ _ _ # # # # # # # # # # a _
_ 0021   7C0    _   2     _ _ _ # # # # # # # # # # a _
_ 0030   130    _   ___   _ _ a # # # # # # # # # # _ _
_ 0031   131    _   ___   _ _ a # # # # # # # # # # _ _
_ 0150   150    2   100   _ _ _ # # # # # # # # # # a _
_ 0151   150    2   101   _ _ _ # # # # # # # # # # a _
_ 0217   117    2   1     _ _ _ # # # # # # # # # # a _
_ 0252   250    _   10    a _ _ # # # # # # # # # # _ _
******************************** Bottom of data
********************************
```

Figure 71. PCIe Function List

3. Use F11=Add to define a new PCIe function. The data-entry fields are shown in the following figure, with sample data:

```
                  Add PCIe Function


 Specify or revise the following values.

 Processor ID  . . . . : P3906

 Function ID . . . . . . 18
 Type  . . . . . . . . . ZHYPERLINK    +

 Channel ID . . . . . . . . . . . . 115  +
 Port . . . . . . . . . . . . . . .  2   +
 Virtual Function ID . . . . . 1   +
 Number of virtual functions . 2
 UID . . . . . . . . . . . . . . a4__

 Description . . . . . . _______________________________

  F1=Help     F2=Split    F3=Exit     F4=Prompt   F5=Reset    F9=Swap
  F12=Cancel
```

Figure 72. Add PCIe Function

You define a new PCIe function specified by its required function ID, function type and CHID value, a port value and a virtual function number can be specified if allowed for the specified function type as well as a description. After pressing the Enter key, the LPARs can be selected that should be entitled to access the function. If you specified an Add-like action, the data entry fields, except the function ID, and the LPAR connections are preset with the values of the selected source function.

Each PCIe function is identified by a four-digit hexadecimal function ID that is unique within a processor configuration. You must specify a function type and a CHID value which describes the related PCIe adapter card in the assigned slot of the I/O drawer. Multiple PCIe functions may be defined for the same CHID/port by assigning a unique virtual function ID to each of these functions.

HCD also supports overgenned PCIe functions. You define overgenned PCIe functions by providing an asterisk (*) for the CHID value. Overgenned functions are validated like other PCIe functions but they are excluded from the IOCP input statements and from dynamic activation.

You can define multiple PCIe function with identical attributes and increasing virtual function IDs at a time by specifying a value greater than 1 in the 'Number of virtual functions' field.

A UID value can be defined for a PCIe function which will be checked for uniqueness if one or more partitions in the access/candidate list have the UID flag set to yes.

Note: If partitions require uniqueness, but no PCIe UID is specified, the a unique UID is generated by HCD when a production IODF is built.

Depending on the function type, you can assign physical network IDs to a PCIe function. Each physical port of the PCIe adapter can be assigned to a (possibly different) physical network. If you press the Enter key, for a function supporting PNETIDs, HCD displays the ***Add/Modify Physical Network IDs*** window where you can enter a physical network ID (*PNET ID*) for each physical port of the adapter. The sequence of the PNET IDs corresponds to the sequence of the port numbers on the adapter card. All functions of a given CHID must have the same set of PNETIDs. 'Build production' will check if PCIe functions with PNETIDs specified have a corresponding channel path (same PNETID) accessing at least one identical LPAR.

Note: PNETIDs are used by IBM Z. For additional information about the z/OS usage of PNETIDs, refer to the Physical Network Considerations chapter in *z/OS Communications Server: IP Configuration Guide*.

```
                         Add/Modify Physical Network IDs


     If the Channel ID (CHID) is associated to one or more physical networks,
     specify each physical network ID corresponding to each applicable physical port.

     Physical network ID 1  . . PNET01__________
     Physical network ID 2  . . PNET02__________
     Physical network ID 3  . . ________________
     Physical network ID 4  . . ________________


      F1=Help     F2=Split    F3=Exit     F5=Reset    F9=Swap    F12=Cancel
```

Figure 73. Add/Modify Physical Network IDs

If you press the Enter key either on the ***Add/Modify Physical Network IDs*** window for PCIe functions supporting PNETIDs, or directly on the ***Add PCIe*** function window for PCIe functions without PNETID support, HCD displays the ***Define Access List*** window, where you can specify one partition to be connected to the defined PCIe function.

```
                            Define Access List
                                                                  Row 1 of 67
Command ===> ___________________________________________ Scroll ===> PAGE

Select one or more partitions for inclusion in the access list.

Function ID  . . . . : 222

/ CSS ID Partition Name   Number Usage Description
_ 0      LP0A             A      OS    Linux Test
/ 0      LP0B             B      OS    Linux Test BTM
…...
_ 1      LP1A             A      OS    Linux Test
_ 1      LP1B             B      OS    Linux Test BTM
…...
_ 2      LP2A             A      OS    Linux Dev
_ 2      LP2B             B      OS    Linux Dev
….
_ 3      LP3A             A      OS    Midi test systems
_ 3      LP3C             C      OS    z/OS for HCD changes
….
_ 4      LP4D             D      CF/OS
_ 4      LP4E             E      CF/OS
….
_ 5      LP51             1      CF/OS
_ 5      LP52             2      CF/OS
```

Figure 74. Define Access List

Pressing Enter again leads you to the ***Define Candidate List*** window. Here you can modify the candidate list of partitions assigned to the PCIe function. You can define partitions from any channel subsystem.

Changing PCIe functions

You can change the following characteristics of a defined PCIe function:

- type
- CHID
- port
- virtual function number, if supported
- UID
- description
- physical network IDs, if supported
- assigned partition in the access list
- assigned partitions in the candidate list

You can change a PCIe function using the ***Change*** action from the context menu (or action code **c**) on the ***PCIe Function List***.

You can also change the PCIe function definitions and the related access and candidate list by simply tying over the appropriate values in the ***PCIe Function List***. For certain changes of the function type, HCD enforces the specification of a virtual function number.

You have to press the Enter key to process the changes. HCD then validates the data and displays the panel again. The changes are processed sequentially row after row. Changes that require a processing of multiple row changes at once will not be possible.

Deleting PCIe functions

You can delete a PCIe function using the ***Delete*** action from the context menu (or action code **d**) on the ***PCIe Function List***. Before deleting the PCIe function, HCD prompts you for a confirmation.

Working with channel paths

Channel paths can be dedicated, reconfigurable, shared, or spanned. The following list explains when to use which channel path operation mode.

DED
: Dedicated; if you want only one logical partition to access a channel path, specify that channel path as dedicated. You cannot reconfigure a dedicated channel path. This is the default mode.

REC
: Reconfigurable; if you want only one logical partition at a time to access a channel path and you want to be able to reconfigure the channel path from one partition to another, specify that channel path as reconfigurable.

SHR
: Shared; if you want more than one logical partition to access a channel path simultaneously, specify that channel path as shared.

SPAN
: Spanned; if in XMP processors for certain channel types, you want to have a shared channel accessed by partitions from multiple logical channel subsystems, specify that channel path as spanned.

On the Add Channel Path panel, enter a channel path type and use F4=Prompt for the operation mode to find out the allowed operation modes for the specified type.

Channel paths can also be categorized as static or managed. For more information, see "Defining managed channel paths" on page 101.

Using Multiple Image Facility

If a processor complex has Multiple Image Facility (MIF) capability, and is running in LPAR mode, multiple logical partitions can access the same shared channel paths, thereby reducing the number of required physical connections. In contrast, if a processor complex does not have MIF capability, all logical partitions must use separate channel paths to share I/O devices. For more information about LPAR mode and MIF, see the *PR/SM Planning Guide*.

More about spanned channel paths in multiple LCSSs

Depending on the processor type, in the HCD dialog you may define certain channel paths with operation mode SPAN. A spanned CHPID will have partitions belonging to more than one channel subsystem in its access and candidate list.

A spanned channel path will be created with the same CHPID number in all channel subsystems that are using it. For example, you have a processor MCSSPRO1 with channel subsystems 0 through 3, and you create CHPID 1A (type IQD, SPAN) and let it access partitions from CSS 0, 2, and 3. Then CHPID 1A is the same CHPID in CSSs 0, 2, and 3. In CSS 1, you can use CHPID 1A for a different channel path.

Generally speaking, a channel subsystem that is not using a spanned channel can use the CHPID of that spanned channel for a separate channel path definition.

If you define a channel as SPAN, but connect it to partitions from a single channel subsystem only, then HCD displays its operation mode as SHR. The other way round, if a shared channel path is eligible for being spanned, and you enlarge its access or candidate list with partitions from multiple logical channel subsystems, then HCD displays this channel's operation mode as SPAN.

Note:

It is dependent on the processor support level which channel path types can be defined as spanned. Managed channels cannot be defined as spanned.

Defining channel paths

At first, you define a channel path together with its access to logical partitions. Then you may define special channel path characteristics. These possibilities are described in "Defining special channel path characteristics" on page 100.

1. On the HCD entry panel, select the task ***Define, modify, or view configuration data*** and from the resulting panel, select ***Processors***. HCD displays the Processor List of defined processors.
2. On the Processor List:
   - **for SMP processors**, select the processor and the ***Work with attached channel paths (SMP)*** action from the context menu (or action code **S**).
   - **for XMP processors**, select the processor and the ***Work with channel subsystems . . (XMP)*** action from the context menu (or action code **S**) to display the Channel Subsystem List. From this list, select the appropriate channel subsystem and the ***Work with attached channel paths*** action from the context menu (or action code **S**).

   HCD displays the Channel Path List showing all channel paths defined for the selected processor/channel subsystem.

```
  Goto  Filter  Backup  Query  Help
--------------------------------------------------------------------------------
                              Channel Path List       Row 1 of 6 More:       >
Command ===> ______________________________________________ Scroll ===> PAGE

Select one or more channel paths, then press Enter. To add use F11.

Processor ID . . . . : P2964        test system
Configuration mode . : LPAR
Channel Subsystem ID : 4            CSS 4 of P2964

        CHID+             Dyn Entry +
/ CHPID AID/P Type+ Mode+ Sw+ Sw Port Con Mng Description
_ C0    4C0   OSD   SPAN  __  __ __       No  QD80 10Gb DWx
_ C1    4C1   OSD   SPAN  __  __ __       No  QD80 10Gb DWx
_ C2    4C2   OSD   SPAN  __  __ __       No  QD80 10Gb DWx
_ C3    4C3   OSD   SPAN  __  __ __       No  QD80 10Gb DWx
_ F5    7E5   IQD   SPAN  __  __ __       No  IQD 40 kB and external Bridge
_ FA    7E0   IQD   SPAN  __  __ __       No  IQD 16 kB Maximum frame size
```

Figure 75. Channel Path List

   If the Type contains three asterisks (***), the IODF channel path type is unknown to the currently used HCD.

3. Use F11=Add to add channel paths. The data-entry fields are shown in the following panel, with sample data:

```
                  Add Channel Path


 Specify or revise the following values.

 Processor ID . . . . : P2964        test system
 Configuration mode . : LPAR
 Channel subsystem ID : 4            CSS 4 of P2964

 Channel path ID  . . . . C4    +            Channel ID  ___  +
 Number of CHPIDs . . . . 1
 Channel path type . . .  CS5  +
 Operation mode. . . . .  DED  +
 Managed  . . . . . . . . No   (Yes or No)   I/O Cluster ________  +
 Description  . . . . . . ________________________________

 Specify the following values only if connected to a switch:
 Dynamic switch ID  __  + (00 - FF)
 Entry switch ID  . . . . __  +
 Entry port . . . . . . . __  +
  F1=Help     F2=Split    F3=Exit     F4=Prompt   F5=Reset    F9=Swap
 F12=Cancel
```

Figure 76. Add Channel Path

For physical channels on an XMP processor, you have to specify the channel identifier (Channel ID or CHID) belonging to the channel path identifier (CHPID). For internal channel paths a range of virtual CHIDs (promptable in HCD) is reserved. This range is depending on the processor type.

The CHPID Mapping Tool (CMT) can be used to make the mapping between CHPIDs easier (see "How to interact with the CHPID Mapping Tool" on page 189).

4. For each static channel path you can specify which logical partitions can access that channel path. After you press the Enter key on the Add Channel Path panel, HCD displays the Define Access List.

```
                        Define Access List
                                                          Row 1 of 6

 Select one or more partitions for inclusion in the access list.

 Channel subsystem ID : 0      H05LP01 - H05LP15
 Channel path ID  . . : 02     Channel path type  . : FCV
 Operation mode . . . : SHR    Number of CHPIDs . . : 1

 / CSS ID Partition Name   Number Usage Description
 / 0      H05LP01          1      OS
 _ 0      H05LP02          2      OS
 _ 0      H05LP03          3      OS
 _ 0      H05LP04          4      OS
 _ 0      H05LP05          5      OS
 / 0      H05LP06          6      OS
 / 0      H05LP07          7      OS    Mini-OS
 _ 0      H05LP08          8      OS    Automation-OS
 _ 0      H05LP09          9      OS    TEST - OS
 _ 0      H05LP10          A      OS
```

Figure 77. Define Access List

If you are working on ***spanned*** channel paths of an XMP processor, the Define Access List also shows the partitions defined for other channel subsystems:

```
                              Define Access List
                                                                  Row 1 of 1
Command ===> ___________________________________________ Scroll ===> CSR

Select one or more partitions for inclusion in the access list.

Channel subsystem ID : 0      H05LP01 - H05LP15
Channel path ID  . . : 0E     Channel path type  . : OSC
Operation mode . . . : SPAN   Number of CHPIDs . . : 1

/ CSS ID Partition Name   Number Usage Description
_ 0      H05LP01          1      OS
_ 0      H05LP02          2      OS
…
_ 1      H05LP29          E      OS    Many Guest VM
_ 1      H05LP30          F      OS    TEST - VM
_ 2      H05LP31          1      OS
_ 2      H05LP32          2      OS
…
_ 2      TRX2CFA          A      CF/OS CF for TRXPLEX
_ 3      H05LP46          1      OS
_ 3      H05LP47          2      OS

**************************** Bottom of data ****************************
```

Figure 78. Define Access List

If you want a logical partition to access a dedicated, reconfigurable, or shared channel path when you initially activate the logical partition, place that logical partition in the channel path's access list. For shared channel paths and spanned channel paths, you can place more than one partition in the access list.

5. If you do not include all partitions in the access list, you are prompted for the candidate list (for reconfigurable and shared channel paths) after pressing the Enter key.

   From the IOCP point of view, the channel path candidate list includes the channel path access list. From the HCD point of view, the channel path candidate list does not include the channel path access list. The partitions already in the access list do not appear in the candidate list.

```
                              Define Candidate List
CBDPCH1D                                                          Row 1 of 12
Command ===> ___________________________________________ Scroll ===> CSR

Select one or more partitions for inclusion in the candidate list.

Channel subsystem ID : 0      H05LP01 - H05LP15
Channel path ID  . . : 02     Channel path type  . : FCV
Operation mode . . . : SHR    Number of CHPIDs . . : 1

/ CSS ID Partition Name   Number Usage Description
_ 0      H05LP02          2      OS
/ 0      H05LP03          3      OS
/ 0      H05LP04          4      OS
/ 0      H05LP05          5      OS
_ 0      H05LP08          8      OS    Automation-OS
_ 0      H05LP09          9      OS    TEST - OS
_ 0      H05LP10          A      OS
_ 0      H05LP11          B      OS
_ 0      H05LP12          C      OS
_ 0      H05LP13          D      OS    Mini-OS 2
 F1=Help       F2=Split      F3=Exit       F5=Reset      F6=Previous
 F7=Backward   F8=Forward    F9=Swap      F12=Cancel    F22=Command
```

Figure 79. Define Candidate List

If you want to be able to configure a reconfigurable or shared channel path online to a logical partition, place that logical partition in the channel path's candidate list.

6. After pressing the Enter key, you return to the Channel Path List. Scroll to the right to get an overview of the access and candidate list of a channel path. The following matrix is displayed:

```
                              Channel Path List      Row 1 of 78 More: <
Command ===> ___________________________________________________ Scroll ===> CSR

Select one or more channel paths, then press Enter. To add, use F11.

Processor ID : PROC03     CSS ID  : 0   H05LP01 - H05LP15
1=OS H05LP01   2=OS H05LP02   3=OS H05LP03   4=OS H05LP04   5=OS H05LP05
6=OS H05LP06   7=OS H05LP07   8=OS H05LP08   9=OS H05LP09   A=OS H05LP10
B=OS H05LP11   C=OS H05LP12   D=OS H05LP13   E=OS H05LP14   F=OS H05LP15
        CHID+                  I/O Cluster  --------- Partitions 0x -----
/ CHPID AID/P Type+ Mode+ Mng   Name +       1 2 3 4 5 6 7 8 9 A B C D E F
_ 0D    100   OSN   SPAN  No    ________     a a a a a a a a a a a a a a a
_ 10    101   CNC   SHR   No    ________     c _ _ _ _ _ _ _ _ _ _ _ _ _ _
_ 11    108   CNC   SHR   No    ________     c _ _ _ _ _ _ _ _ _ _ _ _ _ _
_ 12    109   CNC   SHR   No    ________     c c c c c c c c c c c c c c a
_ 13    110   CNC   SHR   No    ________     c _ _ _ _ _ _ _ _ _ _ _ _ _ _
_ 14    111   CNC   SHR   No    ________     c _ _ _ _ _ _ _ _ _ _ _ _ _ _
_ 15    170   CNC   SHR   No    ________     _ _ _ _ _ _ _ _ _ a _ _ _ _ _
_ 16    172   CTC   SHR   No    ________     c _ _ _ _ _ _ _ _ _ _ _ _ _ _
…
_ 23    1F0   CNC   SHR   Yes   UTCPLX38     * * * * _ _ _ _ _ _ _ * _ _ _
_ 24    1F1   CNC   SHR   Yes   UTCPLX38     * * * * _ _ _ _ _ _ _ * _ _ _
_ 25    16/1  CIB   SHR   No    ________     a c c c c c c _ _ _ _ _ _ _ _
```

Figure 80. Channel Path/Partition Matrix

The legend, which precedes the partition matrix shows how the partition names are associated with the columns of the partition matrix. The headings ***Partitions 0x***, ***Partitions 1x***, ***Partitions 2x*** and so on, if scrolling to the right, indicate that the partitions for the related channel subsystems (0, 1, 2, ...) are shown. The column numbers correspond to the partition numbers in the pertaining channel subsystem. Also, the partition usage type OS, CF or CO (for CF/OS) is indicated in the legend.

In the previous example, column 1 under Partitions 0x shows the definitions for partition H05LP01 of usage type OS with partition number 1 in CSS 0.

The following entries may appear in the partition matrix:

a
indicates that the partition is in the channel path's access list.

c
indicates that the partition is in the candidate list.

*****
is shown for a managed channel path in all logical partitions that potentially can access that channel path.

#
indicates that the channel path (which is defined to the channel subsystem named in the Channel Subsystem ID field) cannot be attached to the partitions of another channel subsystem. Either a channel path with the same identifier is already defined for the other channel subsystem, or the channel path cannot be spanned or it can be spanned, but the channel path mode is not SPAN or SHR. For information on how to change a CHPID's operation mode to SPAN, if applicable, refer to “Changing the operation mode of a channel path” on page 109.

Defining special channel path characteristics

This section handles the following topics:

- “Defining managed channel paths” on page 101
- “Defining multiple channel paths in one step” on page 101
- “Connecting a channel path to a switch” on page 101
- “Defining IQD channel parameters” on page 101
- “Defining more than 160 TCP/IP stacks” on page 102
- “Defining an OSD channel path to physical networks” on page 103

- “Defining or editing channels using Host Communcation Adapters” on page 103
- “Defining spanned channel paths” on page 104
- “Over-defining a CHPID” on page 104

Defining managed channel paths

You can define a channel path as being managed by Dynamic Channel Path Management (DCM). DCM will use such a channel path to dynamically assign the logical paths to control units in order to optimize I/O activity. A managed channel path must connect to a dynamic switch and may be used for control units that connect to the same switch. If a channel path is defined as managed in an LPAR mode processor, it must be defined as shared. It cannot be connected to logical partitions but must specify an I/O cluster name. An I/O cluster is a sysplex that owns the managed channel path. All systems of the sysplex on the given processor are allowed to share the managed channel path. A managed channel path cannot be connected to a control unit by HCD.

Defining multiple channel paths in one step

You can define, in one step, a group of channel paths of the same type and mode and with consecutive identifiers. It is recommended to define only a group of channel paths that have the same partitions in their access and candidate lists. Otherwise, you have to change the channel paths that have different partitions in their access and candidate list in a further step.

1. Define the group by specifying the first channel path identifier (CHPID) and the number of channel paths in the group. Define a channel path type, mode, and description. HCD applies the definition to all channel paths in the group.
2. Type over the fields that are different, for example description, in the Channel Path List.

Connecting a channel path to a switch

If you have already defined a switch, you can connect the channel path to the switch on the Add Channel Path panel. Specify the dynamic switch ID, the entry switch ID, and the entry port to connect the channel path to a switch.

The values are only valid for the first channel path if you have defined a group of channel paths in one step. To define values for the other channel paths of the group, HCD displays an additional panel. This panel allows you to define the entry ports for all subsequent channel paths of the group. For information on dynamic switch ID and entry switch ID, refer to “Possibilities of switch connections” on page 143.

```
                    Update CHPID Settings
                                         Row 1 of 3

 Specify or revise the following values.

 Processor ID . . . . : PROC1
 Channel Subsystem ID : 0

              DynEntry  --Entry +--
 CHPID  PCHID Switch +  Switch Port
 1C     ___   98        98     C8
 1D     ___   98        98     __
 1E     ___   98        98     __
 **************** BOTTOM OF DATA *****************
```

Figure 81. Update CHPID Settings

Defining IQD channel parameters

For an IQD channel path type, HCD allows you to specify the following parameters:

Maximum frame size
If you define or update an IQD channel path, HCD displays a dialog that allows you to specify a maximum frame size to be used for IQDIO requests on that channel path. For further information refer to *z/OS Communications Server: IP Configuration Guide*.

IQD function

Starting with processor types 2817 and 2818, the Internal Queued Direct I/O (IQDIO) support offers two new options besides the basic HiperSockets functions:

- integration with the intraensemble data network (IEDN) controlled by the zManager functions which provide access controls, virtualization and management functions necessary to secure and manage the IEDN. This functionality is called extended IQD (IQDX).
- bridging an IQD channel to an external (customer managed) network

To support these functions, for IQD channels, HCD offers three choices:

Basic HiperSockets
The IQD channel path is connected to the internal HiperSockets network and is used without connection to the IEDN or an external network. This is the default.

IEDN Access (IQDX)
The IQD channel path supports IEDN via the Internal Queued Direct I/O Extensions (IQDX) function.

External Bridge
The IQD channel path works in basic HiperSockets mode and can be transparently bridged to an external (customer managed) network via the z/VM Virtual Switch bridge support.

Physical network ID

An IQD channel path may be defined to a physical network.

```
                  Specify IQD Channel Parameters


 Specify or revise the values below.

 Maximum frame size in KB . . . . . . 16  +

 IQD function . . . . . . . . . . . . 1   1.  Basic HiperSockets
                                           2.  IEDN Access (IQDX)
                                           3.  External Bridge

 Physical network ID  . . . . . . . . PNET03_________
```

Figure 82. Specify IQD Channel Parameters

Defining more than 160 TCP/IP stacks

When defining or changing channel paths of type OSD, OSM, or OSX for processors with the corresponding support level, HCD prompts you with a dialog whether you want to allow for more than 160 TCP/IP stacks with this channel. This is done by disabling priority queuing. If priority queuing is disabled, the channel can support four times as many queues (4 * 480 = 1920 subchannels) corresponding to four times as many TCP/IP stacks (4 * 160 = 640) as with enabled queue prioritization.

OSM channels require that more than 160 TCP/IP stacks are allowed.

```
               Allow for more than 160 TCP/IP stacks


 Specify Yes to allow more than 160 TCP/IP stacks,
 otherwise specify No. Specifying Yes will cause priority
 queuing to be disabled.

 Will greater than 160 TCP/IP stacks
 be required for this channel?  . . . No

  F1=Help     F2=Split    F3=Exit     F5=Reset    F9=Swap
 F12=Cancel
```

Figure 83. Allow for more than 160 TCP/IP stacks

Defining an OSD channel path to physical networks

When defining or changing channel paths of type OSD for processors with the corresponding support level, HCD prompts you with a dialog to add or modify physical network IDs. Up to four physical network IDs *PNET IDs* may be specified for customer networks. The PNET IDs have to be specified in the sequence of the physical port on the OSA channel adapter card. That means, Physical network ID 1 has to specify the ID of the physical network that is used for the first physical port of the channel adapter card, Physical network ID 2 has to specify the ID of the physical network that is used for the second physical port, and so on. This dialog is not shown for channel path types OSX and OSM, since these channel path types belong to the internal physical network IEDN.

Defining or editing channels using Host Communcation Adapters

When defining or changing a channel using HCA (e.g. CIB or CS5 channel paths), HCD prompts you with a dialog which asks for the specification of the ***Adapter ID*** of the HCA and the ***Port*** on the HCA of that channel path.

```
           Specify HCA Attributes


 Specify or revise the values below.

 Adapter ID of the HCA  . . __  +
 Port on the HCA  . . . . . _   +


  F1=Help     F2=Split    F3=Exit     F4=Prompt   F5=Reset
  F9=Swap    F12=Cancel
```

Figure 84. Specify HCA Attributes

Defining or editing channels using a PCHID and a port

When defining or changing a channel using a PCHID with a port (for example: CL5 channel), HCD prompts you with a dialog that asks for the specification of the PCHID and the port on the adapter for that channel.

```
     Specify Coupling Pchid/Port Attributes


 Specify or revise the values below.

 Physical channel ID  . . . 010
 Coupling port  . . . . . . 1   +
```

Figure 85. Specify Coupling PCHID/Port Attributes

Defining or editing channels using a HCA Port and a PCHID

When defining or changing a channel using a HCA port with a PCHID (for example: CL5 channel paths), HCD prompts you with a dialog that asks for the specification of the PCHID and the Port on the HCA for that channel path.

```
             Specify Coupling Pchid/Port Attribute

  Specify or revise the values below.

  Physical channel ID  . . . 010
  Coupling port  . . . . . . 1   +
```

Defining spanned channel paths

You can define a suitable channel path as ***spanned*** directly when creating it. On the Add Channel Path panel from Figure 76 on page 98, specify

```
Operation mode . . . . . SPAN
```

After pressing the Enter key, HCD displays the combination of the Define Access List and the Define Candidate List, offering partitions from multiple logical channel subsystems. Note that if you, nevertheless, in both lists select only partitions from the current CSS, then the operation mode of the channel path is set back to SHR.

For information on how to change a CHPID's operation mode to SPAN, if applicable, refer to “Changing the operation mode of a channel path” on page 109.

Over-defining a CHPID

For an XMP processor, you can define a channel path that is not physically installed on the machine. This may be useful if you want to migrate from a machine with more channels defined than the target XMP processor has currently installed, or if you want to prepare a configuration for future upgrades of the channel cards.

You can also over-define CF channel paths (for example: CIB, CS5, or CL5) for your OS partition. This avoids an outage for the definition of new CF connections between an OS partition and a stand-alone coupling facility CPC.

To distinguish an over-defined CHPID from a physically installed CHPID, use character `*` for the CHID value or the HCA ID when over-defining the CHPID. An over-defined CHPID must adhere to all validation rules.

When installing the channel path later, you must edit the CHPID and replace the `*` by its valid CHID or HCA ID.

Over-defined channel paths are not taken into account by an IOCDS download, by an IOCP build and by a dynamic activation of an I/O configuration. If a control unit contains only CHPIDs with a CHID value or HCA ID `*`, the whole control unit (including any attached devices) is omitted from the configuration.

If a CHPID changes its CHID or HCA ID from `*` to a valid value during a dynamic activation, an `CHPID` request is generated. Correspondingly, if the PCHID or HCA ID is changed from a valid value to an `*`, a `Delete CHPID` request is generated.

When building a CONFIGxx member, CHPIDs with a CHID/HCA ID `*` are skipped. Attached control units including attached devices are also omitted.

When copying a configuration or generating I/O configuration statements, channel path definitions with CHID=*, CHID, and AID=* are included.

When building a production IODF, HCD requires that the CF channels are connected, even if they are over-defined. If the connection is within the same processor, a mix of over-defined and fully-defined HCA IDs is not accepted. In this case, error message CBDG541I is issued and the production IODF is not built.

Establishing coupling facility channel path connections

Before you start to establish a Coupling Facility (CF) channel path connection, you must have defined a processor that supports coupling facilities, a coupling facility partition, a coupling facility receiver (CF receiver) channel path and coupling facility sender (CF sender) channel path, or peer channel paths.

1. On the Channel Path List (Figure 80 on page 100) select a channel path and the ***Connect CF channel path*** action from the context menu (or type action code **f**). HCD displays the ***CF Channel Path Connectivity List*** showing all CF channel paths defined for a processor.

   To show that a CHPID is already connected in another IODF you can set the indicator in the `Occ` (occupied) column to Y (yes). You cannot connect a CHPID labeled Y. However, you can change the occupied status by overwriting.

```
                     CF Channel Path Connectivity List              Row 1 of 6
Command ===> ___________________________________________ Scroll ===> CSR

Select one or more channel paths, then press Enter.

Source processor ID . . . . . : P2964V5   z13 V5 support
Source channel subsystem ID . : 4         CSS 4 of P2964
Source partition name . . . . : *

  ----------Source----------   -----------Destination-----------   -CU-  -#-
/ CHP CHID  CF Type Mode Occ   Proc.CSSID CHP CHID  CF Type Mode   Type  Dev
_ 10  010/1 Y  CL5  SPAN N     P2964V5.5  11  011/2 Y  CL5  SPAN   CFP   32
_ 11  011/2 Y  CL5  SPAN N     P2964V5.4  10  010/1 Y  CL5  SPAN   CFP   32
_ 12  011/2 Y  CL5  SPAN N     P2964V5.5  13  011/2 Y  CL5  SPAN   CFP   32
_ 13  011/2 Y  CL5  SPAN N     P2964V5.4  12  011/2 Y  CL5  SPAN   CFP   32
_ 22  30/2  Y  CS5  SPAN N     P2964V3.0  20  30/2  N  CS5  SHR    CFP   8
_ 23  30/2  Y  CS5  SPAN N     P2964V2.0  20  30/2  N  CS5  SHR    CFP   32
****************************** Bottom of data ******************************
```

Figure 86. CF Channel Path Connectivity List

Note:

a. The *Source partition name* field indicates a name only when the Filter function is employed.

b. Column *CHID* for both the source and destination of the connection can be:

- the physical channel identifier to which the channel path is assigned
- the host communication adapter ID and port number
- the physical channel identifier combined with the host communication adapter port number.

c. Column *CF* indicates **Y** if at least one partition specified in the access or candidate list is of type CF or CF/OS, which is a prerequisite for establishing CF channel path connections.

d. Column *CU Type* indicates the type of the connected control unit(s).

e. Column *# Dev* indicates the number of CF devices connected to the CU(s) and used for the CF connection.

2. Select the source channel path for a coupling facility connection and the ***Connect to CF channel path*** action from the context menu (or action code **p**). HCD displays the Connect to CF Channel Path panel. The data-entry fields are shown in the following figure, with sample data:

```
              Connect to CF Channel Path


 Specify the following values.

 Source processor ID  . . . . . : XMPPROC1
 Source channel subsystem ID  . : 0
 Source channel path ID . . . . : 1B
 Source channel path type . . . : CFP

 Destination processor ID . . . . . . XMPPROC2  +
 Destination channel subsystem ID . . 0   +
 Destination channel path ID  . . . . 1B  +

 Timing-only link . . . . . . . . . . No
```

Figure 87. Connect to CF Channel Path

3. To establish the CF channel path connection, specify the destination processor ID, destination channel subsystem ID and destination channel path ID.

   If the CF control unit definition does not yet exist, HCD automatically generates a CF control unit and CF devices for a sending channel path when CF channel paths are connected. HCD uses type CFS for a (legacy) CF sender channel path and type CFP for a CF peer channel path. The sending CF channel paths, that connect one CSS of a processor to a CF partition, are assigned to the same CF control unit. For each CF sender channel path connection, HCD generates two CF devices. For each sending CF peer channel path, HCD generates seven (or 32) CF devices. This allows eight CF links between a single CSS

and a specific target CF partition. HCD proposes the highest unused control unit number and highest unused consecutive device numbers in the IODF. If a CF peer channel path does not connect to a target CF partition (that is, the sending function is not used), HCD does not connect the channel path to CF control unit and CF devices.

If a CF control unit definition is already used for another CF connection from the CSS of the sending CF channel path to the same target CF partition, HCD proposes the same control unit number. This control unit number may be overwritten by an unused control unit number, provided the partition lists of the channel paths on the existing control unit do not overlap with the partition list of the sending CF channel path for the new CF connection. Thus, it is possible to establish more than eight CF links between a single CSS of a CPC and a specific target CF partition.

Note: HCD checks the partition access lists of the channel paths for an overlap. That means, you can define an overlap in the partition candidate lists. In such cases however, you must ensure by operational means that at any one time, the CHPIDs of only one of the control units with overlapping partitions are configured online.

You can also choose to use the same control unit for all partitions of a sysplex that is shared across more than one CSS of a processor for the CF links to a specific target CF partition. This is necessary, if you plan to use a mix of shared (SHR) and spanned (SPAN) CIB connections between your syplex and the target CF partition. In such a case, it is recommended to define first the SPAN and then the SHR CHPIDs.

Note: If you start defining SHR CHPIDs from two CSSs connected to the same target CF partition, HCD proposes for each CSS its own control unit with the CHPIDs from its CSS. If you now want to add a connection with a spanned CHPID that is spanning both of the original CSSs, you cannot add the new spanned CHPID to both control units. Instead, you must break all the connections from one CSS, then connect the new spanned CHPID, with HCD forcing you to use just one control unit, and then reconnect all the broken CHPIDs, with HCD also forcing them to use the same control unit.

The ***Add CF Control Unit and Devices*** panel is displayed twice (for the source and for the destination side), where you must confirm or revise the values for the CF control unit and CF devices. The data-entry fields are shown in Figure 88 on page 106, with sample data:

```
                    Add CF Control Unit and Devices


 Confirm or revise the CF control unit number and device numbers
 for the CF control unit and devices to be defined.

 Processor ID . . . . . . . : XMPPROC1
 Channel subsystem ID . . . : 0
 Channel path ID  . . . . . : 1B      Operation mode . . : SHR
 Channel path type  . . . . : CFP

 Control unit number  . . FFFE  +

 Device number  . . . . . FFCF
 Number of devices  . . : 7
```

Figure 88. Add CF Control Unit and Devices

Note:

a. The CF control unit and device definitions are displayed on the Control Unit List and on the I/O Device List, but in a disabled state where they cannot be modified or deleted.

b. If you specified a timing-only link in the dialog from Figure 87 on page 105, then the field ***Number of devices*** is set to 0 and cannot be changed, as no devices are created for such links. For more information on timing-only links (STP links), read “Defining Server Time Protocol (STP) links” on page 107.

c. If you are defining a coupling facility link (CF link) the field ***Number of devices*** is initially defaulted according to the chpid and processor type. If both processors connected by the CF link, support more subchannels than initially set the ***Number of devices*** value can be changed.

   Changing the ***Number of devices*** results in a new device number (except you changed this value as well; in this case a message is shown) and a redisplay of the window showing the modified values. Pressing Enter again displays the same window again, but this time with the destination side values.

4. After you press the Enter key, HCD redisplays the CF Channel Path Connectivity List with the new connection defined.

Defining Server Time Protocol (STP) links

HCD supports Server Time Protocol (STP) links (timing-only links) between two zSeries (z890, z990) or later processors. Timing-only links are only needed in the case when coupling links are neither desired nor possible or not needed. If you want to define a coupling facility connection which will be used as a timing-only link, you must set the ***Timing-only link*** entry in the ***Connect to CF Channel Path*** panel (Figure 87 on page 105) to Yes. Both source and destination processors must be timing capable in this case, and the used channel paths must be from one of the channel path types CFP, CBP or CIB.

Establishing a timing-only link between two processors does not require a CF partition, but can be established between two OS partitions.

For an STP only link, HCD generates a control unit of type 'STP' on both sides of the connection. No devices are defined. 'STP' is used as control unit type in the ***CF Channel Path Connectivity List*** in column *CU type*, which indicates the type of the connecting control unit(s) for non-STP links (see Figure 86 on page 105).

For changing a CF connection to an STP only connection and vice versa, you must break the existing connection and establish a new one.

Disconnecting coupling facility channel path connections

Perform the following steps to break a coupling facility channel path connection:

1. On the Channel Path List select any channel path and the ***Connect CF channel path*** action from the context menu (or action code **f**) HCD displays the CF Channel Path Connectivity List showing all CF channel paths defined for a processor.
2. Select the source channel path for a coupling facility connection and the ***Disconnect*** action from the context menu (or action code **n**).

   Note: The appropriate CF control unit definition is removed implicitly with the last broken connection to the coupling facility to which the control unit belongs. The appropriate CF device definitions are removed implicitly, when the coupling facility connection to which they belong is broken.

Changing channel paths

To change channel path data you have to follow the same panel flow as for defining channel path data:

- Changing channel path characteristics
- Changing channel path access and candidate list

The following steps describe the panel flow and where you can change the data.

1. On the Channel Path List, select a channel path and the ***Change*** action from the context menu (or action code **c**).
2. On the following Change Channel Path Definition panel you can change channel path definitions such as:
   - Channel path ID (see also "Changing processors" on page 78 for an example of the Update Channel Path Identifiers panel, and how to change the CHPID values)

- Channel path type (see "Changing the type of a channel path" on page 108)
- Operation mode (see "Changing the operation mode of a channel path" on page 109)
- CHID
- Description
- If connected to a switch

  Dynamic switch ID
  Entry switch ID
  Entry port

3. After pressing the Enter key, the Define Access List is displayed. Select one or more partitions to be included in the access list.
4. After pressing the Enter key again, the Define Candidate List is displayed (if applicable). Select one or more partitions to be included in the candidate list.

You can also change channel path definitions (except the channel path ID) and the channel path's access and candidate list by simply typing over the appropriate values on the Channel Path List. To change the access and candidate list definitions, scroll to the right to see the channel path/partition matrix (refer to Figure 80 on page 100). Overwrite the values in the channel path/partition matrix with either a for access list and c for candidate list.

Changing the ID of a channel path

Changing the ID of a channel path may first require the disconnection of the entry switch and entry port on the channel path. If channel paths of multiple processors or channel subsystems (e.g. spanned CHPIDs) connect to the same entry switch and entry port, proceed as follows:

1. Remove the entry switch and entry port from the channel path definitions.
2. Change the channel path ID of the corresponding channel paths.
3. Once again add the entry switch and entry port to the channel paths.

Changing the type of a channel path

Changing the type of a channel path from parallel to serial (or vice versa) will result in changing the type of all other channel paths that are attached to the affected logical control units. When changing the type of a channel path:

- The new/changed channel path type must not conflict with the already existing channel path IDs, control unit and device parameters. Adjust the values of the affected control units and devices according to the rules of parallel or serial channel path type. (For information on how to change control unit processor attachment and device parameters, see: "Changing control units" on page 116.)
- When changing from serial to parallel, you have to disconnect the entry switch and entry port first, if the channel path is connected to a switch.
- When changing a channel path of type BL or BY that is connected to more than one control unit, the channel path has to be defined to a corresponding CVC (converter channel path) first and then be changed to serial.

Note: A channel path type change cannot be performed in one step while changing the channel path ID.

Changing the type of a coupling facility channel path

To change the type of CF channel paths, disconnect the channel path you want to change before performing the type change. Any coupling facility devices associated with the changed channel path are removed by HCD. The associated control unit is removed only when the last connection to the coupling facility to which the control unit belongs is broken. (For details on that task, see "Establishing coupling facility channel path connections" on page 104.)

Changing the operation mode of a channel path

Changing the operation mode of a channel path is dependent on its type. For example, BL, BY, CVC, CBY, and CF receiver channel paths cannot be shared.

Before you can change the operation mode of a channel path, the rules for partition access and candidate lists of those channel paths that are attached to the affected logical control units must conform to the rules for the new operation mode. You have to check which partitions have access to these channel paths. When changing the channel path operation mode from SHR to REC or DED, you first have to remove partitions in the appropriate access and candidate lists. The partition lists for the affected logical control units have to be changed when the mode change has been done.

Changing the operation mode of a channel path to SPAN

If you want to change the operation mode to SPAN for applicable channel path types, you must ensure that the CHPID is unused in those channel subsystems into which it should be spanned. This means that the CHPID whose operation mode you want to change, must be unique throughout the processor complex. So you need to distinguish the following scenarios:

- For an existing shared CHPID that is uniquely defined throughout all LCSSs of the processor:

  Enlarge its access and candidate lists with partitions from other channel subsystems. For a shared CHPID, in the Channel Path List, scroll right once for each CSS of the current processor to see the available partitions that you can specify for access or candidates.

```
  Goto  Filter  Backup  Query  Help
-------------------------------------------------------------------------------
                              Channel Path List       Row 1 of 1 More: <     >
Command ===> ___________________________________________________ Scroll ===> CSR

Select one or more channel paths, then press Enter. To add, use F11.

Processor ID : XMPP01     CSS ID  : 0   LPAR01 - LPAR02
 1=OS LPAR01    2=OS LPAR02   3=             4=             5=
 6=             7=            8=             9=             A=
 B=             C=            D=             E=             F=
        CHID+                   I/O Cluster  --------- Partitions 0x -----
/ CHPID AID/P Type+ Mode+ Mng   Name +       1 2 3 4 5 6 7 8 9 A B C D E F
_ 00    ____   IQD   SPAN  No    ________     a c  _ _ _ _ _ _ _ _ _ _ _ _
****************************** Bottom of data ******************************
```

  Figure 89. Channel Path List

  1=OS LPAR01 2=OS LPAR02 and --------- Partitions 0x ----- in our example indicate that partitions LPAR01 and LPAR02 are available as partitions of usage type OS in the CSS with ID=0 (0x).

  With the codes a and/or c you specify which partitions you want to access. Note that if the CHPID's operation mode in column ***Mode*** of the Channel Path List was SHR before your changes, it is set to SPAN automatically after specifying partitions from different channel subsystems (0x, 1x, ...).

- For an existing dedicated or reconfigurable CHPID that is uniquely defined throughout all LCSSs of the processor:

  You can change its operation mode to SPAN using the ***Change*** action from the context menu (or action code c) on the Channel Path List. In the subsequent Define Access List and Define Candidate List, you must select at least two partitions from different channel subsystems, because otherwise, HCD sets the operation mode to SHR.

- For any existing CHPID that is multiply defined throughout the LCSSs in the processor complex:

  You must delete the CHPID from all but one LCSS, before you can change its operation mode to SPAN, using the ***Change*** action from the context menu (or action code c) on the Channel Path List and selecting appropriate partitions from the Define Access List and the Define Candidate List.

When spanning a channel path, that has control unit(s) (and devices) attached, to a new CSS, HCD invokes a dialog asking whether these control unit(s) (and devices) should also be reachable from the new CSS.

```
        Confirm Copy Control Unit and Device Attachments


 Control unit and device attachments are defined on the named channel
 path, which are eligible to be copied to all channel subsystems the
 channel path gets newly spanned to. To confirm copy action, select
 Yes. To not copy any control unit or device attachment, select No.

 Processor ID . . . . . : ERV01      mix system
 Channel subsystem ID . : 0          zos prod 1 / spare
 Channel path ID  . . . : 11

 Copy confirmed . . . . . 1   1.  Yes
                              2.  No

  F1=Help    F2=Split   F3=Exit    F9=Swap   F12=Cancel
```

Figure 90. Confirm Copy Control Unit and Device Attachments

Specify Yes, if you want all existing CU and device connections of the designated channel path to be copied to all channel subsystems the channel path gets newly spanned to.

Changing the operation mode of CF channel paths

CF channel paths that connect a processor to the same coupling facility partition via the same control unit must be either all shared or all nonshared. Hence, if you want to change the operation mode for one channel path (from non-SHR to SHR), you have to change it for all. To do this proceed as follows:

1. Disconnect all receiving CF channel paths that connect a processor to the same coupling facility partition (see "Disconnecting coupling facility channel path connections" on page 107).
2. Change the operation mode of all sending CF channel paths.
3. Re-establish the connections for all channel paths that you disconnected in step "1" on page 110.

The associated coupling facility control unit and coupling facility devices are removed and generated again by HCD.

Changing a coupling facility connection

To change a coupling facility connection:

1. Disconnect a connection (see "Disconnecting coupling facility channel path connections" on page 107).
2. Establish the new connection (see "Establishing coupling facility channel path connections" on page 104).

Note: A Y (yes) in column Occ (occupied) of the channel path list indicates that this CHPID is occupied. This is useful if you have another IODF where the CF connection is already defined. If you wish to connect this path, you must first change the occupied status by overwriting the Y with N.

It is not possible to include the first CF or CF/OS LP in, or remove the last CF or CF/OS LP from, the combined access and candidate list of a connected CF peer channel. Instead, the CF connection first has to be removed. Then, the CF LP can be connected to or disconnected from the CF peer channel path; afterwards, the CF peer connection can be reestablished. This is to avoid implicit generations of deletions of CF control units and devices.

Aggregating channel paths

When selecting ***Aggregate channel paths*** from the Channel Path List against a channel path, HCD offers the possibility of moving all control units from a source channel path to the selected target channel path of the same processor. This is useful for combining several under-utilized channel paths to a single one.

You can aggregate channel paths using the ***Aggregate channel paths*** action. The following steps describe the procedure:

1. On the Channel Path List select a channel path and then the ***Aggregate channel paths*** action from the context menu or type action code **g** next to the selected CHPID.
2. On the following Aggregate CHPID definition panel you can enter the target channel path ID for the aggregate action.

```
                  Aggregate CHPID


Specify a CHPID to be aggregated with the selected target CHPID.

Processor ID . . . . : PROC1
Channel subsystem ID : 0
Channel path ID  . . : 00
Channel path type  . : CNC

CHPID to aggregate . . . __  +
```

Figure 91. Aggregate CHPID

HCD displays a list of control units that are currently attached to the source CHPID. If possible, each control unit shows the switch port to which it is connected. Also, the target switch port and the target link address after the aggregate is shown if HCD can determine these. You can select all or a subset of control units to be aggregated to the target CHPID. The selected control units and their attached I/O devices are disconnected from the source CHPID and connected to the target CHPID. The target CHPID may now be connected to a different switch than the source CHPID. Panel ***Select Control Units to be Aggregated*** allows you to change the control unit port and link address for the move to the target CHPID.

```
                  Select Control Units to be Aggregated
                                                                Row 1 of 12
Command ===> ___________________________________________ Scroll ===> PAGE

Select control units to be aggregated to target channel path. If none is
selected, no aggregation will take place.

  --- Control unit --   -- Source ---    -------- Target -------
/  Num   Type            Switch   Port    Switch  Port    Linkadd
_  0000  2107            50       09      50      09      6009
_  0010  2107            50       10      50      10      6010
_  0020  2107            50       11      50      11      6011
_  0030  2107            50       12      50      12      6012

F1=Help F2=Split F3=Exit F4=Prompt F5=Reset
F7=Backward F8=Forward F9=Swap F12=Cancel F22=Command
```

Figure 92. Select Control Units to be Aggregated

After successful aggregation, a message will be displayed and the Aggregate CHPID panel will remain to allow you to aggregate additional channel paths. If aggregation fails because of validation errors, the validation errors are displayed. If prompting for channel paths for aggregation, HCD will only show the channel paths that allow aggregation without validation errors. Prompting is thus a useful planning aid.

The **Aggregate Channel Paths** action is only possible if the following prerequisites are fulfilled:

- Source and target channel paths must be different.
- All selected control units connected to the source channel path must be connectable to the target channel path.
- The source channel path must not be connected to a control unit which is already connected to the target channel path. In addition, a link address - unit address - CUADD combination used by a control unit connected to the source channel path must not also be used by a control unit connected to the target channel path.

- Either the source channel path must have the same channel path mode as the target channel path, or all devices accessible by the source channel path must be connected to only one channel path.
- Source and target channel paths must have defined a dynamic switch.
- The user must not lose connectivity by a channel path aggregate action. The source channel path access and candidate list must be the same as or a subset of the target channel path access and candidate list.
- By connecting control units of the source channel path to the target channel path, the defined maximum value for the target channel path type (e.g. maximum number of unit address ranges) must not be exceeded.

As a result of an aggregation action, HCD will:

- Change the preferred channel path of a device to the target channel path if the source channel path was the preferred channel path of the device initially.
- Leave the reachability of devices by logical partitions unchanged.
- Move the CTC control units of the source channel path port to the entry port to which the target channel is connected.

Deleting channel paths

You can delete the definition of a channel path using the ***Delete*** action from the context menu (or action code **d**) on the Channel Path List. If you delete a spanned channel path, it is removed from all channel subsystems which had access to it.

Working with control units

The following section describes how to work with control units.

Defining control units

You need two steps to define a control unit:

- Define the control unit characteristics
- Define how the control unit is attached to processors.

Before you define a control unit, you should have defined the processors and channel paths to which the control unit is to be attached.

Defining the control unit characteristics

1. On the ***Primary Task Selection*** panel, select ***Define, modify, or view configuration data*** and on the resulting panel the object ***Control units***. HCD displays the Control Unit List showing all control units currently defined in the IODF.

```
  Goto  Filter  Backup  Query  Help
------------------------------------------------------------------------------
                              Control Unit List                 Row 145 of 339
Command ===> _____________________________________________ Scroll ===> CSR

Select one or more control units, then press Enter.  To add, use F11.

                            ---#---
/ CU   Type +        CUADD CSS MC  Serial-# + Description
_ 5E00 2105          6     5       28641      SUBCSE - S/N 28641
_ 5F00 2105          7     5       28641      SUBCSE - S/N 28641
_ 6000 2107          0     5       54321      SUBSQ02 - S/N 54321
_ 6100 2107          1     5       54321      SUBSQ02 - S/N 54321
_ 6200 2107          2     5       54321      SUBSQ02 - S/N 54321
_ 6300 2107          3     5       54321      SUBSQ02 - S/N 54321
_ 6400 2107          4     5       54321      SUBSQ02 - S/N 54321
_ 6500 2107          5     5       54321      SUBSQ02 - S/N 54321
 F1=Help      F2=Split     F3=Exit      F4=Prompt    F5=Reset     F7=Backward
 F8=Forward   F9=Swap     F10=Actions  F11=Add      F12=Cancel   F13=Instruct
F22=Command
```

Figure 93. Control Unit List

Column CUADD shows the CUADD value defined for the control unit, where available. If the CUADD is inconsistently set for the control unit among processors, an * is displayed.

Column #CSS shows the number of channel subsystems to which a control unit is connected. This column contains a value only if a connection exists.

Column #MC shows the greater of the number of managed channel paths defined for the connected processors or the number of managed channel paths defined for the selected processor when coming down from the processor. This column contains a value only if managed channel paths are defined for the control unit.

Note: The CF control units generated when connecting CF channel paths are listed but are disabled for any action. It is not possible to add a new such control unit via this dialog.

2. Use F11=Add to define a new control unit. The preceding data-entry fields are shown, with sample data:

```
                        Add Control Unit


 Specify or revise the following values.

 Control unit number  . . . . 00D1  +
 Control unit type  . . . . . 3990-3_______  +

 Serial number  . . . . . . . __________
 Description  . . . . . . . . DASD control unit_______________

 Connected to switches  . . . __  __  __  __  __  __  __  __  +
 Ports  . . . . . . . . . . . __  __  __  __  __  __  __  __  +

 If connected to a switch:

 Define more than eight ports . . 2   1.  Yes
                                      2.  No

 Propose CHPID/link addresses and
 unit addresses . . . . . . . . . 2   1.  Yes
                                      2.  No
```

Figure 94. Add Control Unit

Defining switch connections

The ***Add Control Unit*** panel can also be used to specify the switches and ports the control unit is attached to.

If you specify `Yes` for `Define more than eight ports`, the ***Define Control Unit Ports*** dialog will be displayed to allow you to specify up to 64 control unit/switch port connections. To connect a unit to a

maximum of 128 switch ports, in this dialog, you can invoke another panel to define an additional 64 switch port connections.

If you specify `Yes` for `Propose CHPID/link addresses and unit addresses` and the control unit is connected to at least one switch, HCD suggests control unit to processor attachment parameters (channel path/link addresses and the unit address range) based on the switch/ports the control unit is connected to. HCD will propose up to eight channel path/link address pairs, starting with the channel path that has the lowest number of devices attached to it.

If you add a new control unit (via Add or Add-like), HCD automatically assigns as many logical paths as possible for all processors defined.

The following prerequisites must be fulfilled for this function:

- The control unit must support FICON attachments and not be used for channel-to-channel (CTC) connections.
- The control unit must have physical switch / port connections (switch entry ports) defined.
- Channel paths that use the connected switch as a dynamic switch must exist.

HCD then automatically selects the channel paths and link addresses according to the following rules for each processor that has been defined.

- All channel paths that use a switch that connects to the control unit as a dynamic switch are candidates for assignment.
- The channel paths are sorted ascending by the value of the reversed channel path ID. The resulting sequence is again sorted ascending by the number of connected devices.
- The connected control unit ports are ordered ascending by the numbers of already connected control units and path connections, respectively.
- For each connected switch port in the resulting sequence, the channel paths are tested in sequence. If the switch port can be used as a link address, the CHPID/link address is taken.
- A maximum number (up to 8) of possible CHPID/link address combinations is assigned.

On the following ***Select Processor/Control Unit*** panel you can type over the fields that are different from the suggested attachment values.

Defining processor attachment data

1. After pressing the Enter key on the Add Control Unit panel HCD displays a list that shows all the defined processors. You can then define how the control unit is to be attached to one or more processors.

```
                            Select Processor / CU     Row 3 of 5 More:       >
Command ===> _______________________________________________ Scroll ===> CSR

Select processors to change CU/processor parameters, then press Enter.

Control unit number . . : 0000     Control unit type . . . : 3422

             ---------------Channel Path ID . Link Address + ---------------
/ Proc.CSSID 1------ 2------ 3------ 4------ 5------ 6------ 7------ 8------
_ XMPP01.0   09.0122 14.01A2 46.0222 52.02A2 33.0422 84.04A2 _______ _______
_ XMPP01.1   33.0422 84.04A2 0A.0522 14.05A2 _______ _______ _______ _______
_ XMPP01.2   33.0422 09.0722 14.07A2 _______ _______ _______ _______ _______
_ XMPP01.3   33.0422 84.04A2 0A.0522 14.05A2
```

Figure 95. Select Processor / Control Unit (1)

```
                            Select Processor / CU     Row 3 of 5 More: <     >
Command ===> ___________________________________________________ Scroll ===> CSR

Select processors to change CU/processor parameters, then press Enter.

Control unit number . . : 0000     Control unit type . . . : 3422

                 CU   --------------Unit Address . Unit Range + -------------
/ Proc.CSSID Att ADD+ 1----- 2----- 3----- 4----- 5----- 6----- 7----- 8-----
_ XMPP01.0     Y 00   00.256 ______ ______ ______ ______ ______ ______ ______
_ XMPP01.1     Y 00   00.256 ______ ______ ______ ______ ______ ______ ______
_ XMPP01.2     Y 00   00.256 ______ ______ ______ ______ ______ ______ ______
_ XMPP01.3     Y 00   00.256 ______ ______ ______ ______ ______ ______ ______
```

Figure 96. Select Processor / Control Unit (2)

A Y for Yes in the `Att` column indicates that the control unit is attached to the processor.

2. Select a processor and the ***Select (connect/change)*** action from the context menu (or action code **s**).

   When a control unit is attached to multiple processors, you can use the ***Group connect*** action from the context menu (or action code **g**). This group action is particularly useful when performing symmetric changes, for example, on CPCs defined in a processor cluster. The changes are applied to all selected processors, when you issued the change action against a group of processors.

   When you issue a change or group connect action, the following panel for processor-dependent control unit information is displayed:

```
                                 Add Control Unit


 Specify or revise the following values.

 Control unit number  . : 0099         Type . . . . . . : 2105
 Processor ID . . . . . : FR38LPAR     Raised floor production
 Channel Subsystem ID . :

 Channel path IDs . . . . 07    08     *     *     *    __    __    __    +
 Link address . . . . . . 80__  81__  ____  ____  ____  ____  ____  ____  +

 Unit address . . . . . . __    __    __    __    __    __    __    __    +
 Number of units  . . . . ___   ___   ___   ___   ___   ___   ___   ___

 Logical address  . . . . __  + (same as CUADD)

 Protocol . . . . . . . . __  + (D,S or S4)
 I/O concurrency level  . 2   + (1, 2 or 3)
```

Figure 97. Add Control Unit

3. On the Add Control Unit panel specify the channel paths that connect the control unit to the processor.

   If the control unit is attached to a switch, you have to define a link address for each channel path. The link address is the port to which the control unit attaches. If the control unit attaches only to one port, the link address is the same for each channel. For addressing the target control unit in a fabric containing cascade switching, a two-byte link address is used, which specifies as first byte the switch address and as second byte the port address to which the control unit is attached.

   For a description what the link address is, see Figure 138 on page 143, Figure 139 on page 144 and Figure 141 on page 145.

   Note: For managed control units, i.e., control units that can have managed channel paths assigned by DCM, you must indicate how many managed channel paths can be connected to the control unit. Enter at least one static channel path and the corresponding link address, and, in addition, an * (instead of the channel path ID and link address) for each managed channel path.

   You must also specify the unit address and the number of units, that is the unit address range of I/O devices that the control unit recognizes. Serial control units may have specified only one unit address range starting with 00.

If the path to the control unit is not unique, and more than one serial control unit connects to the same channel path via the same link address, you have to specify a logical address (CUADD parameter). For more information refer to the explanation of the CUADD in the *IOCP User's Guide* for your processor.

4. Press the Enter key. HCD displays the updated Select Processor/Control Unit panel. There you may scroll to the right (using F20=Right) to see the data that you have entered on the previous panel.
5. Repeat defining processor attachment data for all processors the control unit should be attached to.
6. Press the Enter key to return to the Control Unit List.

Upgrading to two-byte link addresses

In a FICON fabric, all one-byte link addresses on a channel path may need to be migrated to a two-byte link address. HCD supports this definition change via the Change Channel Path Link Addresses dialog. If you specify a two-byte link address on a control unit for a specific channel path, and there are already one-byte link addresses specified on that path, the panel shown in Figure 98 on page 116 appears.

This panel shows all link addresses specified for the specific channel path that must be changed. If there has been an entry switch defined for the channel, its ID and switch address (if defined) are displayed; else the displayed information is taken from the dynamic switch.

You can change the switch address. HCD then uses the modified value to preset the two-byte link addresses in the displayed New column. Its value is stored, if the entry switch is defined. Alternatively, the new two-byte link addresses can be entered.

Pressing Enter will change the control unit link addresses on the corresponding control units.

```
                  Change Channel Path Link Addresses

Command ===> ___________________________________________ Scroll ===> PAGE

Specify or revise the following values.

Processor ID . . . . . : MCSS01
Channel Path ID  . . . : 81
Entry Switch ID  . . . : B0

Switch Address . . . . . 26

Control Unit  -- Link Address --
Number CSSID  Current       New
6000   0      02            2602
6200   1      03            2603
6400   1      04            2604
6600   1      05            2605
7000   2      09            2609
0E06   2      FE            26FE
***************************** Bottom of data ***************************


F1=Help        F2=Split       F3=Exit        F5=Reset       F7=Backward
F8=Forward     F9=Swap       F12=Cancel     F22=Command
```

Figure 98. Change Channel Path Link Addresses

You may want to change link addresses from two byte to one byte. This is possible, as long as all affected control units are attached to the channel path switch. If a defined two-byte link address is changed to a one-byte link address on a given channel path, all other two-byte link addresses defined for control units attached to that channel have to be changed to a one-byte link address also.

Changing control units

To change control unit data, follow the same panel flow as for defining control units.

- Changing Control Unit Characteristics
- Changing Processor Attachment Data

The following steps describe the panel flow and where you can change the data.

1. On the Control Unit List select a control unit and the ***Change*** action from the context menu (or action code **C**).
2. On the following Change Control Unit Definition panel you can change the following data:
   - Control unit number
   - Type-model
   - Serial number
   - Description
   - Connections to switches/ports

   Note: You can also change these control unit definitions (except the control unit number and the connections to switches/ports) by simply typing over the appropriate columns on the Control Unit List.
3. After pressing the Enter key you see the Select Processor/Control Unit panel. Select a processor and the ***Select (connect/change)*** action from the context menu (or action code **S**).
4. On the following Change Control Unit Definition panel you can change the processor attachment data:
   - Channel paths / Link addresses
   - Unit addresses / Number of units
   - Logical address
   - Protocol
   - I/O concurrency level

When changing control unit data of control units that affect other control unit or device data (like unit address/ranges), a list is displayed that shows all affected control units and proposed new address ranges for those control units. A panel like the following one is displayed:

```
                    Modify Affected Control Unit Parameters
                                                                Row 1 of 2

 Specify or revise any changes to the control unit parameters in the
 following list.

 Processor ID  . . . . . . : PROC2
 Channel Subsystem ID  . . :

 CU   Prot. I/O +   -------------Unit Address . Unit Range + --------------
      +     Conc.   1----- 2----- 3----- 4----- 5----- 6----- 7----- 8-----
 0012  S     2      20.016
 0013  S     2      20.016
```

Figure 99. Modify Affected Control Unit Parameters

After you modified control unit data (like protocol, I/O concurrency level, or unit address range), and pressed the Enter key, the Modify Device Parameters panel is shown with the devices attached to the affected control units. The devices are grouped by ranges:

```
                           Modify Device Parameters
                                                  Row 1 of 1 More:      >

 Specify or revise any changes to the device parameters in the following list.
 To view attached control units, scroll to the right.

 Processor ID . . . .  : PROC2        This is the second processor
 Channel Subsystem ID  :

 ---------Device--------- ---UA----                   Preferred  Exposure
 No., Range Type          Old New + Time-Out  STADET  CHPID +    Device
 0012,016   3390          12  20    Yes       No      __
```

Figure 100. Modify Device Parameters

HCD proposes starting unit addresses for the listed device groups.

Use the F20=Right key to scroll to the right to see the attached control units. Accept or change the definitions for unit address (UA New), Time-Out, STADET, and preferred CHPID.

Changing control unit attachment parameters for multiple processors

You can change control unit (CU) attachment parameters or attach a control unit for a group of processors. If all parameters to be changed are identical, use the following group action.

1. On the Control Unit List, select a control unit that is attached to the group of processors and use the ***Change*** action from the context menu (or action code c).
2. On the Change Control Unit panel press the Enter key. HCD then displays a Select Processor/Control Unit panel with a list of processors already defined (see Figure 95 on page 114).
3. Select the processors for which you want to change the control unit-processor definitions and use the ***Group change*** action from the context menu (or action code g).
4. The Change Control Unit Definition panel is displayed showing the values/attributes for the first processor in the group. An * in the Processor ID field indicates that you are using the ***Group connect*** action from the context menu and the changes will be applied to more than one processor.

Disconnecting control units from a processor

1. On the Control Unit List, select a control unit and the ***Change*** action from the context menu (or action code c). HCD displays the Change Control Unit Definition panel.
2. On the Change Control Unit Definition panel, press the Enter key. HCD displays the Select Processor/Control Unit panel.
3. On the Select Processor/Control Unit panel select a processor and the ***Disconnect*** action from the context menu (or action code n).

Disconnecting multiple control units from a processor:

If you want to disconnect multiple control units from one processor in one step, open the Control Unit list via the Channel Path List. On the Control Unit List, select one or multiple control units and use the ***Disconnect*** action from the context menu (or action code n).

Deleting control units

You can delete the definition of a control unit using the ***Delete*** action from the context menu (or action code d). Deleting a control unit means that all connections to channel paths, switches, and I/O devices are also deleted; these objects are not deleted.

Working with devices

Operating systems need I/O device data to address the devices. The CSS also needs the data to provide the required information for performing I/O operations to a specific device.

Defining devices

You need three steps to define an I/O device:

- Define device characteristics and control unit connection
- Define CSS-related definitions for a device
- Define OS-related definitions for a device (including EDT and esoteric group assignment - MVS-type only).

Before you define a device that should be defined to an operating system and to the channel subsystem (CSS), you must have defined the operating system configuration, processor, channel path, and control unit. HCD omits some steps if data is missing. For example:

- You cannot define the processor data for the device if the device is not attached to a control unit or the control unit is not attached to a processor.
- You cannot define the EDT/esoteric group data for the device until you have defined an EDT for the OS.

Defining device data

1. On the ***Primary Task Selection*** panel, select ***Define, modify, or view configuration data*** and on the resulting panel, select ***I/O devices***. HCD displays an initial I/O Device List where devices with consecutive device numbers having the same definitions are automatically grouped together (Figure 101 on page 119).

   A device group is shown as `device number,range`. A range value of one (1) is not explicitly shown. For example, the entry `'0002,4  3390A'` indicates a device group of four devices of type 3390A with consecutive device numbers from 0002 through 0005. Using action ***Work with single I/O devices*** from the context menu (or action code **s**) displays the I/O Device list showing all single devices defined in the IODF, with all device groups resolved (Figure 102 on page 120).

```
  Goto  Filter  Backup  Query  Help
------------------------------------------------------------------------------
                              I/O Device List        Row 1 of 2370 More:       >
Command ===> ___________________________________________ Scroll ===> CSR

Select one or more devices, then press Enter. To add, use F11.

  ----------Device------ --#--- --------Control Unit Numbers + --------
/ Number   Type +        CSS OS 1--- 2--- 3--- 4--- 5--- 6--- 7--- 8---
_ 0000     3380              1  ____ ____ ____ ____ ____ ____ ____ ____
_ 0001     3390A         3   1  0001 0002 ____ ____ ____ ____ ____ ____
_ 0001     3390A         2   1  0001 ____ ____ ____ ____ ____ ____ ____
_ 0001     3390A             1  ____ ____ ____ ____ ____ ____ ____ ____
s 0002,4   3390A         2   1  0001 ____ ____ ____ ____ ____ ____ ____
_ 0002,8   3390A         3      0001 0002 ____ ____ ____ ____ ____ ____
_ 0006,3   3390          2   1  0001 ____ ____ ____ ____ ____ ____ ____
_ 000A     3380          2   1  0001 ____ ____ ____ ____ ____ ____ ____
_ 000B     3820              1  ____ ____ ____ ____ ____ ____ ____ ____
_ 000C,12  3590              1  ____ ____ ____ ____ ____ ____ ____ ____
# FFFC     CFS                 FFFE ____ ____ ____ ____ ____ ____ ____
# FFFD     CFS                 FFFE ____ ____ ____ ____ ____ ____ ____
# FFFE     CFS                 FFFE ____ ____ ____ ____ ____ ____ ____
# FFFF     CFS                 FFFE ____ ____ ____ ____ ____ ____ ____

 F1=Help      F2=Split     F3=Exit      F4=Prompt    F5=Reset     F7=Backward
 F8=Forward   F9=Swap     F10=Actions  F11=Add      F12=Cancel   F13=Instruct
F20=Right    F22=Command
```

Figure 101. I/O Device List with device groups

The # sign in front of a row indicates that this row is disabled. You cannot modify or delete it. In the example from Figure 101 on page 119, you can see four devices of type CFS that are used for coupling facility connections.

If you scroll to the right in the I/O Device List, you can see additional columns ***PU*** (showing the PPRC usage), ***Serial-#***, ***Description***, and ***VOLSER***.

```
  Goto  Filter  Backup  Query  Help
------------------------------------------------------------------------------
                              I/O Device List      Row 9 of 49852 More:       >
Command ===> ___________________________________________ Scroll ===> CSR

Select one or more devices, then press Enter. To add, use F11.

  ----------Device------ --#--- --------Control Unit Numbers + --------
/ Number   Type +        CSS OS 1--- 2--- 3--- 4--- 5--- 6--- 7--- 8---
_ 0002     3390A         2   1  0001 ____ ____ ____ ____ ____ ____ ____
_ 0002     3390A         3      0001 0002 ____ ____ ____ ____ ____ ____
_ 0003     3390A         2   1  0001 ____ ____ ____ ____ ____ ____ ____
_ 0003     3390A         3      0001 0002 ____ ____ ____ ____ ____ ____
_ 0004     3390A         2   1  0001 ____ ____ ____ ____ ____ ____ ____
_ 0004     3390A         3      0001 0002 ____ ____ ____ ____ ____ ____
_ 0005     3390A         2   1  0001 ____ ____ ____ ____ ____ ____ ____
_ 0005     3390A         3      0001 0002 ____ ____ ____ ____ ____ ____
_ 0006     3390          2   1  0001 ____ ____ ____ ____ ____ ____ ____
_ 0006     3390A         3      0001 0002 ____ ____ ____ ____ ____ ____
_ 0007     3390          2   1  0001 ____ ____ ____ ____ ____ ____ ____
_ 0007     3390A         3      0001 0002 ____ ____ ____ ____ ____ ____
 F1=Help      F2=Split     F3=Exit      F4=Prompt    F5=Reset     F7=Backward
 F8=Forward   F9=Swap     F10=Actions  F11=Add      F12=Cancel   F13=Instruct
F20=Right    F22=Command
```

Figure 102. I/O Device List with single devices

Columns CSS and OS state the number of channel subsystems and operating systems accessing the device. If the I/O Device List is called from the Processor List or Channel Subsystem List, the number in the ***IM*** column states how many partitions (images) of the selected processor or channel subsystem are accessing the device. For basic processors this value is one.

If the I/O Device List is called from either

- the Operating System Configuration List
- the Processor List for SMP processor
- the Channel Subsystem List for XMP processor

using action ***Work with attached devices*** from the context menu (or action code **u**), then the list contains an additional column ***SS*** which indicates, if applicable, in which subchannel set the device should be placed.

2. Use F11=Add to add I/O devices. The data-entry fields are shown in the following figure, with sample data:

```
                              Add Device


 Specify or revise the following values.

 Device number  . . . . . . . . 01E1  +  (0000 - FFFF)
 Number of devices  . . . . . . 8
 Device type  . . . . . . . . . 3390A          +

 Serial number  . . . . . . . . _________
 Description  . . . . . . . . . PAV alias device ______________

 Volume serial number . . . . . ______  (for DASD)

 PPRC usage . . . . . . . . . . _  + (for DASD)

 Connected to CUs . . 01E1  ____  ____  ____  ____  ____  ____  ____  +


  F1=Help     F2=Split    F3=Exit     F4=Prompt   F5=Reset    F9=Swap
  F12=Cancel
```

Figure 103. Add Device

In the ***Device number*** field, you can use the `F4=Prompt` key to have a list displayed containing unused device number ranges. If you select a proposal from this list, HCD fills ***Device number*** and ***Number of devices*** with the selected values.

The **Add Device** panel can also be used to specify the control units the devices are connected to.

For a DASD device, you can optionally define its peer-to-peer remote copy (PPRC) usage type as either:

Duplex (D)
: A volume composed of two physical devices within the same or different storage subsystems that are defined as a pair by a dual copy, PPRC or XRC operation and are not in suspended or pending state. The operation records the same data onto each volume.

FlashCopy® (F)
: A point-in-time copy services function that can quickly copy data from a source location to a target location.

Simplex (S)
: A volume is in the simplex state if it is not part of a dual copy or a remote copy volume pair. Ending a volume pair returns the two devices to the simplex state. In this case, three is no longer any capability for either automatic updates of the secondary device or for logging changes as it would be the case in a suspended state.

Utility (U)
: A volume that is available to be used by the extended remote copy function to perform data mover I/O for a primary site storage control's XRC-related data. A device that is used to gather information about the environment for configuration setup. It is also used to issue PPRC Freeze commands to the SSID-pair.

Nonsysplex (N)
: A special case of SIMPLEX which can be used for z/VM devices in a z/VM-z/OS-mixed environment.

Whereas a classification as ***Flashcopy***, ***Simplex***, ***Utility***, or ***Nonsysplex*** is only of a descriptive character, the ***Duplex*** usage type of a DASD device triggers the following: Duplex devices, attached to a primary operating system configuration with OFFLINE=YES are defined to an optional D/R site OS configuration with OFFLINE=NO and vice versa, when the D/R site OS configuration is generated (see also "D/R site OS configurations" on page 70).

Since VM dummy devices are definable with an arbitrary device type, a device with an unknown device type is accepted by HCD. It is treated like an unsupported device with the device type DUMMY. For MVS-type systems, you have to explicitly define the device as DUMMY.

Defining multiple devices in one step

You can define, in one operation, a group of I/O devices of the same type and with consecutive device numbers. You define the group by specifying the first device number and the number of devices in the group. Then HCD applies the definition to all devices in the group. On the I/O Device List, you can type over the values that should be different.

Use and definition of serial number of device

HCD allows you to assign the same device number to more than one I/O device; that is, device numbers alone do *not* uniquely identify a device in an IODF. To clearly identify devices, HCD keeps track of each occurrence of the same device number by appending an internal suffix to the device number.

When ***activating a configuration dynamically***, HCD might be unable to determine whether certain I/O devices in the ***currently active IODF*** and the ***IODF to be activated*** are physically the same. This may happen, if the new IODF was not created by copying or updating the current IODF but was newly created by migrating with IOCP or using the HCD dialog. In this case HCD is unable to determine which of the devices are physically identical.

To avoid problems when activating a configuration dynamically, you should check if more than one device uses the same device number attached to the same control units in the current IODF and in the newly

created (not copied) IODF. If so, specify the same *serial number* for the devices that HCD should treat as physically the same.

Defining CSS-related definitions for a device

If you have defined a connection to a control unit on the ***Add Device panel***, and the control unit is connected to a processor, then HCD displays the ***Device / Processor Definition*** panel (Figure 104 on page 122) that shows the processors to which the control units are attached.

```
                   Device / Processor Definition
                                                          Row 1 of 1

 Select processors to change device/processor definitions, then
 press Enter.

 Device number  . . : 01E1           Number of devices  . : 8
 Device type  . . . : 3390A

                                          Preferred  Device Candidate List
/ Proc.CSSID  SS+  UA+  Time-Out  STADET  CHPID +    Explicit         Null
_ XMPPRO1.0    1   05   No        Yes     __         No               ___
_ G29.0        1   F0   No        No      __         No               ___
_ G29.1        1   F0   No        No      __         No               ___
 ************************** BOTTOM OF DATA ******************************
```

Figure 104. Device / Processor Definition

On the ***Device / Processor Definition*** panel you can proceed in two ways:

- You can specify the CSS-related definitions directly by typing over the fields in each column. If you want to specify an explicit device candidate list for a device, type 'yes' into column ***Device Candidate List - Explicit***. This leads you to panel ***Define Device Candidate List*** (Figure 106 on page 123).
- You can select a processor and press the Enter key. The ***Define Device / Processor*** panel is displayed (Figure 105 on page 122). From this panel you can edit the same values as shown in the ***Device / Processor Definition*** panel.

```
                    Define Device / Processor


 Specify or revise the following values.

 Device number  . . . : 01E1           Number of devices . . . . : 8
 Device type  . . . . : 3390A
 Processor ID . . . . : XMPPRO1
 Channel subsystem ID : 0

 Subchannel set ID  . . . . . . . _   +
 Unit address . . . . . . . . . . E1  + (Only necessary when different from
                                      the last 2 digits of device number)
 Time-Out . . . . . . . . . . . . . No   (Yes or No)
 STADET . . . . . . . . . . . . . . Yes  (Yes or No)

 Preferred CHPID  . . . . . . . . . __  +
 Explicit device candidate list . . No   (Yes or No)
```

Figure 105. Define Device / Processor

Defining the subchannel set for a device

Starting with z9 EC processors, each channel subsystem contains more than one subchannel set (SS 0, SS 1), where you can place the devices. Starting with z/OS V1R7 HCD, you can place PAV alias devices (types 3380A and 3390A) into an alternative subchannel set. In SS 0, you can place 63.75K devices, and in SS 1 you can place 64K-1 PAV alias devices.

Starting with zEnterprise® processors, each channel subsystem contains a third subchannel set (SS 2). Starting with z/OS V1R10 HCD, you can place PAV alias devices (types 3380A and 3390A), PPRC secondary devices (type 3390D) and Db2® data backup volumes (type 3390S) into an alternate subchannel set. You cannot define 3390D and 3390S devices in subchannel set SS 0.

You can specify the subchannel set ID for a device either in column **SS** of Figure 104 on page 122 or in field **Subchannel set ID** of Figure 105 on page 122.

HCD messages that refer to a device in a subchannel set with a subchannel set ID > 0 will display the device number in the format *n-devnumber* where n is the subchannel set ID. For example, the device 1234 located in subchannel set 1 will show up as *1-1234*. A device 4567 in subchannel set 0 will further on be shown as *4567*.

Rules for placing devices into subchannel sets:

Observe the following rules and recommendations when working with different subchannel sets:

- There is no required correspondence between device numbers in the subchannel sets. For example,

  ```
  devices in the range 8000-807F in SS0
  devices in the range 8000-807F in SS1 (PAV alias devices)
  ```

  may relate to completely separate devices. However, you can use this feature to have PAV base and aliases in different subchannel sets, but with the same device numbers.
- Unit addresses of base and alias devices on a single control unit must be unique. These cannot be duplicated across subchannel sets. So if you want to define the PAV base and alias devices in the range 8000-807F in different subchannel sets, but on the same control unit, you can define them like follows:

  ```
  base  devices, range 8000-807F in SS0, unit address 00-7F  (CU number 8000)
  alias devices, range 8000-807F in SS1, unit address 80-FF  (CU number 8000)
  ```
- You can use dynamic reconfiguration to move eligible devices from SS 0 to an alternate subchannel set.

Restricting Partition Access for Devices

You can restrict logical partition access to an I/O device on a shared channel path by using the explicit device candidate list to select which logical partitions can access that I/O device. On the ***Define Device / Processor*** panel enter `Yes` or `No` in the `Explicit device candidate list` field to specify whether you want to restrict logical partition access to an I/O device:

- A `No` specifies that all logical partitions can access this I/O device. `No` is the default; all logical partitions are in this I/O device's candidate list.
- A `Yes` specifies that only your selected logical partitions can access this I/O device. Note that the partition must also be in the channel path access or candidate list to access the device. On the Define Device Candidate List, place a slash (/) character to the left of each selected Partition Name.

If you specify `Yes` in the `Explicit device candidate list` field, the following panel is displayed, showing possible candidate partitions:

```
             Define Device Candidate List
                                                        Row 1 of 6

 Select one or more partitions to allow them to access the
 device, or ENTER to continue without selection.

 Device number  . . . : 01E1      Number of devices  . . . : 8
 Device type  . . . . : 3745
 Processor ID . . . . : PROC1     This is the main processor
 Channel subsystem ID :

 / Partition Name  Description                       Reachable
 _ PROD1           First production partition        Yes
 _ PROD2           Second production partition       Yes
 _ TEST1           First test system                 No
 _ TEST2           Second test system                Yes
 _ TEST3           CF partition                      No
 _ TEST4           OS partition                      No
```

Figure 106. Define Device Candidate List

A Yes in the Reachable column indicates that the device can be reached from the respective partition, through at least one physical channel. You can only include reachable partitions into the explicit device candidate list by typing a slash ('/') into the action column. Deleting the slash means to remove the respective partition from the device candidate list.

Null device candidate list for XMP processors

If devices are connected to a control unit which is shared between multiple channel subsystems, some (not all) of these devices may specify an empty (or null) device candidate list for one or more CSSs. You create a null device candidate list for a device either by deselecting all candidate partitions from an existing list or by not selecting any partition for a new list.

If you define a null device candidate list of a device for a certain CSS, then no partition of this CSS may have access to the device. If you define an explicit device candidate list for a device, the ***Device / Processor Definition*** panel (Figure 104 on page 122) indicates whether this candidate list is a null device candidate list in column ***Device Candidate List - Null***. If no partition is allowed to have access to the device, value Yes is shown, otherwise value No. This field is left blank if no explicit device candidate list exists for the selected device (which is the default when creating new devices).

Defining OS-related definitions for a device

1. After pressing the Enter key on the ***Define Device / Processor*** panel, the ***Device / Processor Definition*** panel is displayed again. Select another processor or press the Enter key again to display the ***Define Device to Operating System Configuration*** panel that shows all the defined OS configurations.

```
            Define Device to Operating System Configuration
                                                          Row 1 of 4
Command ===> _____________________________________ Scroll ===> CSR

Select OSs to connect or disconnect devices, then press Enter.

Device number  . : 0054          Number of devices  : 1
Device type  . . : 3390A

Subchannel Sets used in processor configurations  : 1,3

/ Config. ID   Type     SS Description                      Defined
_ MVS          MVS      3                                   Yes
_ MVS1         MVS      1                                   Yes
_ VM           VM
_ VM1          VM
************************* Bottom of data ***************************



 F1=Help       F2=Split      F3=Exit       F4=Prompt     F5=Reset
 F6=Previous   F7=Backward   F8=Forward    F9=Swap      F12=Cancel
F22=Command
```

Figure 107. Define Device to Operating System Configuration

Select an operating system and the ***Select (connect/change)*** action from the context menu (or action code **S**).

As described in "Defining the subchannel set for a device" on page 122, starting with 2094 (z9 EC) processors, you can place PAV alias devices (types 3380A and 3390A) into SS 1.

If you define a PAV alias device, as shown in our example from Figure 103 on page 120, HCD displays the ***Specify Subchannel Set ID*** panel that asks for the subchannel set where you want to place the device. The default depends on the device type specified.

```
                    Specify Subchannel Set ID


 Specify the ID of the subchannel set into which devices are
 placed, then press Enter.

 Configuration ID . : OPSYS01
 Device number  . . : 01E1           Number of devices  : 8
 Device type  . . . : 3390A

 Subchannel Set ID    1  +

  F1=Help    F2=Split   F3=Exit    F4=Prompt  F5=Reset   F9=Swap
  F12=Cancel
```

Figure 108. Specify Subchannel Set ID

2. Pressing Enter on the dialog from Figure 108 on page 125 brings you to the following panel where you can now define the data about device parameters and features that are required by the operating system configuration.

```
               Define Device Parameters / Features
                                                                  Row 1 of 4

 Specify or revise the values below.

 Configuration ID . : OPSYS01      MVS or z/OS operating system
 Device number  . . : 01E1         Number of devices  : 8
 Device type  . . . : 3390A

 Parameter/
 Feature     Value +          R Description
 WLMPAV      Yes                Device supports work load manager
 ***************************** BOTTOM OF DATA ***************************
```

Figure 109. Define Device Parameters / Features

The `Parameter/Feature` fields vary depending on the I/O device type and operating system type.

A plus sign (+) in the `Value` column indicates that you may use F4=Prompt to get a list of possible values for the parameter/feature in the same row. Note that not all parameters are promptable.

A Y in the R column indicates that a value for the parameter/feature in the same row is required.

You accomplish the change by accepting the default values or by changing the `Value` entries and pressing the Enter key. The default values are set in the UIM for the device type. For parameters you can specify different default values via the OS_PARM_DEFAULT keyword in the HCD profile.

3. For eligible devices, after you have defined the device parameter and feature data and pressed the Enter key, HCD displays the ***Assign/Unassign Device to Esoteric*** panel.

```
            Assign/Unassign Device to Esoteric
                                                                Row 1 of 2

 Specify Yes to assign or No to unassign. To view devices already
 assigned to esoteric, select and press Enter.

 Configuration ID : OPSYS01           MVS or z/OS operating system
 Device number  . : 01E1              Number of devices  : 8
 Device type  . . : 3390B             Generic  . . . . . : 3390B

 / EDT.Esoteric  Assigned  Starting Number Number of Devices
 _ A1.ES001      No        ____            ____
 _ A2.ES002      No        ____            ____
 ***************************** BOTTOM OF DATA ******************************
```

Figure 110. Assign/Unassigned Device to Esoteric

4. On the Assign/Unassign Devices to Esoterics panel, overwrite the values in the `Assigned` column to assign (`Yes`) or unassign (`No`) devices to the selected esoterics.

If you do not want to assign a complete group of devices, you can limit the range by specifying a starting number and the number of devices. If you omit the number of devices, 1 is assumed.

Changing devices

To change device data, you have to follow the same panel flow as for defining a device:

1. Changing device and control unit definitions
2. Changing CSS-related definitions
3. Changing OS-related definitions

The following steps describe the panel flow and where you can change which data.

1. On the I/O Device List, select a device or a group of devices and the ***Change*** action from the context menu (or action code **C**). HCD shows the following panel:

```
                Change Device Definition
CBDPDV30

Specify or revise the following values.

Device number  . . . . . . . : 0005  (0000 - FFFF)
Number of devices  . . . . . : 4
Device type  . . . . . . . . : 3390

Serial number  . . . . . . . . __________  +
Description  . . . . . . . . . ________________________________

Volume serial number . . . . . ______  + (for DASD)

PPRC usage . . . . . . . . . . _  + (for DASD)

Connected to CUs . 0001  ____  ____  ____  ____  ____  ____  ____  +

ENTER to continue.
```

Figure 111. Change Device Definition

   Depending on whether you invoke this action for a single device or a group of devices, the line ***Number of devices*** shows how many devices are affected by the change.

2. On the ***Change Device Definition*** panel you can change device and control unit definitions such as:
   - Serial number
   - Description
   - Volume serial number
   - PPRC usage
   - Control unit connections
3. After pressing the Enter key, the ***Device / Processor Definition*** panel is displayed. Select a processor and press the Enter key to change the following CSS-related definitions:
   - Subchannel set ID
   - Unit address
   - Time-Out
   - STADET
   - Preferred CHPID
   - Explicit device candidate list
4. After pressing the Enter key twice , the Define Device to Operating System Configuration panel is displayed. Select an operating system and the ***Select (connect/change)*** action from the context menu (or action code **S**) if you want to change the following OS-related definitions:
   - Parameters/Features

- Assignments to esoterics

5. After pressing the Enter key again, the Assign/Unassign Device to Esoteric panel is displayed. If you want to change the assignment of devices to esoterics, type over the values in the `Assigned` column by either `Yes` or `No`.
6. Press the Enter key twice to return to the I/O Device List.

Changing CSS-related definitions of a group of devices

You can change CSS-related definitions of a group of devices using the ***CSS group change*** action. This helps you, for example, to attach a group of DASDs to another control unit. To do this, the devices to be changed must be in the same device group, that is, they must all be of type, for example, DASD or TAPE.

1. On the ***I/O Device List*** select one or more devices and use the ***CSS group change*** action from the context menu (or action code **g**). The Change Device Group panel is displayed.

```
Change Device Group


Specify the control units the devices are attached to.

Connected to CUs . . 00D1  00D2  ____  ____  ____  ____  ____  ____  +
```

   HCD displays the definition of the first device in the group. You can modify this definition and HCD applies the definition to all devices in the group.
2. After pressing the Enter key, HCD displays the Change Device Group / Processor Definition panel, where you can select the processors for which you want to change the CSS-related definitions. For an example of this panel, see "Defining CSS-related definitions for a device" on page 122.

Changing esoterics for a group of devices

For a description of how to change esoterics for multiple devices, refer to "Adding devices to esoterics" on page 75.

Changing OS-related definitions of a group of devices

You can change OS-related definitions for a group of devices using the ***OS group change*** action (or action code **o**). This helps you, for example, to attach a group of devices to another operating system. The device parameter/features will be the same for all devices in the group.

If you want to change OS-related definitions for PAV devices, HCD displays a similar dialog as shown in Figure 108 on page 125 which lets you change or specify the subchannel set ID where to place the device or the device group.

1. On the I/O Device List for device groups or single devices select one or more devices or groups and use the ***OS group change*** action from the context menu (or action code **o**). HCD displays the Change Device Group / Operating System Configuration dialog.

```
             Change Device Group / Operating System Configuration
                                                          Row 1 of 1
 Command ===> ___________________________________________ Scroll ===> PAGE

 Select OSs to connect or disconnect devices, then press Enter.

 / Config. ID   OS Type  Description                     Defined
 _ OPSYS01      MVS      MVS or z/OS operating system    Yes
 ****************************** Bottom of data ******************************

F1=Help        F2=Split       F3=Exit        F4=Prompt      F5=Reset
F7=Backward    F8=Forward     F9=Swap       F12=Cancel     F22=Command
```

Figure 112. Change Device Group / Operating System Configuration

HCD applies the OS related changes to all selected devices, if a user performs an explicit action (for example, ***Select (connect/change)*** or ***Disconnect from OS***, see next step). You might need to also disconnect from those operating systems, which are not shown as connected (status is shown only for the first device) to ensure, that all selected devices are disconnected.

2. If you want to disconnect the selected device group(s) from specific operating systems, select those operating systems and action ***Disconnect from OS*** (action code **n**) from the context menu.

   Otherwise, select the operating system to which you want to attach the group of devices and the ***Select (connect/change)*** action from the context menu (or action code **s**). HCD displays the following dialog:

```
            Define Device Group Parameters / Features
                                                          Row 1 of 4
Command ===> ___________________________________________ Scroll ===> PAGE

Specify or revise the values below.

Configuration ID . : OPSYS01      MVS or z/OS operating System

Parameter/
Feature     Value    P Req.  Description
ADAPTER     TYPE7    + Yes   Channel adapter type
OFFLINE     No               Device considered online or offline at IPL
DYNAMIC     Yes              Device supports dynamic configuration
OWNER       VTAM     +       Subsystem or access method using the device
****************************** Bottom of data ******************************

F1=Help        F2=Split       F3=Exit        F4=Prompt      F5=Reset
F7=Backward    F8=Forward     F9=Swap       F12=Cancel     F22=Command
```

   Figure 113. Define Device Group Parameters / Features

3. You accomplish the change by accepting the default values or by changing the `Value` entries and pressing the Enter key.

The specified device parameters/features are applied to all devices of the group.

Changing the DYNAMIC, LOCANY or OFFLINE parameter of a group of devices

You can change the DYNAMIC, LOCANY or OFFLINE parameter of a group of devices using the ***Attribute group change*** action. This function helps you to change parameters for a group of devices without having to use the ***Change*** action for each device individually.

This function can only be invoked from the I/O Device List accessible from the Operating System Configuration List.

1. On the ***Primary Task Selection*** panel, select ***Define, modify, or view configuration data*** and on the resulting panel the object ***Operating system configurations***.
2. Select an operating system and select the ***Work with attached Devices*** action from the context menu (or action code **u**). HCD displays the I/O Device List.
3. Select one or more devices on the I/O Device List and the ***Attribute Group change*** action from the context menu (or action code **e**). HCD displays the Attribute Group Change panel:

```
Attribute Group Change


For all devices in the selected group, choose whether ...

__  1.  Allow dynamic configuration ........... DYNAMIC=YES
    2.  Do not allow dynamic configuration .... DYNAMIC=NO
    3.  UCB can reside in 31 bit storage ...... LOCANY=YES
    4.  UCB can not reside in 31 bit storage .. LOCANY=NO
    5.  Device is set offline at IPL .......... OFFLINE=YES
    6.  Device is set online at IPL ........... OFFLINE=NO
```

   Figure 114. Attribute Group Change

Select the appropriate parameter.

HCD only changes the single parameter for all devices of the group, leaving the other parameters/features of the group unchanged.

Changing type/model of a group of devices

You can change the type or model for a group of devices using the ***Device type group change*** action. However, you have to make sure that all devices to be changed in one step have the same device type and model. The control units the devices are attached to, have to support the attachment of the new device type as well, and required parameters have to be identical. The new device type has to be supported by the same operating system type.

1. Select one or more devices on the I/O Device List.
2. Use the ***Device type group change*** action from the context menu (or action code **t**). HCD displays the Device Type Group Change panel.

```
            Device Type Group Change


 Specify a new device type-model.

 Current device type-model  . : 3380

 New device type-model  . . . . 3390_________  +
```

Figure 115. Device Type Group Change

Specify a new device type-model.

Changing the subchannel set placement for a group of devices

You can change the placement of PAV alias devices any time, for example, if you want to migrate PAV alias devices into a subchannel set of a new processor. From the I/O Device List showing device groups or single devices, use action ***Subchannel Set ID group change*** from the context menu (or action code **m**). HCD displays the following dialog where you can specify the new ID of the subchannel set.

Note: When defining or changing the subchannel set placement for devices, you need to observe certain rules. For more information, read "Defining CSS-related definitions for a device" on page 122 and refer to the *z/OS HCD Planning*.

```
                    Specify Subchannel Set ID


 Specify the ID of the subchannel set into which devices are
 placed, then press Enter.

 Subchannel Set ID    1  +



  F1=Help    F2=Split   F3=Exit    F4=Prompt  F5=Reset   F9=Swap
 F12=Cancel
```

Figure 116. Specify Subchannel Set ID

If at least one of the selected devices has a connection defined to a processor supporting multiple subchannel sets, HCD displays a dialog where you can select from the eligible channel subsystems where to move the devices.

```
                Eligible Channel Subsystems
CBDPUTPC                                  Row 1 of 3
Command ===> _________________ Scroll ===> CSR

Select all channel subsystems for which the
subchannel set ID has to be changed for all
selected devices that have a connection to them.


/ Proc.CSSID  Description
_ MSSPROC1.0  CSS0 of MSSPROC1
_ TSPROC1.0   CSS0 of TSPROC1
_ TSPROC1.1   CSS1 of TSPROC1
**************** Bottom of data *****************


 F1=Help         F2=Split        F3=Exit
 F7=Backward     F8=Forward      F9=Swap
F12=Cancel      F22=Command
```

Figure 117. Eligible Channel Subsystems

Also, if at least one of the selected devices has a connection defined to an operating system configuration, HCD displays a dialog listing all OS configurations that have connections to any of the selected devices. You can select all OS configurations for which you want to change the subchannel set ID for the selected devices.

```
                 Eligible Operating System Configurations
CBDPUTOC                                                   Row 1 of 1
Command ===> ____________________________________ Scroll ===> CSR

Select all operating system configurations for which the subchannel
set ID has to be changed for all selected devices that have a
connection to them.


/ Config.ID    Type             Description
_ ZOS17        MVS              first z/OS 1.7 operating system
_ Z17SCND      MVS              second z/OS 1.7 operating system
************************* Bottom of data **************************


 F1=Help       F2=Split      F3=Exit       F7=Backward   F8=Forward
 F9=Swap      F12=Cancel    F22=Command
```

Figure 118. Eligible Operating System Configurations

Changing the device number

To change the number of a device:

1. Remove the connections to the control units for the devices to be changed as follows:
   a. On the I/O Device List, select the devices to be changed and the ***CSS group change*** action from the context menu (or action code g). The Change Device Group panel is displayed.
   b. Remove the control unit numbers from the panel and press the Enter key.
2. On the I/O Device List, select the device and the ***Add like*** action from the context menu (or action code a). The Add Device panel is displayed.
3. Specify the new number for the device and the control unit numbers to which the devices are to be attached. Press the Enter key. HCD now displays a series of panels showing the settings of the previously selected device (the one to be changed). The settings are propagated to the new devices. Press the Enter key until HCD redisplays the I/O Device List now showing the new device.
4. Delete the old device by selecting the device and selecting the ***Delete*** action from the context menu (or action code d).

Disconnecting devices from an operating system

Perform the following steps to disconnect a device from an operating system.

1. On the I/O Device List select a device and the ***Change*** action from the context menu (or action code c).
2. On the ***Change Device Definition*** panel, press the Enter key.
3. On the ***Device / Processor Definition*** panel, press the Enter key once again. HCD displays the ***Define Device to Operating System Configuration*** panel.

```
         Define Device to Operating System Configuration
                                                            Row 1 of 4
Command ===> _____________________________________ Scroll ===> CSR

Select OSs to connect or disconnect devices, then press Enter.

Device number  . : 0054           Number of devices  : 1
Device type  . . : 3390A

Subchannel Sets used in processor configurations  : 1,3

/ Config. ID   Type     SS Description                      Defined
_ MVS          MVS      3                                   Yes
_ MVS1         MVS      1                                   Yes
_ VM           VM
_ VM1          VM
************************** Bottom of data ***************************



 F1=Help       F2=Split      F3=Exit       F4=Prompt     F5=Reset
 F6=Previous   F7=Backward   F8=Forward    F9=Swap      F12=Cancel
F22=Command
```

Figure 119. Define Device to Operating System Configuration

4. On the Define Device to Operating System Configuration panel select an operating system and the ***Disconnect from OS*** action from the context menu (or action code n). The Define Device to Operating System Configuration panel is displayed again without showing a `Yes` in the `Defined` column.

Disconnecting multiple devices from an operating system:

If you want to disconnect multiple devices from one operating system in one step, open the I/O device list via the OS configuration list. On the I/O Device List, select one or multiple devices and use ***Disconnect from OS*** action from the context menu (or action code n).

Showing or hiding parameter/feature definitions of devices

You can define up to five parameters/features for a device that can be shown on the I/O Device List in addition to the default information. These parameters/features will be retained across sessions.

1. On the Operating System Configuration List, use the ***Work with attached devices*** action from the context menu (or action code u).
2. On the following I/O Device List, select the ***Show parameters/features*** pull-down choice from the ***Show/Hide*** action bar (no action code available).
3. On the following Device Parameters/Features Profile, you can specify up to five parameters/features that will be displayed on the I/O Device List. HCD saves your settings across sessions.

```
                  Device Parameters / Features Profile


Specify or revise the device parameters or features to be displayed in the
I/O Device List for an operating system configuration.

Parameters/
features . . LIBRARY     SHARED      OFFLINE     __________  __________  +

 F1=Help   F2=Split   F3=Exit   F4=Prompt   F5=Reset   F9=Swap   F12=Cancel
```

Figure 120. Device Parameters / Features Profile

4. On the I/O Device List, use the F20=Right key to scroll to the rightmost part of the panel, where the information is displayed. Note that the DYNAMIC parameter and LOCANY parameter are default information that is also shown on the leftmost part of the I/O Device List in columns **D** and **L**.

```
  Goto  Show/Hide  Filter  Backup  Query  Help
-------------------------------------------------------------------------
                                I/O Device List       Row 1 of 11 More: <

Select one or more devices, then press Enter. To add, use F11.

Configuration ID . . : OPSYS01      MVS or z/OS operating system

  ---------Device-------
/ Number   Type          LIBRARY    SHARED     OFFLINE
_ 0001     3278-3                              No
_ 0098     9033                                Yes
_ 00C1     3480          No                    No
_ 01D1     3390                     No         No
_ 01D2     3390                     No         No
_ 01D3     3390                     No         No
_ 01D4     3390                     No         No
_ 01D5     3390                     No         No
_ 01D6     3390                     No         No
_ 01D7     3390                     No         No
_ 01D8     3390                     No         No
```

Figure 121. I/O Device List

You can filter the shown devices by device parameters and features using the ***Set Filter*** function. On the Filter I/O Device List, you can specify a value for any displayed parameter/feature you want to use for filtering.

In case you no longer need the parameters/features to be displayed, you use ***Hide device parameters/features*** pull-down choice from the ***Show/Hide*** action bar on the I/O Device List.

Deleting devices

You can delete the definition of a device or a device group using the ***Delete*** action from the context menu (or action code d). If you delete a device, all connections to the operating system including esoterics and EDTs are also deleted.

Working with operating system consoles

The following procedure describes how to specify which devices MVS can use as NIP consoles and which devices VM can use as VM consoles. Before you can define consoles you must have defined these I/O devices to the operating system.

1. On the ***Primary Task Selection*** panel, select ***Define, modify, or view configuration data*** and on the resulting panel the object ***Operating system configurations***. HCD displays the Operating System Configuration List showing all OS configurations currently defined in the IODF.
2. Select an OS configuration and the ***Work with consoles*** action from the context menu (or action code n). HCD displays the NIP Console List or VM Console List (depending on the type of the selected operating system).

```
                 NIP Console List
  Goto  Backup  Query  Help
------------------------------------------------------------------------
                                                                Row 1 of 1

Select one or more consoles, then press Enter. To add, use F11.

Configuration ID . : OPSYS01      MVS or z/OS operating system

/ Order   Device  Device Type
  Number  Number
_   1     0001    3278-3
*************************** BOTTOM OF DATA ****************************
```

Figure 122. NIP Console List

3. Use F11=Add to define each console. The following panel is displayed:

```
              Add NIP Console

Specify the following values.

Device number of console . . . . . . ____

Order number . . . . . . . . . . . . 1
```

Figure 123. Add NIP Console

The order number is the sequence the consoles are used by the operating system.

Changing operating system consoles

You can change the order number of an operating system console by just typing over the corresponding column or by using the ***Change*** action from the context menu (or action code c) on the Console List.

Deleting operating system consoles

You can delete the definition of an operating system console using the ***Delete*** action from the context menu (or action code d) on the Console List. The devices are not deleted.

Working on IODFs enabled for multi-user access

When multiple users concurrently use the same IODF, a user's changes are not immediately refreshed in the views of the other users. However, each user has a consistent view of the data either from the initial access to the IODF or after each last update that he had applied to the IODF.

In a few scenarios, this information unit demonstrates how HCD applies these rules when two users, ***UserA*** and ***UserB*** concurrently view or update an IODF:

- “Simultaneously updating and viewing an IODF” on page 133
- “Concurrently updating an IODF” on page 134
- “Immediately reflecting changes during concurrent updates” on page 135.

Simultaneously updating and viewing an IODF

Imagine that both users ***UserA*** and ***UserB*** invoke the ***Channel Subsystem List*** of the same IODF. ***UserA*** wants to delete channel subsystems CSS 1 and CSS 3, and ***UserB*** wants to work with the partitions of CSS 1.

```
                    UserA:                    |                    UserB:
                                              |
            Channel Subsystem List            |            Channel Subsystem List
                                              |
  Processor ID . . . : BBBX                   |  Processor ID . . . : BBBX
                                              |
    CSS Devices in SS0    Devices in SS1      |    CSS Devices in SS0    Devices in SS1
  / ID  Maximum + Actual  Maximum + Actual    |  / ID  Maximum + Actual  Maximum + Actual
                                              |
  _ 0   65280     28      65535     0         |  _ 0   65280     28      65535     0
  d 1   65280     28      65535     0         |  p 1   65280     28      65535     0
  _ 2   65280     0       65535     0         |  _ 2   65280     0       65535     0
  d 3   65280     0       65535     0         |  _ 3   65280     0       65535     0
```

Figure 124. Simultaneously updated and wiving an IODF

Both users press Enter. While ***UserA*** sees the updated ***Channel Subsystem List***, ***UserB*** sees the partitions of the meanwhile deleted CSS 1, because he still views the state of the IODF as loaded from storage. He will get a refreshed view after applying an update on the IODF.

```
                    UserA:                    |                    UserB:
                                              |
            Channel Subsystem List            |                Partition List
                                              |
  Processor ID . . . : BBBX                   | Processor ID  . . . . : BBBX
                                              | Configuration mode  . : LPAR
    CSS Devices in SS0    Devices in SS1      | Channel Subsystem ID  : 1
  / ID  Maximum + Actual  Maximum + Actual    |
                                              | / Partition Name   Number Usage
  _ 0   65280     28      65535     0         | _ PART11           1      CF/OS
  _ 2   65280     0       65535     0         | _ PART12           2      CF/OS
                                              | _ PART13           3      CF/OS
```

Figure 125. Simultaneously updated and wiving an IODF

Concurrently updating an IODF

Both users ***UserA*** and ***UserB*** start on the ***Channel Subsystem List*** of the same IODF. ***UserA*** invokes action ***Change*** on CSS 1 and ***UserB*** updates ***Maximum Devices in SS0*** for CSS2 and CSS3 from 65280 to 64512 and additionally invokes action ***Delete*** on the same CSS 1 maybe a few seconds later.

```
                    UserA:                    |                    UserB:
                                              |
            Channel Subsystem List            |            Channel Subsystem List
                                              |
  Processor ID . . . : BBBX                   |  Processor ID . . . : BBBX
                                              |
    CSS Devices in SS0    Devices in SS1      |    CSS Devices in SS0    Devices in SS1
  / ID  Maximum + Actual  Maximum + Actual    |  / ID  Maximum + Actual  Maximum + Actual
                                              |
  _ 0   65280     28      65535     0         |  _ 0   65280     28      65535     0
  c 1   65280     28      65535     0         |  d 1   65280     28      65535     0
  _ 2   65280     0       65535     0         |  _ 2   64512     0       65535     0
    3   65280     0       65535     0         |  _ 3   64512     0       65535     0
```

Figure 126. Concurrently updating an IODF

HCD displays panel ***Change Channel Subsystem*** for ***UserA*** while ***UserB*** receives message CBDA340I. When ***UserB*** returns from the ***Message List*** to the ***Channel Subsystem List***, the panel is not refreshed and ***UserB's*** updates are kept on the screen. Thus, ***UserB*** can retry his update request several times until ***UserA*** releases the lock on the IODF.

```
                    UserA:                          |                    UserB:
                                                    |
          Change Channel Subsystem                  |                  Message List
                                                    |
                                                    |
  Specify or revise the following values.           |  Messages are sorted by severity.
                                                    |  Select one or more, then press Enter.
  Processor ID . . . . . . : BBBX                   |
  Channel subsystem ID . . : 1                      |  / Sev Msg. ID Message Text
                                                    |  _ E CBDA340I IODF USERA.IODF00.TEST.WORK
  Description  . . . . . . . ________________       |  # is currently being updated
                                                    |  # by HCD user USERA on system
  Maximum number of devices                         |  # SCLM.
    in subchannel set 0  . . 65280  +               |
    …                                          |
```

Figure 127. Concurrently updating an IODF

Immediately reflecting changes during concurrent updates

Both users ***UserA*** and ***UserB*** start on the ***Channel Subsystem List*** of the same IODF. ***UserA*** invokes action ***Delete*** on CSS 1 and CSS 2, locking the IODF, and ***UserB*** at the same time invokes action ***Change*** on several CSSs.

```
                    UserA:                          |                    UserB:
                                                    |
            Channel Subsystem List                  |            Channel Subsystem List
                                                    |
  Processor ID . . . : BBBX                         |  Processor ID . . . : BBBX
                                                    |
    CSS Devices in SS0    Devices in SS1            |    CSS Devices in SS0    Devices in SS1
  / ID  Maximum + Actual  Maximum + Actual          |  / ID  Maximum + Actual  Maximum + Actual
                                                    |
  _ 0   65280     28      65535     0               |  _ 0   65280     28      65535     0
  d 1   65280     28      65535     0               |  c 1   65280     28      65535     0
  d 2   65280     0       65535     0               |  c 2   65280     0       65535     0
    3   65280     0       65535     0               |  c 3   65280     0       65535     0
```

Figure 128. Immediately reflecting changes during concurrent updates

Even after ***UserA*** has successfully deleted the two channel subsystems, ***UserB*** sees the ***Channel Subsystem List*** with all channel subsystems, because this is the state of the IODF as loaded from storage. Let us suppose, he wants to change channel subsystems CSS 1, CSS 2 and CSS 3. An appropriate message is displayed for each channel subsystem that is already deleted. When returning to the ***Channel Subsystem List***, ***UserB*** sees the refreshed contents of this panel.

```
                    UserA:                          |                    UserB:
                                                    |
                                                    |
            Channel Subsystem List                  |            Message List
                                                    |
  Processor ID . . . : BBBX                         |  Messages are sorted by severity.
                                                    |  Select one or more, then press Enter.
    CSS Devices in SS0    Devices in SS1            |
  / ID  Maximum + Actual  Maximum + Actual          |  / Sev Msg. ID Message Text
                                                    |  _ E CBDA188I Channel Subsystem ID 1
  _ 0   65280     28      65535     0               |  # does not exist for processor
    3   65280     0       65535     0               |    BBBX
                                                    |  _ E CBDA188I Channel Subsystem ID 2
                                                    |  # does not exist for processor
                                                    |    BBBX
```

Figure 129. Immediately reflecting changes during concurrent updates

Viewing information

HCD offers several possibilities to view information that might be helpful when defining or maintaining your configuration data.

Viewing object definitions

To view information about objects that are defined in your configuration, select the ***Define, modify, or view configuration data*** option from the ***Primary Task Selection*** panel. From the resulting panel, select the desired object to get the appropriate list, on which you can use ***Work with object*** actions from the context menu that lead to further list panels that display other related objects. You can use these panels to define, modify, and view configuration data. See Figure 42 on page 68 on how to navigate to related list panels of different objects.

Viewing full definition of an object

You can ask HCD to display, for viewing only, the full definition of an object. This might include additional information that is not displayed on the action list panel.

To view object definitions select an object on an action list and use the ***View object definition*** action (or action code **v**).

This following lists offer this possibility:

- Processor List
- PCIe Function List
- Channel Path List
- Control Unit List
- I/O Device List

Viewing additional object lists

Besides the action list panels shown in Figure 42 on page 68, there are list panels, on which you can only view information about objects without being able to change it. You can navigate to these lists using the ***View objects*** actions from the context menu. HCD offers ***View objects*** actions on the following panels:

List Panel
: **View**

Channel Path List
: Connected switches

Partition List
: Attached channel paths

: Attached control units

: Attached devices

Operating System List
: Generics

Generics List
: Devices

Esoteric List
: Devices

Graphical view

HCD offers you the possibility to view a graphical representation of the configuration.

Use the task ***Create or view graphical configuration report*** on the ***Primary Task Selection*** panel to view the entire configuration. To view objects in context of their attached objects you can also select an object from an action list panel and use the ***View graphically*** action from the context menu (or action code **h**). The following object lists support this possibility:

- Channel Path List
- Control Unit List

- I/O Device List (only for devices that connect to a control unit)
- Partition List
- Switch List

For more information on how to view a graphical report, refer to "Create or view graphical configuration reports" on page 220.

Viewing logical control units

On a Control Unit List or I/O Device List, you can display the groups of *logical control units* that HCD has created to represent the physical control units defined in a configuration. Logical control units are used by the CSS to schedule the processing of I/O requests.

Viewing coupling facility information

HCD lets you view information for a specific CF channel path. You can view, for example, access and candidate list of selected channel paths and information on the CF control units and devices in a CF channel path connection.

On the CF Channel Path Connectivity List, select a channel path and one of the following actions:

- The ***View source channel path definition*** action displays the View Channel Path Definition panel for the source channel path of the CF connection.
- The ***View destination channel path def.*** action displays the View Channel Path Definition panel for the destination path of the CF connection.
- The ***View CF control unit and devices*** action displays the View CF Control Unit and Devices panel that shows the CF control unit number(s), the starting CF device number(s), and the range of devices defined for a CF connection.

Viewing CTC connections

HCD offers you the possibility to view and verify your CTC connections. You can view existing CTC connections including online diagnostic messages on the following lists:

- Processor List
- Partition List
- Channel Path List
- Control Unit List
- I/O Device List

The ***CTC Connection List*** lets you immediately verify whether your definitions are done correctly.

FICON channel-to-channel support

A FICON CTC connection consists of two channels. The two channels can be considered as communicating directly with each other in a peer-to-peer fashion.

Each channel defines the channel at the other end of the CTC connection with the following considerations:

- Connection as an FCTC control unit.
- An FCTC connection is given via a FICON channel path on each side of the FCTC communication line.
- It is possible to have an FCTC connection between the LPARs of the same CEC via a single FICON channel path in a switched environment.

In order to be usable as an FCTC connection channel, a FICON channel path must be defined to an FCTC control unit which is connected to FCTC devices.

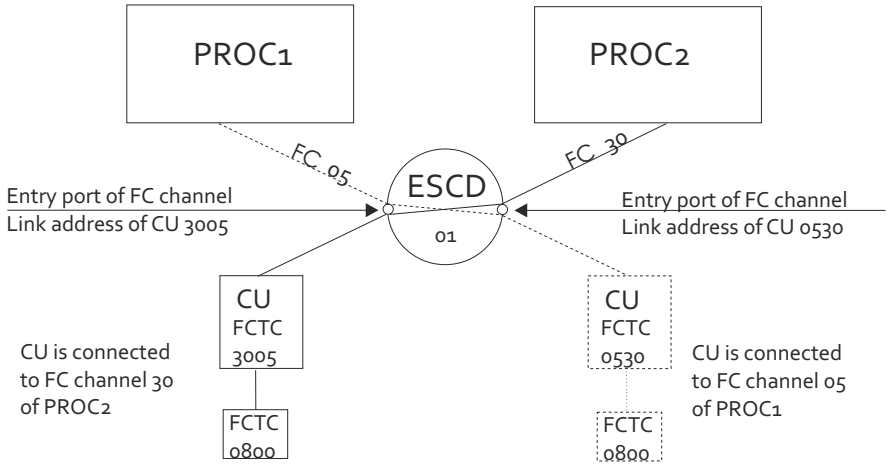

Figure 130. FICON CTC connection established using a dynamic connection

The entry port of the channel at the other end of the CTC connection corresponds to the link address of the control unit representing the channel.

The CTC devices associated with the control units at both ends of the CTC connection may have different device numbers, but they must have the same unit address. The device type of both devices must be the same (for example, FCTC).

Restrictions applying to the CTC Connection List

- HCD can only show CTC connections if the connected processors are defined in one IODF.
- CTC connections using a stand-alone CTC adapter cannot be shown.

CTC connections with shared channels

You can share your channels among several partitions to save physical connections. The following figure shows you the case when a FC channel is shared between two partitions. The CTC channel will need a separate control unit definition for each partition sharing the CNC channel. Each of these control unit definitions has the same destination link address but the control unit logical addresses (CUADD) must be different. The control unit logical address must correspond to the image number of the logical partition.

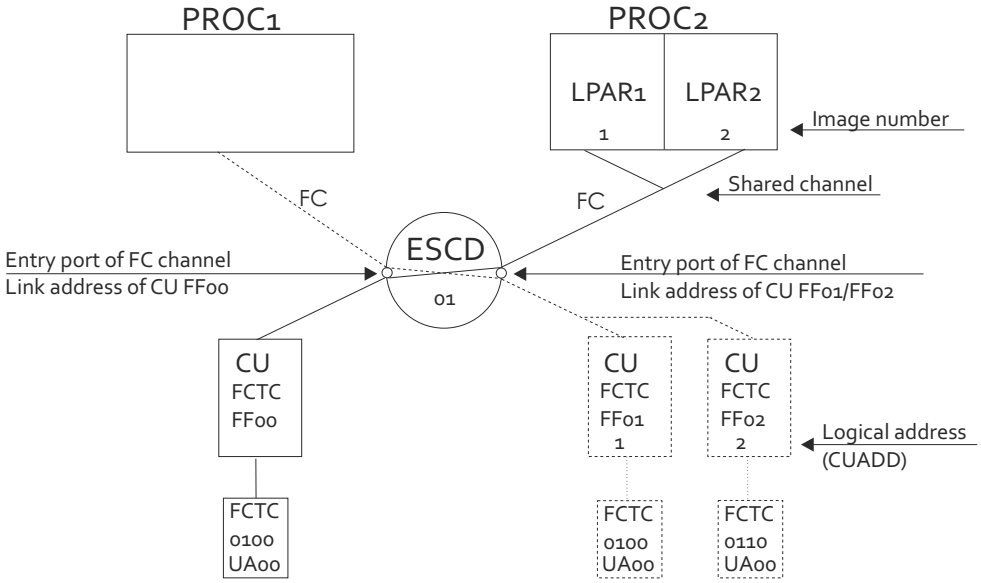

Figure 131. CTC connection established using shared channels

For further specification rules, refer to the *IOCP User's Guide* for your processor.

Point-to-point CTC connection

Each point-to-point CTC connection is realized by a cable plugged into the ends of the connection (imagine, the connecting cable has a serial number). In addition the control unit and device definitions must match the desired CTC connection – similar to the switched connection (CUADD on one side must match the partition image number on the other side, the explicit device candidate list must allow the LPAR of the same side to use the device.

To verify and report point-to-point CTC connections, HCD uses serial numbers. To find the both ends of the connection, all control units connected to the chpids must have the same serial numbers.

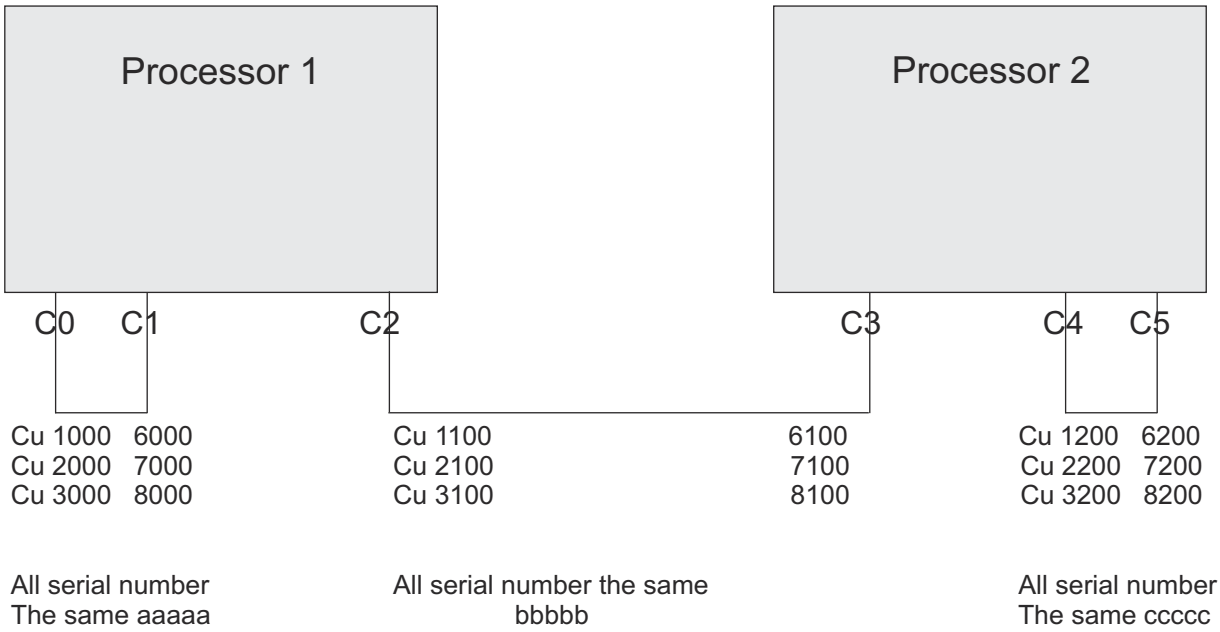

Figure 132. CTC connection established using point-to-point

How to view CTC connections

You can use action ***View related CTC connections*** (or action code **k**) on the following lists:

- Processor List
- Partition List
- Channel Path List
- Control Unit List
- I/O Device List

A panel similar to the following one is displayed:

```
  Goto  Filter  Backup  Query  Help
--------------------------------------------------------------------------------
                             CTC Connection List     Row 1 of 14 More:       >

Select CTC connections to view CTC Messages, then press Enter.

  -----------CTC or FC side---------- ---------CNC/FCV or FC side--------
/ Proc.CSSID Part.    Devices CH CU   Proc.CSSID Part.    Devices CH CU   Msg.

_ PROC001A            0500,5  20 1020 PROC001             0100,5  10 1010 G750
_ PROC001A            0690,1  20 0069                                     G752
_ PROC002             0650,1  11 0065 PROC002             0660,1  13 0066 G753
_ PROC002             0680,1  11 0068                                     G752
_ PROC002             0701,1  12 0050 PROC003    PART1    0301,1  10 1012
_ PROC002             0800,5  22 0060 PROC003    PART2    0400,5  11 1013
_ PROC002             0805,1  22 0060 PROC003    PART2    0405,1  11 1013 G751
_ PROC002             0806,3  22 0060 PROC003    PART2    0406,3  11 1013
_ PROC002             2400,1  24 0024                                     G756
_ XMP1.1     PART1    1105,1  21 0105 PROC001             1106,1  10 0106
_ XMP1.1     PART1    1107,1  21 0107 PROC002             1108,1  26 0108 G750
                                      PROC002             0200,2  10 1011 G757
                                      XMP1.1     PART1    0300,1  10 1012 G754
                                      XMP1.1     PART2    0300,2  10 1012 G754
```

Figure 133. CTC Connection List

This panel shows the definitions of the CNC/FCV side in relation to the definitions of the CTC side, such as processor, partition, channel path, control unit, and device information.

Incomplete CTC definitions

If the CTC connection is not correctly defined, the fields on the CTC Connection List can be incomplete and an error message is shown. For example, G754 in column Msg. refers to message CBDG754I, which indicates that HCD cannot determine the connection, because no control units and devices match to the processor, partition, control unit, and device of the same row.

Displaying more detailed information

Scroll to the right to see more detailed information about the CTC side of the connection, such as channel path mode, switch information, detailed control unit and device information.

```
  Goto  Filter  Backup  Query  Help
--------------------------------------------------------------------------
                       CTC Connection List (CTC/FC)     Row 1 of 14 More: <>

Select CTC connections to view CTC Messages, then press Enter.

             -Partition-- ----Devices-----    -CHPID- Entry Dyn      Link CU
/ Proc.CSSID Name     Num Number   Type OS UA ID Mode SW PO SW  CU   Addr ADD
_ PROC001A                0500,5   BCTC N  00 20 DED  05 F0 05  1020 E120
_ PROC001A                0690,1   SCTC N  00 20 DED  05 F0 05  0069 E728
_ PROC002                 0650,1   SCTC N  00 11 DED  05 E7 05  0065 E840
_ PROC002                 0680,1   SCTC N  00 11 DED  05 E7 05  0068 F0
_ PROC002                 0701,1   SCTC N  01 12 DED  05 D0 05  0050 F4   1
_ PROC002                 0800,5   SCTC N  00 22 DED  05 D7 05  0060 F3   2
_ PROC002                 0805,1   BCTC N  05 22 DED  05 D7 05  0060 F3   2
_ PROC002                 0806,3   SCTC N  06 22 DED  05 D7 05  0060 F3   2
_ PROC002                 2400,1   SCTC N  00 24 DED  04 E0 05  0024 E0
_ XMP1.1     PART1      1 1105,1   SCTC N  00 21 DED  05 F7 05  0105 E1
_ XMP1.1     PART2      2 1107,1   SCTC N  00 21 DED  05 F7 05  0107 F8
```

Figure 134. CTC Connection List (CTC/FC)

Scroll once again to the right to see the same detailed information for the CNC/FCV side of the connection.

```
  Goto  Filter  Backup  Query  Help
------------------------------------------------------------------------------
                       CTC Connection List (CNC/FCV/FC)     Row 1 of 14 More: <

Select CTC connections to view CTC Messages, then press Enter.

             -Partition-- ----Devices-----    -CHPID- Entry Dyn      Link CU
/ Proc.CSSID Name     Num Number   Type OS UA ID Mode SW PO SW  CU   Addr ADD

_ PROC001                 0100,5   BCTC N  00 10 DED  05 E1 05  1010 F0   0
_
_ PROC002                 0660,1   SCTC N  00 13 DED  05 E8 05  0066 E7
_
_ XMP1.1     PART1      1 0301,1   SCTC N  01 10 SHR  05 F4 05  1012 D0
_ XMP1.1     PART2      2 0400,5   SCTC N  00 11 SHR  05 F3 05  1013 D7
_ XMP1.1     PART2      2 0405,1   SCTC N  05 11 SHR  05 F3 05  1013 D7
_ XMP1.1     PART2      2 0406,3   SCTC N  06 11 SHR  05 F3 05  1013 D7
_
_ PROC001                 1106,1   SCTC N  00 10 DED  05 E1 05  0106 F7
_ PROC002                 1108,1   SCTC N  00 26 DED  05 F8 05  0108 F7   1
_ PROC002                 0200,2   SCTC N  00 10 DED            1011 C5
_ XMP1.1     PART1      1 0300,1   SCTC N  00 10 SHR  05 F4 05  1012 D0
_ XMP1.1     PART2      2 0300,2   SCTC N  00 10 SHR  05 F4 05  1012 D0
```

Figure 135. CTC Connection List (CNC/FCV/FC)

Filtering CTC definitions

To get a better overview of your CTC connections you can filter the list by specifying different filter criteria. Select action bar ***Filter*** and then ***Set filter***. The following panel appears:

```
                     Filter CTC Connections


 Specify or revise the following filter criteria and press Enter.

 Message ID  . . . . _____
 Device type . . . . ____  (SCTC/BCTC/FCTC)
 Dynamic switch  . . __  +

 CTC or FC side                      CNC/FCV or FC side
 Processor.CSSID . . __________  +   Processor.CSSID . . __________  +
 Partition . . . . . ________    +   Partition . . . . . ________    +
 CHPID . . . . . . . __              CHPID . . . . . . . __

 CU number . . . . . ____          CU number . . . . . ____
 Starting device no. ____          Starting device no. ____
 Defined to OS . . . _  (Y/N)      Defined to OS . . . _  (Y/N)
```

Figure 136. Filter CTC Connections

Printing CTC connection lists

You can also print the list panel using the SAVE command as described in “How to print list panels” on page 226.

Displaying diagnostic messages

For each connection, HCD displays one message, even if the connection includes several errors. HCD displays the messages according to the following priority list:

1. CBDG750I
Logical address (CUADD) is specified for CU @1, but CHPID @2 of processor @3 is not defined as shared.

2. CBDG751I
Device type of device @1 connected to processor @2, CHPID @3 does not match with device type of device @4 on the other side.

3. CBDG752I
Channel path type error. CHPID @1 of processor @2 is connected to a CHPID @3 of processor @4 with the same type.

4. CBDG753I
Wrap around connection detected for processor @1 (partition @2) via CHPID @3 and CHPID @4.

A message list may look as follows. The messages are sorted by severity.

```
  Save  Query  Help
-------------------------------------------------------------------------
                               Message List                     Row 1 of11
Command ===> ___________________________________________ Scroll ===> PAGE

Messages are sorted by severity. Select one or more, then press Enter.

/ Sev Msg. ID  Message Text
_ E   CBDG750I Logical address (CUADD) is specified for CU 1010,
#              but CHPID 20 of processor PROC001A is not defined as
#              shared.
_ E   CBDG752I Channel path type error. CHPID 20 of processor PROC001A
#              is connected to CHPID 11 of processor PROC002 with the
#              same type.
_ W   CBDG753I Wrap around connection detected for processor PROC002
#              (partition - none -) via CHPID 11 and CHPID 13.
_ I   CBDG756I HCD cannot determine connection. CHPID 24 of processor
#              PROC002 is connected via chained switches.
```

Figure 137. Message List

Chapter 7. How to work with switches

Overview

This information unit explains:

- The possibility of switch connections
- The advantages when you define switches with HCD
- How to work with switches (defining, changing, deleting)
- How to work with connections to switches (channel paths, control units, actions on the Port List)
- How to work with switch configuration data (defining, changing, deleting)
- How to migrate, activate, and save switch configuration data

You can define switches, switch connections and how the switches are physically cabled. A switch configuration, also called port matrix, defines how the various ports of the switch connect to each other. For example, the switch configuration defines whether a port is blocked, has a dedicated connection to another port, or whether dynamic connections to other ports are allowed or prohibited. In other words, the switch configuration defines the inside of a switch.

Possibilities of switch connections

FICON switches allow the definition of dynamic connections.

HCD supports fabrics containing cascade switching using FICON switches. Such a fabric consists of two or more FICON switches.

Note: For FICON connections, the dynamic switch ID is always the channel path entry switch.

The following four figures illustrate the path types of switch connections for FICON switches. For FICON switches, only the first and the fourth configuration type is supported. Figure 138 on page 143 shows a configuration with a single switch; the entry switch is the dynamic switch. (The dynamic switch in HCD corresponds to the SWITCH keyword of the CHPID macroinstruction from the IOCP point of view.)

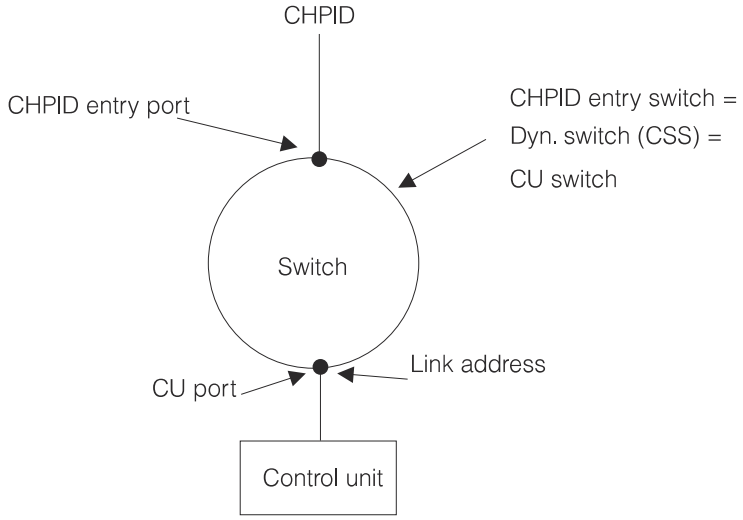

Figure 138. Configuration with one switch

Figure 139 on page 144 shows a configuration with two switches, where the entry switch is different from the dynamic switch. (The two switches are chained and the entry switch for the channel path has a dedicated connection.)

© Copyright IBM Corp. 1994, 2022

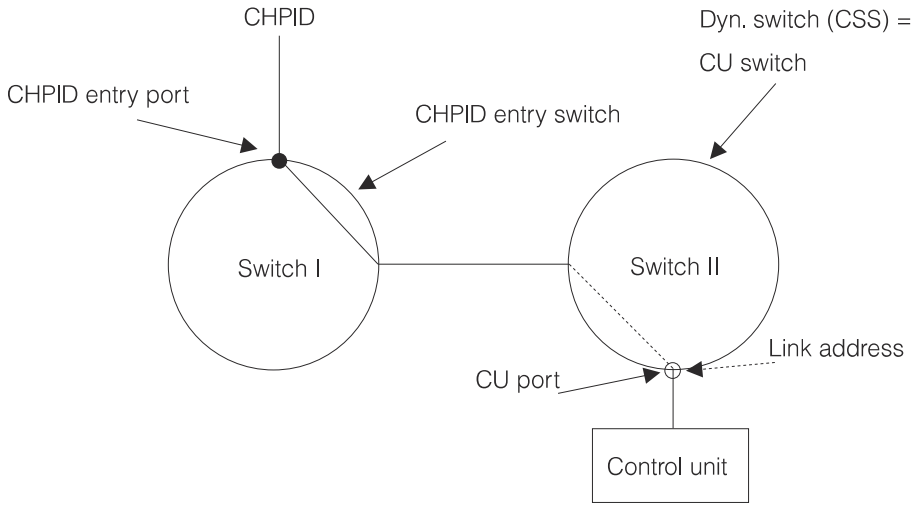

Figure 139. Configuration with two switches (1)

Figure 140 on page 144 shows a configuration with two switches, where the entry switch is the same as the dynamic switch. (The two switches are chained and the CU switch has a dedicated connection.)

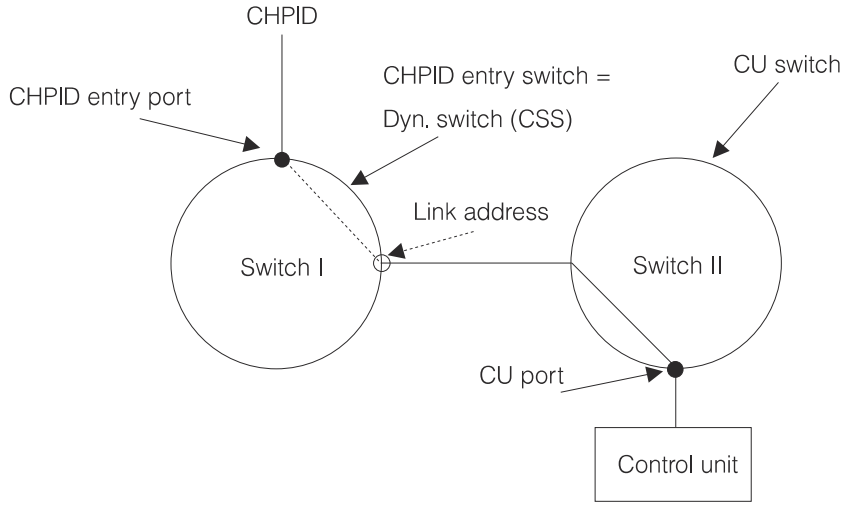

Figure 140. Configuration with two switches (2)

Figure 141 on page 145 shows a configuration with cascading switches. The fabric in this figure contains two cascading FICON switches. The link address 5904 specifies 59 as switch address and 04 as port address.

Note:

The switch address is unique within a fabric, but may occur also in other cascaded switch fabrics. However, as HCD has no knowledge of which switches are within the same fabric, it is highly recommended to assign unique switch addresses across fabrics, for example, by using the switch IDs as switch addresses.

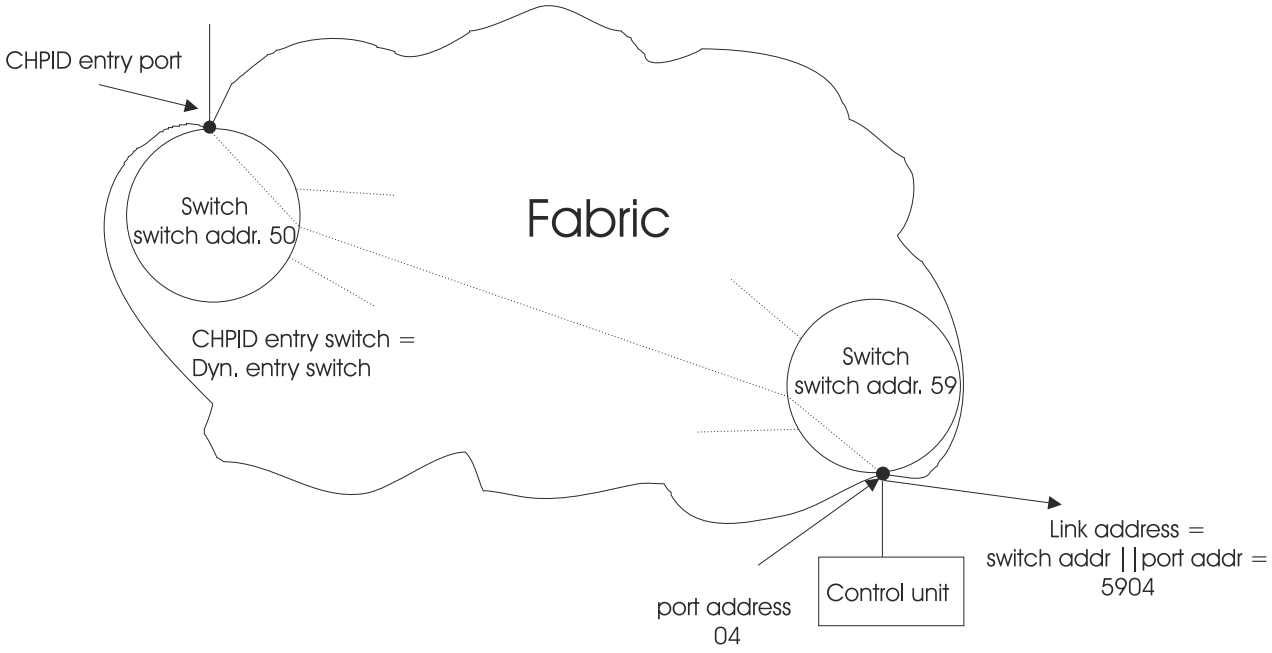

Figure 141. Configuration with two cascading FICON switches

Advantages of switch definitions with HCD

You have the following advantages when you define switches with HCD:

- More rigorous validation of the configuration definition.

  If all switches between the channels and control units are defined, HCD can determine whether a valid path exists between the processor and control unit. For example, HCD can validate that the destination link address specified for a channel path is a valid port on the dynamic switch.
- The possibility to define several switch configurations for each switch.
- Graphical configuration reports include switch connections.

Note: HCD supports a generic FICON switch (type FCS) supporting port addresses 00 to FF. This switch type does not support a switch control unit and switch device.

Defining switches

To define switches and their associated ports, you need to

- define switch characteristics,
- define connections to channel paths, control units, and other switches,
- define switch configuration data (port matrix).

Working with switches

In this section, you can learn how to define, change, prime, and delete switches.

Defining switch characteristics

1. On the ***Primary Task Selection*** panel, select ***Define, modify, or view configuration data*** and on the resulting panel the object ***Switches***. HCD displays the list of all switches currently defined in the IODF.

```
  Goto  Filter  Backup  Query  Help
 ------------------------------------------------------------------------------
                                Switch List          Row 1 of 6 More:       >
 Command ===> ___________________________________________________ Scroll ===> PAGE

 Select one or more switches, then press Enter. To add, use F11.


                                                                   CU   Dev
 / ID Type +        Ad Serial-# + Description                      Num. Num.
 _ 01 2032          21 10145      Switch 01                        0701 0701 >
 _ AA 9032          __ 10146      Switch AA                        001A 001A >
 _ AB 9032          __ 10147      Switch AB                        001B 001B >
 _ AC 9032          __ 10678      Switch AC                        001C 001C
 _ AD 9032          __ 10679      Switch AD                        001D 001D
 _ AE 9032-3        __ 20995      Switch AE                        001E 001E
 ****************************** Bottom of data ********************************


 F1=Help      F2=Split     F3=Exit      F4=Prompt    F5=Reset     F7=Back
 F8=Forward   F9=Swap     F10=Actions  F11=Add      F12=Cancel   F13=Inst
F20=Right    F22=Command
```

Figure 142. Switch List (left part)

The Switch List (left part), Figure 142 on page 146, lists one switch control unit and device. If there is more than one switch control unit and device, the list entry gets an indication ('>'). With the F20=Right key, you can scroll to the right part of the Switch List. Up to five switch control units and devices can be shown. If there are more, an indication is given for the corresponding entry ('Yes' in column 'More?' on the right part of the Switch List). These additional switch control units and devices can be viewed, for example, on the Port List for port FE.

```
  Goto  Filter  Backup  Query  Help
 ------------------------------------------------------------------------------
                                Switch List                        Row 1 of 6
 Command ===> ___________________________________________ Scroll ===> PAGE  <

 Select one or more switches, then press Enter. To add, use F11.

                    CU   Dev   CU   Dev   CU   Dev   CU   Dev   CU   Dev   More?
 / ID Type +        #1   #1    #2   #2    #3   #3    #4   #4    #5   #5
 ------------------------------------------------------------------------------
 _ 01 2032          0701 0701  0702 0702  0703 0703  0704 0704  0705 0705  Yes
 _ AA 9032          001A 001A  002A 002A  003A 003A
 _ AB 9032          001B 001B  002B 002B  003B 003B
 _ AC 9032          001C 001C
 _ AD 9032          001D 001D
 _ AE 9032-3        001E 001E
 ****************************** Bottom of data ********************************


   F1=Help      F2=Split     F3=Exit      F4=Prompt    F5=Reset     F7=Backward
   F8=Forward   F9=Swap     F10=Actions  F11=Add      F12=Cancel   F13=Instruct
 F19=Left     F22=Command
```

Figure 143. Switch List (right part)

2. Use the F11=Add key to add a new switch.

```
Add Switch


Specify or revise the following values.

Switch ID . . . . . 99  (00-FF)
Switch type . . . . . 9032           +
Serial number . . . . . ASW3333333
Description . . . . . First Switch____________________
Switch address  . . . . . __  (00-FF) for a FICON switch

Specify the port range to be installed only if a larger range
than the minimum is desired.

Installed port range  . . C0  -  FB  +

Specify either numbers of existing control unit and device, or
numbers for new control unit(s) and device(s) to be added.

Switch CU number(s) . . . 0099  ____  ____  ____  ____  +
Switch device number(s) . 0099  ____  ____  ____  ____

F1=Help    F2=Split   F3=Exit    F4=Prompt  F5=Reset   F9=Swap
F12=Cancel
```

Figure 144. Add Switch

HCD allows you to specify the port range of a switch to be set to installed, if more ports are to be used than the minimum range. Specify the first and last port of the range you want to use. If you do not specify values for the Installed port range field, the hardware status of the minimum range of supported ports is set to installed.

In order to allow consistency checks for the configuration, when adding a new switch, you can optionally define a switch address for a FICON switch.

You can also specify control unit numbers and device numbers for the switch.

On the Add Switch panel you can initially define up to five switch control units and devices for the switch. To define more than five switch control units and devices, or to add additional switch control units and devices later, you must use the control unit and device definition dialogs.

If you specify switch control units that do not yet exist, they are automatically added as new objects to the IODF, and are connected to the switch through the switch control unit port. In this case, you need to specify new switch devices. The switch devices are also automatically added as new objects to the IODF and connected to the switch through the switch control units. However, to complete the configuration path, you must attach the switch control units and switch devices to a processor, and then you can assign the switch devices to an operating system.

If the switch control units already exist, they are automatically connected to the control unit port on the newly defined switch. In this case, you do not need to specify switch devices. If you do, the switch devices must already exist and be attached to the designated switch control units.

Specified serial numbers or descriptions are also copied to the switch control units and switch device definitions.

3. After you press the Enter key, HCD displays the updated Switch List.
   - Connect the switch control units to the processor (which also connects the switch devices to the processor). To specify additional parameters use the ***Change*** action on the Control Unit List. For details, see “Defining processor attachment data” on page 114.
   - Connect the switch devices to the operating system. Use the ***Change*** action on the I/O Device List. For details, see “Changing devices” on page 126.

Changing switch data

To change the following switch characteristics, you can type over the columns on the Switch List, or you can use the ***Change*** action from the context menu (or action code **C**) on the Switch List:

- Switch type
- Serial number and description

When you change the type, serial number, or description of the switch, the control units, and devices attached to the switch are also updated.

```
                 Change Switch Definition


 Specify or revise the following values.

 Switch ID  . . . . . . . . . : 01
 Switch type  . . . . . . . . . 2032           +
 Switch address . . . . . . . . 21             +

 Serial number  . . . . . . . . 10145       +
 Description  . . . . . . . . . Switch 01

  F1=Help    F2=Split   F3=Exit    F4=Prompt  F5=Reset   F9=Swap
  F12=Cancel
```

Figure 145. Change Switch Definition

Moving ports

When selecting ***Move Ports***, HCD offers the possibility of moving control unit, channel path or switch port connections on the same switch or from other switches to the selected target switch.

To perform this action, select the target switch for a port move action on the Switch List (see Figure 142 on page 146). The panel Actions on selected switches appears and the action ***Move Ports*** can be selected. You can also reach this panel directly by typing in the action code **X** next to the appropriate switch in the Switch List menu. This brings up the following panel Move Ports to a Target Switch.

```
                       Move Ports to a Target Switch
                                                              Row 1 of 256
 Command ===> ___________________________________________ Scroll ===> PAGE

 Specify ports to be moved to the specified target.

 ------- Source -------  ---- Target ----
          Port Range            Starting
 Switch + Start + End +  Switch  Port +
 --       --      --     AA      --
 --       --      --     AA      --
 --       --      --     AA      --
 --       --      --     AA      --
 --       --      --     AA      --
 --       --      --     AA      --
 --       --      --     AA      --
 --       --      --     AA      --
 --       --      --     AA      --
 --       --      --     AA      --
 --       --      --     AA      --
 --       --      --     AA      --

  F1=Help        F2=Split       F3=Exit        F4=Prompt       F5=Reset
  F7=Backward    F8=Forward     F9=Swap       F12=Cancel      F22=Command
```

Figure 146. Move Ports to a Target Switch

This panel contains data entry fields for the ports to be moved. It is also possible to move a range of ports from a switch to the target switch occupying subsequent port addresses starting with the target port address specified. The target switch field in this panel has been preset and cannot be changed.

Depending on the context, HCD performs the following as part of the ***Move Ports*** action:

- Copies the attributes of the source port to the target port (and set the target port to installed, if necessary).
- Disconnects all source ports from the connected units.
- Connects all target ports to the units previously connected to the source ports.
- Copies existing port configurations of the source port if the move is on the same switch and port configurations exist. The source port configurations will be set to default, i.e., all dynamic and dedicated connections are reset.
- Changes the dynamic switch of the connected channel path to the target switch if the source switch serves as a dynamic switch and the target switch is different from the source switch.
- Changes the link address to the target port if the source port serves as a link address to a channel path connection for a control unit and is connected to a control unit or another switch.

Note: HCD does not perform any checks on whether the user also moves implied ports as well. For example, if a channel path is moved to another switch, the control units that are connected to the channel path must also be moved. Moving a control unit may imply that connected channel paths must be moved as well. If not all implied ports are moved, the configuration may become invalid and a validation error will be shown either during the ***Move Ports*** action or later during the ***Build Production IODF*** action.

Note: If the target switch has switch configurations defined and the port move occurs between different switches, then the switch configurations must be adapted after the port move action.

The ***Move Ports*** action is especially of value when consolidating switches or installing new switches.

Deleting switches

You can delete the complete definition of a switch or switch configuration by using the ***Delete*** action from the context menu (or action code **d**) on the Switch List or Switch Configuration List. This also deletes the connections from the ports to channel paths, control units, and other switches. The link address and dynamic switch definitions for a channel path are not deleted.

The Confirm Delete Switch panel shows all the switch control units and devices that will be deleted with the switch. If you don't want them to be deleted with the switch, disconnect the control units from port FE of the switch, before you delete the switch.

```
                  Confirm Delete Switch

                                                                  Row 1
Command ===> ___________________________________________ Scroll ===> PAGE

Scroll forward to view the complete list of switches to be deleted, with
switch control units and devices where shown. Press ENTER to confirm
delete request. Press F12 to cancel delete request.

ID Type          Description                      CU Number Device Number
A1 9032                                           0001      0001
                                                  0011      0011
                                                  0111      0111
                                                  1111      1111
***************************** Bottom of data ******************************



 F1=Help        F2=Split       F3=Exit        F7=Backward    F8=Forward
 F9=Swap       F12=Cancel     F22=Command
```

Figure 147. Confirm Delete Switch

Working with connections to switches

In this section, you will learn about how to define connections to switches, for example channel paths, control units, other switches, how to prime switch port data, and what kind of additional actions is offered on the Port List.

Defining connections to switches

You can connect the following objects to a switch starting from the Switch List:

- Channel paths
- Control Units
- Other switches

You can also define connections from the objects to the switch when defining the object themselves. See Chapter 6, “How to define, modify, or view a configuration,” on page 65 for a description how to define the objects.

Connecting a channel path

The following procedure describes how to define a connection between a channel path and a switch starting from the Switch List.

1. On the Switch List, select the switch and the ***Work with ports*** action from the context menu (or action code **p**). The Port List is displayed.

   Ports which show value Y in column O indicate that they are occupied by a processor, control unit or switch that is not defined in the accessed IODF.

```
  Goto  Filter  Backup  Query  Help
------------------------------------------------------------------------------
                                Port List                          Row 1 of 61
Command ===> ___________________________________________ Scroll ===> PAGE

Select one or more ports, then press Enter.

Switch ID . . . . . . . : 99   Address :      Switch AB
Switch configuration ID : SWAB

                                   -------------Connection---------------
/ Port H Name +                       Unit ID         Unit Type         O
_ C0   Y ________________________                                       N
_ C1   Y ________________________                                       N
_ C2   Y ________________________                                       N
_ C3   Y ________________________ PR CTC01    CHP 34 9672-R21          N
_ C4   Y ________________________                                       N
_ C5   Y ________________________                                       N
_ C6   Y ________________________ PR MCSSPR01.0 CHP 18 2084-C24
# C6                              PR MCSSPR01.1 CHP 18 2084-C24
_ C7   Y ________________________
_ C8   Y ________________________                                       N
_ C9   Y ________________________                                       N
_ CA   Y ________________________                                       N
 F1=Help      F2=Split     F3=Exit      F4=Prompt    F5=Reset     F7=Backward
 F8=Forward   F9=Swap     F10=Actions  F12=Cancel   F13=Instruct F22=Command
```

   Figure 148. Port List

2. Select a port and the ***Connect to channel path*** action from the context menu (or action code **p**).

   Occupied ports cannot be connected. However, you may change the Occupied status of a port by overwriting the Occupied indicator.

   On the resulting Connect to Channel Path panel specify the target processor ID and channel path ID.

```
            Connect to Channel Path


 Specify the following values.

 Switch ID  : 99  Port . . . : C4

 Processor ID . . . . . . ________  +
 Channel Subsystem ID . . _         +
 Channel path ID  . . . . __        +

  F1=Help     F2=Split    F3=Exit
  F4=Prompt   F5=Reset    F9=Swap
 F12=Cancel
```

Figure 149. Connect to Channel Path

Note: If you selected a spanned physical channel path as connection target, HCD connects the port to all of the channel's instances across all channel subsystems. You can see the result of your connection action in the Port List (Figure 148 on page 150).

Connecting a control unit

The following procedure describes how to define a connection between a control unit and a switch starting from the Switch List.

1. On the Switch List, select the switch and the ***Work with ports*** from the context menu (or action code **p**). The Port List is displayed (see Figure 148 on page 150).
2. Select a port and the ***Connect to control unit*** action from the context menu (or action code **u**).

```
             Connect to Control Unit


 Specify the following values.

 Switch ID  . . . . : 99  Port . . . . . . . : C4

 Control unit numbers . . 00E1  ____  ____  ____  ____  ____  ____  ____  +


  F1=Help     F2=Split    F3=Exit     F4=Prompt   F5=Reset    F9=Swap
  F12=Cancel
```

Figure 150. Connect to Control Unit

   You can enter up to eight control unit numbers each time the panel is displayed.
3. Repeat defining connections for all control units connected to the switch.

Connecting another switch

The following procedure describes how to define a connection between a switch and another switch.

1. On the Switch List, select the switch and the ***Work with ports*** action from the context menu (or action code **p**). The Port List is displayed (see Figure 148 on page 150).
2. Select a port and the ***Connect to switch*** action from the context menu (or action code **w**).

```
          Connect to Switch


 Specify the following values.

 Switch ID  : 99  Port . . . : C4

 Switch ID  . . . . . 98  +
 Port . . . . . . . . C1  +

  F1=Help     F2=Split    F3=Exit
  F4=Prompt   F5=Reset    F9=Swap
 F12=Cancel
```

Figure 151. Connect to Switch

3. Repeat defining connections for all other switches connected to the selected switch.

Additional actions on the port list

Besides connecting channel paths, control units, and other switches to a switch, you can perform additional actions on the Port List. Most of these actions are also possible on the Port Matrix panel, this panel offers an alternative procedure. The following panel shows data after connecting a channel path, a control unit, and another switch as described in the previous sections.

```
  Goto  Options  Filter  Backup  Query  Help
-------------------------------------------------------------------------
                              Port List                       Row 22 of 128
Command ===> _____________________________________________ Scroll ===> CSR

Select one or more ports, then press Enter.

Switch ID . . . . . . . : 71   Address :      Switch 71
Switch configuration ID : SW71

                                  -------------Connection---------------   DED
/ Port H Name +                      Unit ID         Unit Type         O B CON +
_ 92   Y                          SW 03       PO  20 2032              N N _
_ 93   Y                          PR P2084.1  CHP 21 2084-B16          N N _
_ 94   Y                          PR P2084.2  CHP 22 2084-B16          N N _
_ 95   Y SUBC6F-A2                                                     N N _
_ 96   Y SUBC91-A0                                                     N N _
_ 97   Y ________________________                                      N N _
_ 98   Y ________________________                                      N N _
_ 99   Y SUBC6F-C0                CU BA80            3990              N N _
# 99                              CU BD80            3990
_ 9A   Y SUBC91-A2                                                     N N _
_ 9B   Y N40-50                                                        N N _
_ 9C   Y SUBC2D                                                        N N
_ 9D   Y SUBC6F-C2                                                     N N
_ 9E   Y SUBC6F-H0                                                     N N
_ 9F   Y SUBC6F-H2                                                     N N
_ A0   Y JE0-25                   PR CB89     CHP 25 9672-E08          N N
_ A1   Y JE0-26                   PR CB89     CHP 26 9672-E08          N N
```

Figure 152. Port List

A disabled marker # in the action entry field indicates that the field is nonselectable and the whole row is disabled for processing. This occurs if more than one object is attached to one port, for example, for spanned channels or when multiple control units are connected to the same port. Except for the first object attached to the port, all other objects are flagged with the # sign. For example, if the port is connected to more than one unit, a disconnect action specified in the selectable row of that port will lead to the display of another panel where you can select the unit(s) to be disconnected.

Changing ports to installed or uninstalled

The H column indicates whether the ports are installed (Y for Yes) or not (N for No). If you did not specify a range of ports to be set to installed while adding a switch, HCD automatically sets the minimum range of ports to installed at switch definition time.

You can set the port to installed or uninstalled by just typing over the Y or N value in the H column.

Changing ports to occupied or not occupied

The O column indicates whether a port is occupied (Y for Yes) or not (N for No) by a system external to the IODF.

You can change the port to Occupied or Not Occupied by just typing over the Y or N value in the O column.

Establishing dedicated connections and blocking ports

If no switch configurations are defined for a switch, the B and Ded Con columns for blocked indicator and port of dedicated connection are not shown. If switch configurations are defined, data of the first switch configuration (in alphabetical order) is displayed. To display this data for other switch configurations, use ***Select other switch configurations*** from the ***Option*** action bar choice.

You can change the blocked indicator and dedicated connections for the switch configuration displayed in the panel header by just typing over the values in the appropriate column. See also "Establishing dedicated connections" on page 154 and "Blocking ports" on page 154 for detailed explanations.

Note: You cannot establish dedicated connections for a FICON switch.

Working with switch configurations

In this section you can learn about defining switch configuration data, changing the switch configuration IDs, and deleting switch configurations.

Defining switch configuration data

After defining the switch, you can define the switch configuration, that is the "inside" of the switch.

1. On the Switch List, select the switch and the ***Work with switch configurations*** action from the context menu (or action code S). HCD displays the Switch Configuration List containing all currently defined configurations for that particular switch.

```
  Goto  Backup  Query  Help
--------------------------------------------------------------------------------
                          Switch Configuration List                  Row 1 of 1

Select one or more switch configurations, then press Enter. To add, use F11.

Switch ID  . . . . : 99         First switch

  Switch       Default
/ Config. ID   Connection + Description
_ NIGHT        Allow        ________________________________
```

Figure 153. Switch Configuration List

2. Use F11=Add to add a new switch configuration. The data-entry fields are shown, with sample data:

```
Add or Repeat Switch Configuration


Specify or revise the following values.

Switch ID . . . . . . . : 99

Switch configuration ID . BASIC___

Description . . . . . . . ________________________________

Default connection  . . . _1  1.  Allow
                              2.  Prohibit
```

Figure 154. Add or Repeat Switch Configuration

The `Default connection` field sets the default connection for all ports, either allowed or prohibited. Individual port connections can be reset on the Port Matrix panel described in the next step.

3. On the Switch Configuration List, select the switch configuration and the ***Work with port matrix*** action from the context menu (or action code **s**). HCD displays the Port Matrix panel showing all ports currently installed on the switch.

```
           Goto  Backup  Query  Help
------------------------------------------------------------------------------
                          Port Matrix                 Row 1 of 28 More:       >

Command ===> ___________________________________________ Scroll ===> PAGE

Select one or more ports, then press Enter.

Switch ID  . . . . . . . . : 99
Switch configuration ID  . : BASIC      Default connection : Allow

                                     Ded   --Dynamic Connection Ports Ex--
/ Port Name +                    B  Con + 0 1 2 3 4 5 6 7 8 9 A B C D E F
_ E0   ________________________  N  __    \ * * * * * * * * * * * * * * *
_ E1   ________________________  N  __    * \ * * * * * * * * * * * * * *
_ E2   ________________________  N  __    * * \ * * * * * * * * * * * * *
_ E3   ________________________  N  __    * * * \ * * * * * * * * * * * *
_ E4   ________________________  N  __    * * * * \ * * * * * * * * * * *
```

Figure 155. Port Matrix

Scroll to the right on the Port Matrix panel to view further ports.

Establishing dedicated connections

You can establish a dedicated connection between two ports by specifying the number of a port to which a dedicated connection is defined in the `Ded  Con` column. After pressing the Enter key HCD completes the definition by mirroring the definition. For example, if you specify a dedicated connected in the row of port E0 to port E4, HCD establishes the same dedicated connection in the row of E4 to port E0.

A dedicated connection acts like a physically cabled connection between two ports. Establishing a dedicated connection is not the same as prohibiting all but one connection to a port. Dedicated connections are required to support communication through an ESCD with an ESCON Converter (ESCC), and to support chained ESCDs.

If you maintain switch configurations with HCD, you must define the required dedicated connections before you connect a CVC or CBY channel path to a switch port.

If you have alternate required dedicated actions in a configuration (for example, for backup purposes), you must define alternate switch configurations.

Blocking ports

You can block or unblock a port by just specifying a Y for Yes or N for No in the B column.

Dynamic connection ports

In our example the default switch connection is set to allowed. To prohibit a switch connection from, for example, EA to FA, scroll down to port EA and scroll right to port FA. Then type over the `*` symbol with a p under the heading `Dynamic Connection Ports`. After pressing the Enter key HCD automatically mirrors the entries on the diagonal of the matrix. That means, HCD applies the same entry not only to the matrix element EA/FA but also to FA/EA.

To ensure a correct mirroring of the entries, press the Enter key each time you changed one complete row.

The following symbols can be shown under the heading `Dynamic Connection Ports`:

A
Indicates that the dynamic connection is allowed.

P
Indicates that the dynamic connection is prohibited.

*****
Indicates that the dynamic connection is set to the default connection attribute (shown in the instruction area on the top of the panel).

****
Indicates the intersection of a port's column and row. A FICON switch supports the definition of such a loopback port.

-
Indicates that one of the dynamic connection ports is not installed or supported.

To allow you a more comfortable scrolling in the matrix, use the FIND command. For example, type:

```
FIND EA, FA
```

to find the row of port EA and the column of port FA.

Changing the switch configuration ID

To change the ID of a switch configuration, perform the following steps:

1. On the Switch List, select the switch and select the ***Work with switch configuration*** action from the context menu (or action code s). HCD displays the Switch Configuration List.
2. On the Switch Configuration List select the switch configuration and the ***Repeat (copy) switch configurations*** action from the context menu (or action code r). The Repeat Switch Configuration panel is displayed.

```
Add or Repeat Switch Configuration


Specify or revise the following values.

Switch ID . . . . . . . : 99

Switch configuration ID . ________

Description . . . . . . . ________________________________

Default connection  . . . 1   1.  Allow
                              2.  Prohibit

 F1=Help    F2=Split   F3=Exit    F5=Reset   F9=Swap   F12=Cancel
```

Figure 156. Add or Repeat Switch Configuration

3. Specify the new identifier for the switch configuration and press the Enter key. HCD displays the Switch Configuration List now showing the new switch configuration.
4. Delete the old switch configuration by selecting the switch configuration and the ***Delete*** action from the context menu (or action code d). HCD displays a confirmation panel before showing the updated Switch Configuration List.

Generating a switch matrix

When selecting ***Generate Matrix***, HCD will define the content of the switch matrix according to the logical paths defined and the existing matrix will be replaced.

This is useful, if channel path - control unit connections have been added or changed and you want to define a switch configuration which considers all defined logical paths running through the selected switch.

To generate a matrix, perform the following steps:

1. On the Switch List select the switch and select the ***Work with switch configuration*** action from the context menu (or action code s). HCD displays the Switch Configuration List.
2. On the Switch Configuration List select a configuration (or action code g). HCD will issue an informational message requiring you to confirm your action. The successful generation of the matrix is confirmed by HCD.

When generating the switch configuration, all defined logical paths will be analyzed by HCD. In the case of chained connections, all possible paths of chaining switches will be determined by their respective switch configurations. Therefore, it is necessary, that you select a switch configuration for each chained switch, for which more than one switch matrix has been defined. In this case, the following panel

```
                    Select Active Switch Configurations              Row 1 of 2
Command ===> ___________________________________________ Scroll ===> PAGE

For each switch select one to be used as context to generate a switch
matrix.


Switch ID: 01 Configuration ID: SC1

/ Switch  Configuration Description
_ 02      SC1
_ 02      SC2
***************************** Bottom of Switch Configurations data **********************
```

Figure 157. Select Active Switch Configurations

will be displayed allowing selection of the related switch configurations which are considered for the ***Generate matrix*** action.

The following rules are applied when generating a matrix:

- The default connection for the switch configuration will be set to prohibited.
- A logical definition between a channel path using the switch as a dynamic switch and a control unit will lead to a dynamically allowed connection between the channel path entry port and the port serving as the link address.
- A logical definition between a channel path without a dynamic switch and a control unit, or connections via a chaining switch, will lead to a dedicated connection.

  HCD will define a dedicated connection in all the cases where there is only one connection possibility left between the control unit and the channel path entry port. For dedicated connections, HCD considers only those ports, which have not yet been used for dynamic connections. In the case of chained connections, the selected switch configurations of chaining switches are used to determine the possible paths.
- Connections between ports connected to a channel path type, which make a specific port configuration necessary, will be set accordingly. For example, connections between ports serving as entry ports for FCV channels will be defined as explicitly dynamically prohibited.
- In addition to generating the matrix, HCD issues informational messages for all cases in which a path was not completely defined or where different paths conflict with each other. If HCD is not able to determine port connections unambiguously, it will leave those definitions to the user.

Deleting switch configurations

To delete a switch configuration, perform the following steps:

1. On the Switch List, select the switch and select the ***Work with switch configuration*** action from the context menu (or action code s). HCD displays the Switch Configuration List.
2. On the Switch Configuration List select the switch configuration and the ***Delete*** action from the context menu (or action code d). The Confirm Delete Switch Configuration panel is displayed.

```
                Confirm Delete Switch Configuration
                                                        Row 1 of 1
Command ===> _________________________________ Scroll ===> PAGE

croll forward to view the complete list of switch
configurations to be deleted. Press ENTER to confirm delete
request. Press F12 to cancel delete request.

Switch ID . . . . . . . : 03

Switch Config. ID  Description
SWCON1
************************ Bottom of data ************************
```

Figure 158. Confirm Delete Switch Configuration

3. Press the Enter key to confirm deletion of the switch configuration, or use the F12=Cancel key to cancel the delete request.
4. The updated Switch Configuration List is displayed.

Chapter 8. How to work with I/O Autoconfiguration

You can use the HCD I/O Autoconfiguration function to perform automatic configuration changes in order to define switched FICON connected or FICON directly connected DASD and tape control units and devices which are currently not yet defined in the base IODF, which can be either the active or currently accessed IODF. Proposed definitions are automatically written into a specified target work IODF which is created as a copy of the active or accessed IODF.

For I/O Autoconfiguration, HCD invokes the Input/Output Subsystem (IOS) to discover I/O hardware in the current configuration that is accessible to the system. HCD can define connections between processors and controllers through combinations of switch-attached paths and point-to-point paths. Proposed definitions are automatically written into a specified target work IODF which may be created as a copy of the active or accessed IODF. You can control the proposals for autoconfiguration changes by specifying autoconfiguration policies.

I/O Autoconfiguration is available starting with zEnterprise processors (processor type 2817). It requires the same access authorization as used for dynamic reconfiguration (see "Giving users access authority" on page 322).

During I/O Autoconfiguration processing, HCD presents the discovered controllers, control units and devices to the user and offers proposals how to configure them. The user can accept or change these definition proposals. On the user's confirmation, the configuration definitions are then written into the specified target IODF.

HCD provides a series of dialogs to perform automatic I/O configuration:

1. **A dialog to define autoconfiguration policies:**

   Before you start the discovery processing, you can define the policies which control the automatic definition of discovered control units and devices.

   For more information, refer to "How to define autoconfiguration policies" on page 159.

2. **A dialog to perform the discovery and definition process:**

   You define the scope of discovery, select the autoconfiguration operation mode (attended or unattended fast-path mode), select the IODF against which the discovery should run and the target IODF that receives the resulting configuration definitions for all discovered new or changed controllers.

   After having defined or revised the mentioned options, you can invoke the discovery and definition processing. Depending on the selected operation mode, the dialog either leads you through the configuration steps or directly defines the discovered controllers and devices in the target IODF.

   For more information, refer to "How to perform automatic I/O configuration" on page 166.

Through determining the configuration characteristics of the discovered control unit as established at the controller side, and through establishing a recommended configuration based on availability and performance considerations, this functionality ensures that the controller configuration matches its logical definition.

After a successful run of I/O Autoconfiguration, you have complete update control regarding the I/O definitions written to the target IODF.

How to define autoconfiguration policies

Before you let HCD discover and define control units and I/O devices, you must specify your desired autoconfiguration policies. This task comprises the following subtasks:

- "How to set keywords for autoconfiguration policies" on page 160
- "How to define logical partition groups for autoconfiguration" on page 164

© Copyright IBM Corp. 1994, 2022

- “How to define OS groups for autoconfiguration” on page 165

How to set keywords for autoconfiguration policies

To set the autoconfiguration policies by means of keywords, perform the following:

- Select ***Edit profile options and policies*** from the HCD ***Primary Task Selection*** panel to invoke the ***Profile Options and Policies*** menu (Figure 159 on page 160).

```
                  Profile Options and Policies


Select type of data to define.

    1.  HCD profile options
    2.  Autoconfiguration policies
    3.  LP groups for autoconfiguration
    4.  OS groups for autoconfiguration


 F1=Help     F2=Split    F3=Exit     F9=Swap    F12=Cancel
```

Figure 159. Profile Options and Policies

- Select **Autoconfiguration policies**.
- This invokes the ***Autoconfiguration Policies*** dialog which displays the current value settings for autoconfiguration policy keywords as they are either explicitly set in the HCD profile data set or as they are defaulted by HCD. Use this dialog to revise or change the displayed keyword values.

  The autoconfiguration policies are saved in the HCD profile (see also “Defining an HCD profile” on page 16 for information on how to edit the HCD profile data set).

```
                             Autoconfiguration Policies
                                                   Row 1 of 13 More:       >
Command ===> ___________________________________________ Scroll ===> CSR

Edit or revise autoconfiguration policies.

HCD Profile : DOCU.HCD.PROFILE

/ Policy keyword           P Value +
_ AUTO_CHPID_EXCLUDE       N SYSA.0,00-09
_ AUTO_CHPID_INCLUDE       N SYSA.1,1A-1F
# AUTO_MATCH_CU_DEVNUM     Y YES
# AUTO_SS_ALTERNATE        Y 1
# AUTO_SS_DEVNUM_SCHEME    Y PAIRING
# AUTO_SUG_CU_RANGE        Y 0001-FFFE
# AUTO_SUG_DEV_RANGE       Y 0001-FFFF
# AUTO_SUG_DYN_CHPIDS      Y 2
# AUTO_SUG_LPGROUP         N ____________________________________________
# AUTO_SUG_OSGROUP         N ____________________________________________
# AUTO_SUG_STAT_CHPIDS     Y 6
_ AUTO_SWAD_EXCLUDE        N 1A
_ AUTO_SWAD_INCLUDE        N ____________________________________________
***************************** Bottom of data ******************************
```

Figure 160. Autoconfiguration Policies

Column ***P*** is set to Y (for yes), if a change of the policy key value is active immediately. Value N denotes that the value change only becomes active with a new discovery. For more information, refer to “How to change autoconfiguration policies during the autoconfiguration process” on page 163.

You can scroll to the right in this list to see a ***Description*** column for each policy keyword. This column may display an existing user comment, which you can change, or you can specify a new comment.

For keywords that you may specify multiple times with different values, for example, AUTO_CHPID_EXCLUDE, actions ***Add*** and ***Delete*** are available from the context menu.

To retrieve an online explanation of a keyword, move the cursor into its ***Value*** column and press the F1 key.

The subsequent topics list and explain the available keywords for defining your desired autoconfiguration policy.

Exclude CHPIDs from the discovery

AUTO_CHPID_EXCLUDE

This policy specifies a single CHPID number or a range of CHPID numbers that are excluded from being used for discovery or channel path assignment for a specific channel subsystem (by giving its ID) or all channel subsystems (by specifying *) of a certain processor. The keyword can occur multiple times.

The following example specifies that CHPIDs 04, 20 to 2F, and 42 are not used for channel subsystem PROCA.0. CHPID 42 is also not used for all other channel subsystems of processor PROCA.

```
AUTO_CHPID_EXCLUDE = PROCA.0,04
AUTO_CHPID_EXCLUDE = PROCA.0,20-2F
AUTO_CHPID_EXCLUDE = PROCA.*,42
```

Include CHPIDs for the discovery

AUTO_CHPID_INCLUDE

This policy specifies a single CHPID number or a range of CHPID numbers that should be considered for discovery and channel path assignment for a specific channel subsystem (by giving its ID) or all channel subsystems (by specifying *) of a certain processor. The keyword can occur multiple times. If this option is specified, no other channel paths are considered.

The following example specifies that CHPIDs with numbers 04, 20 - 2F, and 42 are used for discovery and definition from channel subsystem PROCA.0. CHPID 42 may also be used from all other channel subsystems of processor PROCA. No other unspecified CHPID number for processor PROCA is considered for discovery and definition.

```
AUTO_CHPID_INCLUDE = PROCA.0,04
AUTO_CHPID_INCLUDE = PROCA.0,20-2F
AUTO_CHPID_INCLUDE = PROCA.*,42
```

If no value is specified for a given channel subsystem, all CHPID numbers (00 - FF) are considered for discovery and channel path assignment.

Control unit number should match base device number

AUTO_MATCH_CU_DEVNUM

This policy specifies whether for autoconfiguration definitions a control unit number should match the starting base device number.

If you specify YES (which is the default), the first base device is set to the same number as the control unit. If NO is specified, the device number of the first base device and the control unit number do not necessarily need to match.

Alternate subchannel set for proposed alias devices

AUTO_SS_ALTERNATE

This policy specifies the ID of the subchannel set in which newly discovered PAV alias devices are defined during an auto-definition process, provided that free device numbers are available in this subchannel set, and processors that have access to the device range, support alternate subchannels.

The default subchannel set ID is 1.

Subchannel set device numbering scheme

AUTO_SS_DEVNUM_SCHEME

This policy defines the scheme for assigning device numbers to PAV alias devices in an alternate subchannel set.

Supported schemes are:

CONSECUTIVE
The alias device numbers in an alternate subchannel set are consecutive to the base device numbers.

DENSE
The device numbers in an alternate subchannel set are densely assigned, that is, the next free device numbers in the assigned device number range are used.

PAIRING
Base and alias device numbers are assigned alternatively starting with, for example, device numbers xx00 and xx80 for base devices versus xx80 and xx00 for alias devices.

NONE
Device and control unit numbers are not automatically applied. Instead, HCD presents the new discovered control units with a control unit number `0000` in the ***Proposed Control Unit List*** and the new devices with starting device number `0000` in the subsequent ***Proposed Control Unit / Device List***. You can thus manually insert free control unit numbers, respectively device numbers on the according lists, which are validated by HCD. HCD issues a message to notify you to assign the numbers.

If you work in attended operation mode, (that is, `Show proposed definitions` has been set to `Yes` in Figure 167 on page 167), HCD once more offers you the opportunity to review your input by redisplaying both lists with the updated numbers after you pressed enter. All actions are now available on the lists as in any other setting of the AUTO_SS_DEVNUM_SCHEME policy.

Otherwise, if you work in unattended fast-path operation mode, HCD accepts the numbers you entered and processing proceeds.

PAIRING is the default.

Control unit number range for auto proposal

AUTO_SUG_CU_RANGE
This policy specifies the range of control unit numbers from which numbers for auto-defined control units are taken. If no value is specified, range 0001-FFFE is taken as default.

Specify the range according to the following syntax:

```
nnnn-mmmm,   where:  nnnn is the lower range boundary,
                     mmmm is the upper range boundary.
```

Device number range for auto proposal

AUTO_SUG_DEV_RANGE
This policy specifies the range of device numbers from which device numbers for auto-defined devices are taken. If no value is specified, range 0001-FFFF is taken as default.

Note: For *AUTO_SUG_DEV_RANGE* and *AUTO_SUG_CU_RANGE*, I/O Autoconfiguration avoids using device and control unit numbers in the 0000-00FF range in subchannel set 0. If you have no alternative number ranges available, you must configure the CUs or devices manually in this range.

Number of static CHPIDs to be assigned

AUTO_SUG_STAT_CHPIDS
This policy specifies the number of static channel paths to be assigned to a control unit definition, if it is auto-defined. At least one and not more than 8 static channel paths can be defined.

The default is 6.

Maximum number of dynamic CHPIDs

AUTO_SUG_DYN_CHPIDS

This policy specifies the number of dynamically managed channel paths allowed on a control unit definition, if it is auto-defined. A maximum number of 7 dynamic channel paths is allowed, however, the sum of AUTO_SUG_STAT_CHPIDS and AUTO_SUG_DYN_CHPIDS must not exceed 8.

The default is 2.

LP group for autoconfiguration

AUTO_SUG_LPGROUP

This policy specifies the name of a group of logical partitions to which discovered devices are assigned. If no name is set, devices are assigned to all partitions of the active sysplex. The reserved group name ALL signals this during autoconfiguration processing.

OS group for autoconfiguration

AUTO_SUG_OSGROUP

This policy specifies the name of a group of OS configurations to which discovered devices are assigned. If no name is set, devices are assigned to all OS configurations which correspond to the active LP group.

Exclude switch addresses from the discovery

AUTO_SWAD_EXCLUDE

This policy specifies a single switch address or a range of switch addresses that are excluded from being used for discovery or channel path assignment. Note that switch addresses have to be specified rather than switch IDs. The keyword can occur multiple times.

The following example specifies that switches with addresses 14 and 20 to 2F are not used for discovery and channel path assignments:

```
AUTO_SWAD_EXCLUDE = 14
AUTO_SWAD_EXCLUDE = 20-2F
```

If no value is specified, no switch is excluded from discovery and channel path proposal.

Include switch addresses for the discovery

AUTO_SWAD_INCLUDE

This policy specifies a single switch address or a range of switch addresses that can be used for discovery and channel path assignment. Note that switch addresses have to be specified rather than switch IDs. The keyword can occur multiple times.

The following example specifies that switches with addresses 14 and 20 to 2F can be used for discovery and channel path assignments. No other unspecified switch address is considered for discovery and channel path assignments.

```
AUTO_SWAD_INCLUDE = 14
AUTO_SWAD_INCLUDE = 20-2F
```

If no value is specified, all switch addresses in the range 00 to FF can be used for discovery and channel path proposal.

How to change autoconfiguration policies during the autoconfiguration process

You can change your defined autoconfiguration policies between two subsequent controller discoveries without the need to restart I/O Autoconfiguration. For this purpose, in the ***Discovered New or Changed Controller List*** dialog (Figure 168 on page 169), select the ***Policy*** action bar choice, and then select

1. Change policy options to invoke the ***Autoconfiguration Policies*** dialog as described in "How to set keywords for autoconfiguration policies" on page 160. You can now change the values of certain keywords that you want to apply on the subsequent controller discovery and control unit autoconfiguration. However, only changes for those keywords become effective immediately for which HCD sets column ***P*** to Y in the ***Autoconfiguration Policies***, for example, AUTO_MATCH_CU_DEVNUM (see also Figure 160 on page 160).

Changes of all policy keywords denoted with value N in column ***P*** are also possible between two controller discoveries, but require a new fabric discovery (as described in "How to perform automatic I/O configuration" on page 166) to become effective.

How to define logical partition groups for autoconfiguration

A logical partition group (LP group) is a collection of logical partitions containing z/OS systems that belong to the same sysplex. This collection is used by I/O Autoconfiguration to determine to which partitions the discovered devices should be assigned.

Selecting option 3 **LP groups for autoconfiguration** from the ***Profile Options and Policies*** menu (see Figure 159 on page 160) invokes the ***Autoconfiguration LP Group List*** which displays a list of partition groups (LP groups).

Use the ***Autoconfiguration LP Group List*** to define or delete LP groups, to assign logical partitions to a group or unassign partitions from a group.

```
            Autoconfiguration LP Group List
                                                  Row 1 of 2
Command ===> ___________________________ Scroll ===> CSR

To view assigned partitions, select one or more LP groups,
then press Enter. To add an LP group, use F11.

/ LP group name   Description
_ LPGROUPO        COM1
_ LPGROUPX        COM1, SYSA1
_ LPGROUP0        SYSA1, SYSA2, SYSA3, SYSA4
_ LPGROUP2        SYSA1, SYSA2
_ LPLGROUP        SYSA1, SYSA3, SYSA4
******************** Bottom of data **********************


 F1=Help        F2=Split       F3=Exit        F4=Prompt
 F7=Backward    F8=Forward     F9=Swap       F11=Add
F12=Cancel     F22=Command
```

Figure 161. Autoconfiguration LP Group List

Invoking action ***Add like*** with action code **a** for an LP group, or just pressing F11, invokes the ***Add Autoconfiguration LP Group*** dialog with two entry fields for the LP group name and an optional user description.

Invoking action ***View/Assign logical partitions*** with action code **s** for an LP group invokes the ***Autoconfiguration LP Group Assignment List***. This list displays all logical partitions assigned to the named LP group. You can assign a new partition to or unassign an included partition from the LP group.

```
        Autoconfiguration LP Group Assignment List
                                                    Row 1 of 2
Command ===> ________________________________ Scroll ===> PAGE

Select one or more logical partitions, then press Enter. To
add, use F11.

LP group name : LPGROUP0     SYSA1, SYSA2, SYSA3, SYSA4

/ Partition Name       Description
_ P2817.0.SYSA1        logical Partition 1, CSS0
_ P2817.1.SYSA2        logical Partition 2, CSS1
_ P2817.2.SYSA3        logical Partition 3, CSS2
_ P2817.2.SYSA4        logical Partition 4, CSS2
*********************** Bottom of data ************************

 F1=Help         F2=Split        F3=Exit         F4=Prompt
 F7=Backward     F8=Forward      F9=Swap        F11=Add
F12=Cancel      F22=Command
```

Figure 162. Autoconfiguration LP Group Assignment List

To add a partition to an LP group, press F11 in this list to invoke the ***Add Partition to LP Group*** dialog.

```
          Add Partition to LP Group


Specify the following values.

LP group name  . . . . . : LPGROUP0     SYSA1, SYSA2, SYSA3, SYSA4

Processor ID . . . . . . . P2817___  +
Partition Name . . . . . . SYSA5___  +





F1=Help     F2=Split    F3=Exit     F4=Prompt   F5=Reset    F9=Swap
F12=Cancel
```

Figure 163. Add Partition to LP Group

In the entry fields ***Processor ID*** and ***Partition Name***, specify the name of the processor and the name of the partition which you want to add to the LP group. After you entered a processor name, the dialog lets you select a certain partition from that processor. You can only enter processor IDs from processors that are defined in the currently accessed IODF.

How to define OS groups for autoconfiguration

An OS group is a collection of OS configurations which is used by autoconfiguration to determine to which operating systems of type MVS the auto-defined devices should be assigned.

Selecting option 4 **OS groups for autoconfiguration** from the ***Profile Options and Policies*** menu (see Figure 159 on page 160) invokes the ***Autoconfiguration OS Group List*** which displays a list of operating system groups.

Use the ***Autoconfiguration OS Group List*** to view, add, or delete OS groups or to assign autoconfigured devices to operating systems.

```
          Autoconfiguration OS Group List
                                                   Row 1 of 1
Command ===> ___________________________ Scroll ===> CSR

To view assigned OS configurations, select one or more OS
groups, then press Enter. To add an OS group, use F11.

/ OS group   Description
_ OSGROUP1   Currently active OS group
********************* Bottom of data **********************


 F1=Help        F2=Split       F3=Exit        F4=Prompt
 F7=Backward    F8=Forward     F9=Swap       F11=Add
F12=Cancel     F22=Command
```

Figure 164. Autoconfiguration OS Group List

Invoking action ***Assign operating system config*** with action code **S** for an OS group invokes the ***Autoconfiguration OS Group Assignment List***. This list displays all operating system configurations assigned to the named OS group. You can assign a new operating system to or unassign an included operating system from the OS group.

```
        Autoconfiguration OS Group Assignment List

Command ===> ___________________________ Scroll ===> CSR

Select one or more OS configurations, then press Enter. To
add, use F11.

OS group name : OSGROUP1     Currently active OS group

/ OS Configuration ID  Description
_ OS1                  Primary OS
_ OS2                  MVS Test System
_ OS3                  Backup
********************* Bottom of data **********************
```

Figure 165. Autoconfiguration OS Group Assignment List

To add an OS configuration to an OS group, press F11 in this list to invoke the ***Add Operating System Configuration to OS Group*** dialog.

```
            Add Operating System Configuration to OS Group


Specify the following values.

OS group name  . . . . : OSGROUP1      Currently active OS group

OS configuration ID  . . OS4_____  +



 F1=Help     F2=Split    F3=Exit     F4=Prompt   F5=Reset    F9=Swap
F12=Cancel
```

Figure 166. Add Operating System Configuration to OS Group

For the entry field ***OS configuration ID***, this dialog provides prompting support to let you easily select a certain OS configuration defined for the sysplex.

How to perform automatic I/O configuration

After having specified all policies as described in "How to define autoconfiguration policies" on page 159, you can let HCD try to discover and automatically define control units and I/O devices into a specified target IODF.

The I/O autoconfiguration process consists of the following steps:

1. ***The fabric discovery:*** You invoke the I/O Autoconfiguration function from the HCD ***Primary Task Selection*** panel. This in turn causes HCD to invoke IOS to perform the fabric discovery process. You can select the scope of discovery by searching all controllers, new controllers only, search for the controller containing a specific control unit, or search for a controller with a certain serial number or for multiple controllers matching a serial number pattern. The result of the fabric discovery is the list of controllers that is new or has changed compared to the base IODF.

   Note that the scope of discovery is the active sysplex.
2. ***The controller discovery:*** From the discovered controllers, HCD retrieves and proposes control unit and device types and numbers, channel path assignments, partition access, and OS device parameters. You can choose whether HCD should perform the definition without user interaction, or whether the dialog should show the proposed definitions so that you can confirm or change these values.

I/O Autoconfiguration makes temporary changes to the active I/O configuration by adding devices that are used exclusively for discovery on the targeted systems in order to search for attached devices.

You invoke the I/O Autoconfiguration process from the HCD dialog as follows:

1. From the ***Primary Task Selection*** panel select ***1. Define, modify, or view configuration data***.
2. Then select ***6. Discovered new and changed control units and I/O devices***.

HCD invokes the ***Discovery and Autoconfiguration Options*** dialog shown in Figure 167 on page 167 which lets you select processing options for discovery and autoconfiguration.

```
                 Discovery and Autoconfiguration Options


 Specify autoconfiguration options. Then, press Enter to start the
 discovery process.

 Autoconfiguration is based on 2  1. Active IODF
                                  2. Currently accessed IODF

 Scope of discovery  . . . . . 1  1. New controllers only
                                  2. All controllers
                                  3. Controller containing CU  ____    +
                                  4. Controller with S/N       ____________

 Show proposed definitions . . 1  1. Yes   2. No
 Force full mode discovery . . 2  1. Yes   2. No
 Tolerate incapable systems    2  1. Yes   2. No

 Target IODF name  . . . 'DOCU.IODF21.AUTO21.WORK'                      +

  F1=Help     F2=Split    F3=Exit     F4=Prompt   F5=Reset    F9=Swap
  F12=Cancel
```

Figure 167. Discovery and Autoconfiguration Options

Specify your desired processing options for discovery and autoconfiguration definition:

Autoconfiguration is based on

Choose whether the active production IODF or the currently accessed IODF should be taken as the base for new configuration definitions resulting from the discovery process.

This means, HCD checks the discovered devices accessible to the system against this selected IODF, whether they are already defined or not. If they are found to be new or changed, the resulting configuration proposals are also adopted to fit into this IODF.

HCD copies this IODF to the selected target IODF (see ***Target IODF name*** later in this list) which receives all changes done to the configuration during autoconfiguration processing.

Note: You can use an IODF as base IODF, if it represents the active configuration or a potential target configuration for the next dynamic activation.

Scope of discovery

With this option you decide about the controllers to be discovered:

- ***New controllers only:*** HCD discovers and returns only new controllers, which are not yet known to the LPARs in the selected LP group.
- ***All controllers:*** HCD discovers and returns all new controllers as well as all changed controllers.
- ***Controller containing CU:*** HCD performs a discovery limited to that controller containing the control unit with the specified number. The referenced control unit must be a DASD or tape control unit and must be defined in the base IODF.
- ***Controller with S/N:*** HCD performs a discovery limited on that controller with the specified serial number or on multiple controllers matching a serial number pattern. You can specify a complete serial number, or look for multiple controllers using a wildcard (*) as prefix or suffix or both of the pattern. A wildcard matches any number of characters. For example, F30WD, F3*, *F3*, *WD, or *WD* are valid values to include controller F30WD.

Show proposed definitions

You can decide whether the dialog should display proposed definitions for possible configuration changes. Select Yes if you want to work in an attended operation mode. In this mode, HCD invokes a subsequent series of dialogs in which you can revise and change the proposed settings. How to work in this attended mode is described in "How to apply updates to the autoconfiguration proposals" on page 169.

Select No if you want to run the unattended fast-path of I/O Autoconfiguration. In this case, HCD does not offer a possibility to revise the proposals or to update or add definitions. Instead, the HCD definitions are completely saved in the target IODF immediately. However, if you specified AUTO_SS_DEVNUM_SCHEME = NONE in your autoconfiguration policy, the dialogs where you can define control unit and device numbers are shown.

Force full mode discovery

Decide when discovery processing should stop. If set to No, which is the default, processing stops after several consecutive unused CUADD values that do not exist on a target controller. With this option set to Yes, for each discovered controller, all unused logical control unit addresses (CUADD values) and unit addresses are checked for changes.

Tolerate incapable systems

Decide whether discovery processing should stop if the discovery target scope (specified with policy AUTO_SUG_LPGROUP)

- includes partitions that contain systems that are not able to perform I/O autoconfiguration because of missing support in software or hardware, or
- if it includes partitions that are not active or that are containing systems that do not belong to the current sysplex.

If set to No, which is the default, processing stops if the active LP group contains an inactive system or a system not capable for autoconfiguration. With this option set to Yes, incapable or inactive systems are ignored and excluded from the active LP group.

Target IODF name

Type the name of a work IODF that will receive the configuration definitions for all discovered new or changed controllers, according to your selected scope of discovery.

This input is required. The specified IODF can either be an existing work IODF, or it is created by HCD. In any case, the IODF specified in the ***Autoconfiguration is based on*** entry field is copied to the specified target IODF.

The target IODF must not be enabled for multi-user access.

Note: As soon as you accepted any proposals into your target IODF, it becomes the new currently accessed IODF.

How to apply updates to the autoconfiguration proposals

This topic explains how to work in the attended operation mode, that is, with option *Show proposed definitions* set to 1 (Yes) in the **Discovery and Autoconfiguration Options** panel shown in Figure 167 on page 167.

"How to work in unattended mode" on page 172 explains the unattended fast-path discovery.

After specifying your desired options on the **Discovery and Autoconfiguration Options** panel, pressing Enter starts the discovery process. HCD notifies users with the message: ***FABRIC discovery in progress - please wait ...***

After a successful discovery, HCD displays the result in the ***Discovered New or Changed Controller List*** (Figure 168 on page 169). Only discovered controllers are displaxed, which are reachable from all target systems, which are capable of discovery, and which have partitions defined in the LP group referenced by the AUTO_SUG_LPGROUP policy.

```
              Discovered New or Changed Controller List
  Policy  Backup  Query  Help
-------------------------------------------------------------
                                                  Row 1 of 12
Command ===> ____________________________ Scroll ===> PAGE

Select one or more controllers to be defined, then press
Enter.

                 Manufacturer
/  Type   Model  Name  Plant   Serial-#     New  Processed
_  2107   9A2    IBM   13      15663        Yes  No
_  2107   921    IBM   13      34211        Yes  No
_  2107   922    IBM   13      67884        Yes  No
_  3491   A01    IBM   13      18321        Yes  No
/  1750   511    IBM   13      28824        No   No
_  1750   522    IBM   13      43560        No   No
_  2105   F10    IBM   13      28251        No   No
_  2105   F20    IBM   13      12353        No   No
_  2105   800    IBM   13      17791        No   No

 F1=Help        F2=Split       F3=Exit        F4=Prompt
 F7=Backward    F8=Forward     F9=Swap       F10=Actions
 F12=Cancel     F22=Command
```

Figure 168. Discovered New or Changed Controller List

This panel lists all discovered controllers which are either not yet defined in the IODF, or whose definition in the IODF is different from discovered controller characteristics.

If you selected AUTO_SS_DEVNUM_SCHEME = NONE, all control unit numbers for new controls are prefilled with 0000. You see message ***Assign numbers for control units or devices. Then hit Enter.*** Exclude all control units which should not be added, and assign control unit numbers. Pressing Enter processes the line commands or edited fields. After pressing Enter a second time with no changes on the list, you see the message ***Items have been processed. Review them, then press Enter.*** You are then in the normal process flow as if control unit numbers have been proposed.

On this dialog, using action code /, you can select multiple controllers that you want to be defined or changed in the target IODF. HCD subsequentially processes each selected controller in the way described in the remainder of this topic.

Pressing Enter on this panel with selected controllers starts the controller discovery and definition process for the next selected controller. Users are notified with the message: ***CONTROLLER discovery in progress - please wait ...*** As a result of the discovery process, the ***Proposed Control Unit List*** offers definition proposals for the control units found in the currently processed controller.

```
                    Proposed Control Unit List
                                                                  Row 1 of 8
Command ===> ___________________________________________ Scroll ===> PAGE

Control unit type  . . : 1750 -511      Serial number  : 28824

Proposed switch.ports  : B0.75 B1.75 B0.76 B1.76 B0.77 B1.77 B0.78 B1.78 +

To accept the proposed values, press Enter. To modify them, edit the
fields, or select one or more control units to change, exclude or include
the corresponding definitions, then press Enter.


  CU   CU       # of     LPAR
/ ADD  number+  devices  Access+  New  Description                        I
/ 00   0130     256      ALL      Yes  ________________________________  Y
_ 01   0140     96       ALL      Yes  ________________________________  Y
_ 02   0150     64       ALL      Yes  ________________________________  Y
_ 03   0160     64       ALL      Yes  ________________________________  Y
 F1=Help        F2=Split       F3=Exit        F4=Prompt      F5=Reset
 F7=Backward    F8=Forward     F9=Swap       F12=Cancel     F22=Command
```

Figure 169. Proposed Control Unit List

The panel shown in Figure 169 on page 170 shows proposed definition details for existing or new control units configured in the discovered controller with the serial number 28824 displayed in the header of the panel. The indicated controller type 1750 has been determined by discovery, and is the proposed control unit type for all listed control units within the controller.

All control units are connected to the proposed switch ports as listed in the upper part of the panel. A plus sign (+) at the end of the switch port list signals, that the control units will have connections to more than eight switch ports. You can see the full list of connected switch ports for a control unit on the ***View Control Unit Definition*** dialog.

You can accept the proposed control unit definitions, or you can perform the following modifications:

- For control units showing Yes in column ***New*** (which indicates whether the control unit is not yet defined in the IODF, or is not yet connected to any of the LPARs defined in the AUTO_SUG_LPGROUP policy), you can overtype the values in column ***CU number***.
- Also, you can overtype the values in the ***LPAR Access*** and ***Description*** fields in this dialog. Note that when changing the prefilled LP group name in the ***LPAR Access*** column, you can only replace it by the name of another LP group, which defines a subset of those logical partitions contained in the LP group used during the autoconfiguration propose step.
- With action code / you get an overview of available actions on the selected control units:
  - With action code i, you can include the corresponding control unit definition into the target IODF, or with action code e, you can exclude the control unit from being defined. Your selection is reflected in column ***I***: Y denotes included and N denotes excluded control units.
  - Using action code c leads you to the ***Select Processor / CU*** panel (see Figure 95 on page 114). On this window, HCD displays a list of all defined processors. You can define how the control unit is to be attached to one or more processors.

When the controller discovery returns control units and devices, HCD checks the discovered switch ports (Figure 169 on page 170) for existing definitions in the target IODF to match the existing control unit/device numbers with the proposed ones and proceeds like follows:

Rules for discovered control units:

- For each discovered control unit that is already defined with the same CUADD value, the existing control unit definition is checked for the same serial number. If the serial numbers match, or the IODF definition does not contain a serial number, the control unit number of the existing control unit is used and updated with the serial number of the discovered control unit. If the serial numbers do not match, a warning message is given, and the discovered control unit is proposed to be newly defined with a new serial number. It is, however, recommended that the serial numbers match, or the serial number of the defined control unit should be blank.

- For each discovered control unit that is not yet defined in the IODF, a new control unit number is proposed.
- When a new control unit number is proposed, its value is taken from the preferred range specified by policy AUTO_SUG_CU_RANGE. If there is no free control unit number in the IODF within that range, a warning message indicates that the policy could not be followed, and a free control unit number outside of the range is proposed.
- Proposed existing control units are updated with the discovered serial number. If the type of a discovered control unit differs from its definition in the IODF, the definition is updated.
- Some controllers may respond indicating over-defined unit address configurations. In these situations, devices are included in the proposal for unit addresses that are not configured on the controller. You can leave these devices in the configuration, or you can remove them from the proposal.

Rules for discovered devices:

- For each discovered device that is already defined with the same unit address on an existing control unit, the existing device number is proposed. In that case, the definition may differ from the specified policy, for example for the subchannel set number.

  For non-existing devices on the control unit, the existing device numbering scheme is applied if possible.
- For new devices on new or existing control units where the existing device number scheme could not be applied, the device numbers are determined based on policies AUTO_SUG_DEV_RANGE and AUTO_MATCH_CU_DEVNUM. For PAV alias devices the numbers are additionally determined based on policies AUTO_SS_ALTERNATE and AUTO_SS_DEVNUM_SCHEME. If a policy could not be applied because no free numbers are available for the active LP group and OS groups, a warning message is given and free device numbers outside the policies may be used.

You can now apply desired modifications and press Enter after you are finished, or you can accept the proposed definitions without changes and press Enter. In both cases, HCD now displays the ***Proposed Control Unit / Device List***.

```
                     Proposed Control Unit / Device List            Row 1 of 8
Command ===> ___________________________________________________ Scroll ===> PAGE

Control unit type  . . : 1750-511       Serial number  : 28824

To accept the proposed values, press Enter. To modify them, edit the
fields, or select one or more device ranges to change, exclude or include
the corresponding definitions, then press Enter.

  ------Device----- S CU   UA    OS
/ Number   Type+    S Num  Range Access+  N Description                      I

_ 6300,128 3390B    0 0130 00-7F ALL      N ________________________________ Y
_ 6380,128 3390A    1 0130 80-FF ALL      N ________________________________ Y
_ 6400,32  3390B    0 0140 00-1F ALL      N ________________________________ Y
_ 6420,64  3390A    1 0140 20-5F ALL      N ________________________________ Y
_ 6500,16  3390B    0 0150 00-0F ALL      Y ________________________________ Y
_ 6510,48  3390A    1 0150 10-3F ALL      Y ________________________________ Y
_ 6600,16  3390B    0 0160 00-0F ALL      Y ________________________________ Y
_ 6610,48  3390A    1 0160 10-3F ALL      Y ________________________________ Y
****************************** Bottom of data ********************************
```

Figure 170. Proposed Control Unit / Device List

This list proposes definition details for existing or new devices accessible by the currently processed discovered control units (0130 - 0160 from Figure 170 on page 171). In the header of this panel, you can see the control unit type and serial number of the discovered controller.

If you selected AUTO_SS_DEVNUM_SCHEME = NONE, all device numbers for new devices are prefilled with `0000`. You see a message ***Assign numbers for control units or devices. Then hit Enter.*** Exclude all devices which should not be added, and assign device numbers. Pressing Enter processes the line commands or edited fields. After pressing Enter a second time with no changes on the list, you see the

message ***Items have been processed. Review them, then press Enter.*** You are then in the normal process flow as if device numbers have been proposed.

You can accept the proposed device definitions without changes by pressing Enter. Also, you can narrow by overtyping one or more of the device ranges, but only those with a Y in column ***N*** (abbreviation for New), which indicates that the device range is not yet defined in the IODF.

Furthermore, for one or more of the listed device ranges with Y in column ***N***, you can change the ***OS Access*** and the ***Description*** fields by overtyping the values in the panel. Again, a changed OS group must be a subset of the initial OS group.

For further available actions on devices, select one or more devices using action code **/**:

- By selecting action code **i**, you can include, or with action code **e**, you can exclude the corresponding devices from autoconfiguration.
- Using action code **c** leads you to the ***Device / Processor Definition*** panel (see Figure 104 on page 122). On this panel, HCD displays a list of all defined processors that have one or more channel paths to the control unit to which the device being added or changed is attached. Here you can select the processor/CSS(s) for which you want to change the device-to-processor definition.

In both cases, either with modifications applied or with accepting the unchanged proposals, pressing Enter lets you return to the ***Discovered New or Changed Controller List***. For each successfully handled controller, its ***Processed*** field is now turned to Yes (see Figure 168 on page 169).

You can select the next controller for being auto-configured, or you can exit the dialog. Exiting the dialog saves all applied configuration changes in the target IODF.

For documenting the progress of your configuration actions, and for later reference, you can save the lists from Figure 168 on page 169, Figure 169 on page 170, and Figure 170 on page 171 in a data set using the SAVE command as described in “How to print list panels” on page 226.

How to work in unattended mode

To run the unattended fast-path mode for I/O Autoconfiguration, specify 2 （No）for option ***Show proposed definitions*** from the ***Discovery and Autoconfiguration Options*** dialog shown in Figure 167 on page 167. In this case, after pressing Enter to start the discovery process, HCD notifies the user on the ***Discovered New or Changed Controller List*** that the discovery process is started: ***CONTROLLER discovery in progress - please wait ...***. After a successful autoconfiguration run, with all proposals automatically defined without user interaction, HCD sets the ***Processed*** field in Figure 168 on page 169 to Yes for each successfully configured controller. However, if you specified policy AUTO_SS_DEVNUM_SCHEME = NONE, I/O Autoconfiguration asks you to enter your own control unit and device numbers as described in “How to apply updates to the autoconfiguration proposals” on page 169.

Prerequisites and operational considerations for using I/O Autoconfiguration

Consider the following information when exploiting the I/O Autoconfiguration functionality of HCD:

- The I/O Autoconfiguration process requires that the systems in the partitions from the LP groups are running on a zEnterprise 196 (z196) or later processor.
- The target work IODF should be equal to, or be a descendent of the active IODF. This restriction is not enforced but recommended to facilitate consistent discovery of devices. If devices need to be added to do discovery, failures may occur due to inconsistent IODFs. Hardware definitions of this active IODF will remain consistent.
- All active IODFs for the systems in a SYSPLEX should be the same. This restriction is not enforced, but allows HCD to optimize the discovery process for the different systems by reusing the defined configuration. Tokens should be in sync, prior activates should have been completed.

- Without indicating ***Force full mode discovery***, there is a limit on the number of subsequent failures. Unless force full mode discovery is requested, processing assumes that CUADD values start at 00 and continue to the last defined value in consecutive order, with no missing CUADDs.
- For DASD controllers, all newly discovered devices are assumed to be 3390 type devices, either type 3390A or 3390B.
- Switches may have port restrictions via zoning or via using a switch matrix, that limit the ability of a CHPID to connect to a destination port of a control unit interface. If such port restrictions exist within a switch, I/O Autoconfiguration may configure paths that cannot be used. If a port is discovered on a controller, it is assumed that it has access to all configured logical control units on that controller.
- Only accessible FICON CHPIDs, switches, and ports that are configured online are considered during discovery. CHPIDs connected to switches, must be fully defined and include actual values in the Dynamic entry switch ID, Entry switch ID, and Entry port fields.
- At least one system per CPC must have the ability to perform dynamic I/O configuration changes. This system needs not be part of the target LP group.
- A logical control unit containing only secondary devices in an active PPRC relationship may not be able to be discovered. The I/O processing used to determine the devices configured on a logical control unit cannot be performed on secondary devices.
- I/O Autoconfiguration is a configuration tool that configures for availability. You can use Dynamic CHPID Management (DCM) for performance management. CHPID and path selection of I/O Autoconfiguration minimizes or even eliminates single points of failure for newly discovered logical control units. DCM manages the performance by adding CHPIDs and paths to the logical control units as needed.
- Within a target LP group, I/O Autoconfiguration proposes definitions only for controllers that are consistently defined or absent for the target LP group systems in the base IODF. If a controller is partially defined in the LP group, meaning that some systems have logical control units and devices configured that others do not have, I/O Autoconfiguration does not propose definitions for the systems within the LP group that do not have the control units. In such a situation, you can control the target discovery scope using LP groups that contain only systems which require the definition.
- If candidate access lists currently exclude an LPAR from accessing a control unit already defined on a CSS, I/O Autoconfiguration does not discover and add that control unit. Therefore, it is recommended that all systems in the participating LP groups should have a homogeneous view of the devices and control units. If this is not the case, you can update device candidate lists in HCD to add devices and control units to the desired LPARs before you start I/O Autoconfiguration.
- If switches are connected such that it would be possible to have three or more switches in a path to a control unit, it is possible that this path would be chosen if no viable alternative exists.
- HCD requires that either all or none of the switches and ports in the path from the CHPID to the control unit are defined in the target IODF. Otherwise, path validation may report errors.
- Discovery attempts should be performed during times where changes are minimal. ACTIVATE processing and CF CHP commands may affect discovery processing and should be avoided as far as possible.
- I/O Autoconfiguration can write diagnostic messages to the SYSLOG to help understand the processing decisions. To enable this, add the TRAPS NAME(IOSZDACMSGS) statement to the DIAGxx member that is currently in use and then issue the SET DIAG=xx command to refresh the current settings. See *z/OS MVS Initialization and Tuining Reference* for information on the TRAPS NAME() keyword.
- When performing autoconfiguration for a processor, consider including LPARs on all CSSs on the processors in the discovery scope (using the AUTO_SUG_LPGROUP option). Note that if only a single CSS is requested in the scope of the discovery and autoconfiguration option, subsequent attempts to discover and autoconfigure on other CSSs for that same processor may experience *resources exceeded* conditions when spanned CHPIDs are in use. If the discovery must use the scope of a single CSS, discovered control units and devices may need to be manually copied to the other CSSs using HCD panels.
- Several devices are required for the discovery process. The active configuration must have devices available for discovery for all target systems. Requirements include a free range of 256 consecutive

device numbers to be used for disk exploration, a free range of 16 consecutive device numbers to be used for tape exploration, and another single free device to be used to explore the fabric for controllers.

- During a discovery process, avoid removing or adding systems to the sysplex. This could cause the active discovery attempt to fail. If you need to IPL or remove a system in the sysplex, you can exit the I/O Autoconfiguration process and resume it once the systems have been IPLed or removed.
- If a discovery would produce a proposal containing a two-byte link address for a control unit, hinting to a switch connection for this control unit, but no switch definition is found in the IODF, then the proposal fails. HCD issues a message containing the missing switch address. Users must now first define the switch using the reported switch address and then repeat the discovery. HCD then performs the control unit's connection to the switch automatically.
- If a proposal for a control unit contains a switch port that is defined as uninstalled or occupied in the IODF, HCD automatically changes the switch port to either installed or not occupied and then defines the connection.
- When a mixture of switched and directly attached paths to a control unit are found, path proposal processing only creates a set of all switched paths or all directly attached paths. Path proposal processing favors directly attached paths over switched paths in most cases, except for when a set of switched paths can satisfy the number of requested static paths when not enough directly attached paths are available for proposal.

Chapter 9. How to activate or process configuration data

Overview

This information unit describes how to:

- “Build a production IODF” on page 176
- “Build an IOCDS” on page 179
- “Build processor cluster IOCDSs” on page 181
- “Manage processor cluster IPL attributes” on page 184
- “Build an IOCP input data set” on page 185
- “Create JES3 initialization stream checker data” on page 191
- “Build I/O configuration data” on page 192
- “Verify an I/O configuration” on page 193
- “Activate a configuration dynamically” on page 195
- “Activate a configuration sysplex-wide” on page 199
- “Activate a configuration HMC-wide” on page 203
- “Activate a configuration on systems not running HCD” on page 209
- “Build a CONFIGxx member” on page 212
- “Process the Display M=CONFIG(xx) command” on page 214
- “Switch IOCDS for next POR” on page 214
- “Specify an IODF for IPL” on page 216

Before the channel subsystem and the operating system can use the configuration that you have defined with HCD, you must build a production IODF from the work IODF.

With the production IODF, you can perform the following tasks in preparation for IPL or for dynamic activation.

- Build an input/output configuration data set (IOCDS) from the production IODF for processors not configured in a processor cluster. The configuration can then be used by the channel subsystem.
- Build IOCDSs of central processor complexes (CPCs) configured in a processor cluster.
- Manage IPL attributes of central processor complexes (CPCs) configured in a processor cluster.
- Build an input data set for the input/output configuration program (IOCP) from the production IODF.
- Create data for input to the JES3 Initialization Stream Checker. This checker program ensures that the data used by MVS is consistent with the data used by JES3. (This task can also be done with a work IODF.)
- Build an OS configuration data set from the production IODF. For VM this is an HCPRIO input data set.
- Verify the configuration described in an IODF against a system.
- Activate the configuration dynamically using one of the activate functions (locally, sysplex wide, HMC-wide, or remotely on a system not running HCD).
- Build a CONFIGxx member for a system from the I/O definitions in an IODF.
- Compare the information in the CONFIGxx member of a system of the sysplex with the existing configuration on that system.
- Switch the IOCDS for the next POR

© Copyright IBM Corp. 1994, 2022

Build a production IODF

Although HCD validates configuration data as it is entered, a complete validation may not be performed, because data may not be defined at this time. Therefore, a "post-validation" is performed at "Build Production IODF" time. This validation might issue messages you have to deal with, according to their severity. The production IODF is not created if any errors with a severity higher than 'warning' are produced.

During the validation HCD invokes the IOCP program to perform checking of the channel packaging rules. Therefore, note that the correct version of the IOCP program must be accessible.

Depending on what is defined in the configuration, the work IODF must contain a definition for at least one operating system, *or* one processor, *or* one switch.

- For an MVS operating system, the IODF must contain at least one EDT and one device.

  For a VM operating system, the IODF must contain at least one device as console.
- For a processor, the IODF must contain a definition for at least one partition.

Note

A production IODF must have a single extent. If the production IODF has multiple extents, the IPL process results in a WAIT state (wait state code '0B1', reason code '002'). HCD issues error message CBDA009I if a production IODF cannot be built in a single extent.

You can use production IODFs with multiple extents for dynamic activation only. In this case, HCD warns you with message CBDA009I that an IPL with this IODF is not possible, but dynamic activation continues.

To build a production IODF, perform the following steps:

1. On the HCD entry panel, select ***Activate or process configuration data***.

```
           Activate or Process Configuration Data


 Select one of the following tasks.

 __  1.  Build production I/O definition file
     2.  Build IOCDS
     3.  Build IOCP input data set
     4.  Create JES3 initialization stream data
     5.  View active configuration
     6.  Activate or verify configuration
         dynamically
     7.  Activate configuration sysplex-wide
     8.  (no longer supported)
     9.  (no longer supported)
     10. Build I/O configuration data
     11. Build and manage processor cluster
         IOCDSs, IPL attributes and dynamic I/O
         changes
     12. Build validated work I/O definition file

  F1=Help     F2=Split    F3=Exit     F9=Swap
 F12=Cancel
```

   Figure 171. Activate or Process Configuration Data

2. From the resulting panel, select ***Build production I/O definition file***. Prior to actually building the production or validated work IODF, HCD updates the work IODF in the following way:
   - For processors, that must be defined for a maximum HSA, it extends the processor configuration to its maximum. This means, HCD ensures that all logical channel subsystems as well as all partitions are defined for the processor, and that each channel subsystem allows for the maximum number of devices per subchannel set.
   - For every primary operating system configuration that specifies the name of a disaster recovery (D/R) site operating system configuration, HCD generates the D/R site OS configuration.

Thereafter, HCD validates the configuration data in the work IODF. If the work IODF is valid, then a production IODF or validated work IODF can successfully be built.

HCD also invokes the IODF checker function that performs a health check of the IODF. In case of defects, HCD issues a severe warning message.

For work IODFs containing XMP processor definitions, before you can build a production IODF, the correct PCHIDs must be defined in the work IODF. You can use the CHPID Mapping Tool to achieve the task to either insert missing PCHIDs or to update PCHIDs in a work IODF. However, inserting or updating PCHIDs into an IODF using the CHPID Mapping Tool is only possible with a so-called ***validated work IODF*** that you can get in one of two ways:

a. Use the task ***Build validated work I/O definition file***. This task validates a work IODF for correctness and completion, and may issue messages that describe incomplete or erroneous logical definitions. Missing PCHID values are not flagged as errors. If errors occur, correct them an restart this task. As soon as no more errors occur, the output from this task is a validated work IODF.
b. If you tried to build a production IODF without being aware of one or more missing PCHIDs for XMP processors, but the work IODF satisfies all other validation rules, then the output from ***Build production I/O definition file***, too, is a validated work IODF. A message will show all CHPIDs for which the required PCHIDs are missing.

With a validated work IODF, you can use the CHPID Mapping Tool to accomplish the task to update or insert required PCHIDs. Input to this tool is an IOCP input data set. To get this input, now use the task ***Build IOCP input data set*** from the panel shown in Figure 171 on page 176. This leads you to the ***Build IOCP Input Data Set*** panel shown in Figure 182 on page 186. Because the input to the CHPID Mapping Tool must be a stand-alone IOCP, in this panel, specify the appropriate option as shown:

```
Input to Stand-alone IOCP?  Yes  (Yes or No)
```

How to proceed using the CHPID Mapping Tool to get PCHIDs inserted or updated in the validated work IODF, see “How to interact with the CHPID Mapping Tool” on page 189. As soon as all PCHIDs are correct in the validated work IODF, the production IODF can be built.

3. If you initially requested activity logging, a panel like the one shown in “Activity logging and change logging” on page 45 is displayed. Enter the activity logging details your installation requires. The Build Production I/O Definition File screen is displayed.

```
             Build Production I/O Definition File


 Specify the following values, and choose how to continue.

 Work IODF name . . . : 'DOCU.IODF01.WORK'

 Production IODF name . 'DOCU.IODF01'
 Volume serial number . DATA01  +

 Continue using as current IODF:
 2   1.  The work IODF in use at present
     2.  The new production IODF specified above



  F1=Help    F2=Split   F3=Exit    F4=Prompt  F9=Swap   F12=Cancel
```

Figure 172. Build Production I/O Definition File

The selection of option `Continue using as current IODF` controls which IODF is in access after the production IODF has been built. In addition, if you select option 1, `The work IODF in use as present`, the content of the currently built production IODF is copied to the work IODF. This ensures that the work IODF contains the latest configuration tokens of the IODF, and you can continue to use the work IODF for further updates. If you select option 2, `The new production IODF specified above`, the content of the production IODF is not mapped into the work IODF. In that case, you should start from the newly built production IODF when performing further changes to the I/O configuration.

4. Specify the name and volume serial number (if applicable) for the production IODF. “IODF naming convention” on page 29 describes the syntax of a production IODF name. If you choose a name without complying to the prescribed syntax of a production IODF name, that IODF can not be used for the IPL and dynamic activate. Moreover, to perform a dynamic activate, the high-level qualifier of the production IODF has to be the same as the one of the IODF used for the previous IPL or dynamic activate.

   If the data set name for the production IODF does not adhere to the naming convention for a production IODF, the Confirm Production IODF Name panel is displayed, and you must confirm the IODF name.

```
                  Confirm Production IODF Name


 The data set name you specified does not follow the naming
 convention for production IODFs.  You will not be able to IPL
 or ACTIVATE a system configuration from an IODF with this data
 set name.

 Confirm the specified IODF name . . 1_  1.  Yes
                                         2.  No

  F1=Help      F2=Split     F3=Exit      F9=Swap     F12=Cancel
```

   Figure 173. Confirm Production IODF Name

   If you use the same name for the new IODF as for an existing IODF, you can replace the existing IODF. In that case, the Confirm Delete I/O Definition panel is shown. Select `yes`, to confirm deletion of the IODF. Be careful, not to delete the active IODF. If you have specified the name of the active IODF, another confirmation panel is shown that warns you once more about the effect of the chosen name.

```
                Confirm Delete I/O Definition File


To confirm delete request, select Yes. To cancel delete request,
select No.

Delete request confirmed . . . __  1.  Yes
                                   2.  No

Creation date  . . : 1997-06-10
Last update  . . . : 1997-09-10  14:19
Volume . . . . . . : SMS012

Description  . . . : IODF for raised floor 710
                     For systems D0, D2, D4 and D6
                     incl. sensed data and mig. SW data


 F1=Help    F2=Split   F3=Exit    F9=Swap   F12=Cancel
```

   Figure 174. Confirm Delete I/O Definition File

5. After pressing Enter, the Define Descriptor Fields panel appears.

```
                    Define Descriptor Fields


Specify or revise the following values.

Production IODF name  . : 'DOCU.IODF01'

Descriptor field 1  . . . DOCU
Descriptor field 2  . . . IODF01

 F1=Help   F2=Split   F3=Exit   F5=Reset   F9=Swap   F12=Cancel
```

   Figure 175. Define Descriptor Fields

Specify the `descriptor field 1`, 2, or leave the default values. The descriptor fields describe the IODF and will be part of the HSA token. **Attention:** If you specify asterisks (**), equals (==), pluses (++), or minuses (--) for the IODF suffix in LOADxx, never change the default descriptor field values, because z/OS uses these values to find the current IODF during IPL. Take this relationship also into consideration, if you copy the IODF to a different data set name. For further details refer to *z/OS HCD Planning*. After the production IODF is built, HCD displays a message.

6. If the work IODF has an activity log file defined for the work IODF, it is copied. After the production IODF has been built, HCD informs you that the production IODF has been created.

You can also create a production IODF using the HCD batch facility (for details see "Build a Production IODF" on page 295).

Note:

If the work IODF has an associated MCF, the MCF data set is copied and associated to the production IODF.

Build an IOCDS

When a production IODF has been created, you can build an IOCDS (it can be built only from a production IODF). Processors may have varying numbers of IOCDSs. A particular IOCDS is used at POR time to make the configuration data known to the CSS.

The following procedure is only recommended for processors that do *not* have an SNA address defined, including processors configured in a processor cluster. For processors in a processor cluster *with* an SNA address defined, use the procedure described under "Build processor cluster IOCDSs" on page 181.

While building IOCDSs HCD internally calls the IOCP program. Therefore, note that HCD must be installed in an APF-authorized library.

1. On the ***Primary Task Selection*** panel, specify the name of a production IODF and select ***Activate or process configuration data***.
2. From the resulting panel select ***Build IOCDS***. HCD displays the Processor List.
3. On the Processor List, select the processor and press the Enter key. HCD displays the IOCDS List.

```
                          IOCDS List
  Goto  Backup  Query  Help
------------------------------------------------------------------
                                                        Row 1 of 4

Select one or more IOCDSs, then press Enter.

Processor ID . . : P101

                           --Last IOCDS Update--
/ IOCDS  Name     Format  Date         Time
_ A0
_ A1     IODF05   BASIC   2010-01-28   14:27:38
_ A2     IODF03   BASIC   2010-02-21   16:41:19
_ A3
```

Figure 176. IOCDS List for locally building the IOCDS

The IOCDS list shows those IOCDSs that are built using the currently accessed production IODF.

4. Whenever the IOCDS list is invoked, HCD tries to get actual IOCDS data (e.g. date and time of last update) for processors with SNA addresses directly from the support element (SE) and displays it.

   IODF data is shown only if the SE does not provide information or where an SNA address is not defined.

   A production IODF is updated with data retrieved from the SE if discrepancies between that data and the stored IODF data are detected.

5. On the IOCDS List, select the IOCDSs that you want to update and select ***Update IOCDS*** from the context menu (or action code **u**). HCD displays the Build IOCDS panel.

```
Build IOCDS


Specify or revise the following values.

IODF name . . . . . . . . . : 'SYS1.IODF02'
Processor ID  . . . . . . . : PROC2        IOCDS  : A0

Title1  . ____________________________________________________________
Title2  : SYS1.IODF02 - 2009-12-12 14:52

Dualwrite  . . . . . . . . . . . . . . No          Remote Write   No
Switch IOCDS for next POR  . . . . . . No
Write IOCDS in preparation of upgrade  No

Job statement information
//WIOCDS  JOB (ACCOUNT),'NAME'
//*
//*
//*
//*
//*
 F1=Help     F2=Split    F3=Exit     F5=Reset    F9=Swap    F12=Cancel
```

Figure 177. Build IOCDS

On this panel, you can:

- Into the `Title1` field enter identification information you want to be written on the first header line of the IOCP input data set. The first eight characters are used as IOCDS name. This input is used as the MSG1 parameter value of the IOCP ID statement. The batch job passes the MSG1 parameter to the IOCP input data set via the HCDCNTL DD statement (see Figure 254 on page 299 and Figure 255 on page 299).
- Specify the `Dualwrite` option that describes whether the IOCDS is to be updated on both sides of a physically partitioned processor.
- Specify whether you want to perform a remote or local write of an IOCDS for a processor that has a SNA address defined. The `Remote Write` option is initialized with 'Yes' if a SNA address is defined to the selected processor. In such a case, HCD initiates a remote IOCDS build and write to the support element with the designated SNA address. If the option is changed to 'No', a local IOCDS build is performed.
- Specify the `Switch IOCDS for next POR` option, that means whether you want to make this IOCDS the active one for the next power-on reset (POR).
- Specify whether to `Write IOCDS in preparation of upgrade`. This specifies whether an IOCDS is to be written regardless of processor type. This is useful to prepare for a processor upgrade.

  If `Yes` is specified, an IOCDS for the selected processor is written regardless of the processor type. For a list of processors that support writing an IOCDS, in preparation for a processor upgrade, or for which such an IOCDS can be written, see “Supported hardware report” on page 358.

  Note: If, as a result of a processor upgrade, an IOCDS download is not possible you can, after having built the production IODF, create an IOCP input data set that can be used with the stand-alone IOCP to generate an IOCDS for use with POR.
- Change the job statement information to meet the installation needs. Note that a batch job to build an IOCDS must run on the processor on which the IOCDS is to be updated. (See “Job statement information used in panels” on page 64 for a description of the job control information that you need to specify when you build an IOCDS.)

  In a multiprocessor JES environment, be sure to specify the JES command and/or job class to ensure that the job runs on the correct processor(s).

The recommended region size is 2 MBytes more than the IOCP needs. For the region size required by IOCP, refer to the *IOCP User's Guide* for your processor.

6. When an IOCDS is built, a record is written for the processor configuration. If you build a new IODF from an existing IODF, the records are copied to the new IODF. When you build IOCDSs from this new IODF, the IOCDSs from the old IODF are also shown on the IOCDS list. Because the batch job requires exclusive use of the production IODF for processors that have *no* SNA address specified, you have to either leave the HCD session or change the currently accessed IODF to run the submitted job.

You can also invoke the ***Build IOCDS*** task in batch mode, see "Build an IOCDS or an IOCP input data set" on page 297.

Note:

1. Unlike writing an IOCDS using the IOCP program, the HCD process generates no IOCP report when using the ***Build IOCDS*** function.
2. When a processor has been upgraded in the IODF, the old IOCDS status data in the IODF is deleted.

Using this procedure for processors with an SNA address:

If you use this procedure for processors in a processor cluster *with* an SNA address defined, HCD does the following:

- HCD writes the IOCDS for that processor to the support element with the designated SNA address (remote IOCDS build).
- If you run the job under z/OS, HCD writes the IOCDS for that processor to the support element with the designated SNA address.

To run the batch job, you do not have to leave the HCD session. If the processor has defined an SNA address, HCD assumes that it is part of a processor cluster. In this case, the job can immediately start without the need to free the currently accessed IODF.

HCD tries to update the IOCDS record but is not able to because the IODF is still allocated by the HCD dialog. This results in an error message on the console log. To avoid this error message, HCD offers the profile option of bypassing the IODF information update (see "Bypass IODF information update for SNA processor" on page 23).

Build processor cluster IOCDSs

The following procedure describes how to build an IOCDS for processors in a processor cluster *with* an SNA address defined.

To build IOCDSs within a processor cluster:

- The SNA address has to be defined for a CPC configured in a processor cluster
- Specific RACF authority has to be attained (for details on required access authority, refer to "Security-related considerations" on page 321).
- The operating system must not be running as a guest under z/VM.

Perform the following steps:

1. On the ***Primary Task Selection*** panel, select ***Activate or process configuration data*** and from the resulting panel select ***Build and manage processor cluster IOCDSs, IPL attributes and dynamic I/O changes***. The ***Processor Cluster List*** is displayed:

```
  Goto  Query  Help
------------------------------------------------------------------------------
                            Processor Cluster List                 Row 1 of 18
Command ===> ___________________________________________________ Scroll ===> PAGE

Select one or more CPCs, then press Enter.

   --------------CPC--------------   IODF
 / SNA Address        Type   Model   Processor ID
 s IBM390PS.DAN2      2094   S28     DAN2
 s IBM390PS.ECL2      2097   E40     ECL2
 _ IBM390PS.G14       2084   B16     G14
 _ IBM390PS.G15       2084   D32     G15
 _ IBM390PS.H05       2097   E26     H05
 _ IBM390PS.H37       2097   E26     H37
 _ IBM390PS.H42       2097   E26     H42
 _ IBM390PS.POL1      2096   S07     POL1
 # IBM390PS.P0ZGMR04
 _ IBM390PS.P0000H27  2097   E56     H27
 # IBM390PS.RAP       2066   004
 _ IBM390PS.R17       2817   M32     R17
 v IBM390PS.R35       2817   M49     R35
 _ IBM390PS.R37       2817   M32     R37
```

Figure 178. Processor Cluster List

This panel shows all CPCs configured in a processor cluster. They are identified by the SNA address of their support element and displayed together with their Type and Model as well as the Processor ID in the IODF. The SNA address has been specified in the processor definition task for the IODF processor definitions and enables the relation to the configured CPCs.

A disabled sign (#) in the action entry field can be due to:

- SNA address not defined in the IODF. In this case, the IODF Processor ID shows no value. Either define the SNA address for a corresponding processor in the accessed IODF or use another IODF.
- SE (support element) of CPC did not respond. In this case, the CPC Type and Model fields show no values.

A processor ID followed by two dots (`..`) indicates that this SNA address has been defined for several processors in the IODF. The first processor ID (in alphabetical order) with the SNA address is displayed. If you want to apply any of the group actions on another processor, use ***Select other processor configuration*** from the context menu (or action code ***p***).

2. On the ***Processor Cluster List***, select the CPCs for which you want to build and manage the IOCDSs and ***Work with IOCDSs*** from the context menu (or action code **s**). HCD displays the IOCDS List (shown with sample data):

```
  Goto  Query  Help
------------------------------------------------------------------------------
                                  IOCDS List          Row 1 of 8 More:       >
Command ===> ___________________________________________________ Scroll ===> PAGE

Select one or a group of IOCDSs, then press Enter.

                                          -----Token Match----- Write
 / IOCDS       Name     Type   Status     IOCDS/HSA IOCDS/Proc. Protect
 _ A0.DAN2     052DAN2  LPAR   POR        Yes       Yes         Yes-POR
 _ A0.ECL2     062AECL2 LPAR   Alternate  No        No          No
 u A1.DAN2     021ADAN2 LPAR   Alternate  No        No          No
 _ A1.ECL2     054AECL2 LPAR   Alternate  No        Yes         No
 _ A2.DAN2     025ADAN2 LPAR   Alternate  No        No          No
 _ A2.ECL2     059AECL2 LPAR   Alternate  No        No          No
 _ A3.DAN2     026ADAN2 LPAR   Alternate  No        No          No
 _ A3.ECL2     062AECL2 LPAR   POR        No        No          Yes-POR
```

Figure 179. IOCDS List invoked from the Processor Cluster List

On the IOCDS List, all applicable IOCDSs of the selected CPCs are displayed and arranged in ascending order by IOCDS names (starting, for example, with *A0*-IOCDSs, *A1*-IOCDSs). This list enables you to apply the IOCDS functions as group actions against one or several IOCDSs for all selected processors.

The data displayed is retrieved directly from the support elements. If, however, the support element does not answer, HCD displays the data saved in the IODF and issues a message accordingly.

A production IODF will be updated with data retrieved from the support element if discrepancies between that data and the stored IODF data are detected. A work IODF will remain unchanged.

The `Type` field contains one of the following types of power-on reset modes to be used with the I/O configuration defined in the IOCDS: S/370, ESA/390, or LPAR.

The `Status` field indicates the status of the IOCDS:

`Alternate`
not to be used at the next POR

`POR`
to be used at the next POR

`Invalid`
IOCDS is opened for update

The `Token Match-IOCDS/HSA` field indicates whether the IOCDS token matches the current HSA token. If `Yes` is shown, it means that the IOCDS has been built by HCD, and that it matches the current I/O configuration - either because this IOCDS was used for the last POR, or the matching configuration has been activated dynamically.

The `Token Match-IOCDS/Proc.` field indicates whether the IOCDS token matches the processor token in the IODF, currently used in the HCD dialog. If `Yes` is shown, the IOCDS has been built from the IODF currently used in the HCD dialog.

3. On the IOCDS List, you can select the following actions from the context menu:
   - Use the ***Update IOCDS*** action (or action code **u**) to build or update the selected IOCDSs with the I/O configuration data from the currently accessed production IODF. See step "4" on page 183 on how to proceed.
   - Use the ***Switch IOCDS*** action (or action code ***s***) to mark an IOCDS as the IOCDS that is used for the next POR. The `Status` field will be set accordingly.

     You can only switch to an IOCDS that has an IOCDS/HSA token match or to an IOCDS of a processor that is not activated ('POR-required' status).
   - Use the ***Enable write protection*** or ***Disable write protection*** action (or action codes ***e*** and ***w***) to allow or prohibit updating the selected IOCDSs of the designated CPCs. The Write Protect field will be set accordingly.

   Use the F20=Right key to move the screen to the right to see information such as date and time of the last IOCDS update and the IOCDS configuration token.
4. If you select the ***Update IOCDS*** action, HCD displays the Build IOCDSs dialog.

```
                              Build IOCDSs
                                                                Row 1 of 1
Command ===> ___________________________________________ Scroll ===> PAGE

Specify or revise the following values.

IODF name . . . . . . . . . : 'SYS1.IODF01'

Title1 . ____________________________________________________________
Title2 : SYS1.IODF01 - 2011-02-24 09:40

                            Write IOCDS in
IOCDS        Switch IOCDS   preparation of upgrade
A1.DAN2      No             No
**************************** Bottom of data ******************************

 F1=Help        F2=Split       F3=Exit        F5=Reset       F7=Backward
 F8=Forward     F9=Swap       F12=Cancel     F22=Command
```

Figure 180. Build IOCDs

On this panel you can:

- Enter identification information you want to be written on the first header line of the IOCP input data set in the `Title1` field.
- Specify the `Switch IOCDS` option, if you want to make this IOCDS the active one for the next power-on reset (POR).
- Specify whether to `Write IOCDS in preparation of upgrade`. This specifies whether an IOCDS is to be written regardless of processor type. This is useful to prepare for a processor upgrade.

  If `Yes` is specified, an IOCDS for the selected processor is written regardless of the processor type. For a list of processors that support writing an IOCDS, in preparation for a processor upgrade, or for which such an IOCDS can be written, see "Supported hardware report" on page 358.

  Note: If, as a result of a processor upgrade, an IOCDS download is not possible you can, after having built the production IODF, create an IOCP input data set that can be used with the stand-alone IOCP to generate an IOCDS for use with POR.

5. After pressing the Enter key on the Build IOCDSs panel, the Job Statement Information panel is displayed. Specify the information for the batch job that HCD generates to build the IOCDSs.

   The recommended region size is 2 MBytes more than the IOCP needs. For the region size required by IOCP, refer to the *IOCP User's Guide* for your processor.

Manage processor cluster IPL attributes

For IPL operations for CPCs configured in a processor cluster, you can:

- Display the IPLADDR and IPLPARM attribute values of the last and for the next IPL.
- Modify IPLADDR and IPLPARM attribute values to be used for next IPL.

Perform the following steps:

1. On the ***Primary Task Selection*** panel, select ***Activate or process configuration data*** and from the resulting panel, select ***Build and manage processor cluster IOCDSs, IPL attributes and dynamic I/O changes***. The ***Processor Cluster List*** is displayed (see Figure 178 on page 182).
2. On the ***Processor Cluster List*** select the CPCs for which you want to view and modify IPL attributes.
3. Select the ***Work with IPL attributes*** action from the context menu (or action code **i**). HCD displays the IPL Attribute List.

```
                           IPL Attribute List

                              IPL Attribute List      Row 1 of 6 More:       >
Command ===> ______________________________________________ Scroll ===> PAGE


Update the values to be used for the next IPL and press Enter. To view the
values used for the last IPL, scroll to the right.

                             ----------------Next IPLPARM------------------
Processor  Partition  IPL    IODF  LOADxx  Prompt/Msg  Nucl     Unformatted
ID         Name       ADDR   Dev   Suffix  Option      Suffix   IPLPARM

H05        LIN1       4800   1     __      _           _        1
H05        LIN2       4801   ____  __      _           _        _______
H05        BVM1       A140   0EA0  __      _           _        0EA0
H05        COM1       1A00   1A10  F1      _           _        1A10F1
H05        COM2       1A01   1A10  FA      A           2        1A10FAA2
H05        AVM4       A100   CONS  SY      S           G        CONSSYSG
 *************************** BOTTOM OF DATA ********************************
```

Figure 181. IPL Attribute List

The IPL Attribute List displays the IPLADDR and IPLPARM attribute values for all selected processor definitions and their partitions that are obtained from the support element of the associated CPCs.

4. On the ***IPL Attribute List***, view or modify the attribute values for IPLADDR and IPLPARM.

   Use F20=Right to move the screen to the right to view the IPL attributes used for the last IPL.

   The ***IPL ADDR*** column shows the LOAD address used for next IPL.

   The ***Next IPLPARM*** column shows the LOAD parameter used for z/OS and is a concatenation of the following attributes: IODF Device, LOADxx Suffix, Prompt/Message Option, and Nucleus Suffix. An additional column shows unformatted IPL parameters. You can use these unformatted values to specify non z/OS IPL parameters, for example, for z/VM or Linux® on IBM Z for the next IPL. This unformatted string can be up to eight characters long. HCD does not perform any semantic checks of these values, as the content depends on the operating system for which they are used.

   When providing input to the unformatted IPL parameters, you must specify the value at the correct position in the string. For non-specified leading or intermediate characters, use a period (.) instead of a blank, since blanks are removed by ISPF.

   You cannot type values into both the left four columns and the right ***Unformatted*** column of ***Next IPLPARM***. If you provide values into the ***Unformatted*** column, they are transferred into the left four columns.

   The ***IPL ADDR*** and/or the ***Next IPLPARM*** values for the next IPL are taken, when 'Use dynamically changed IPL address' and/or 'Use dynamically changed IPL parameter' are selected on a LOAD profile that is used to initiate an IPL, or to activate an operating system. This enables you to change the values of IPLADDR and IPLPARM without updating the profile.

Build an IOCP input data set

Sometimes it is necessary to build an IOCP input data set:

- If you have to use the stand-alone IOCP program, which does not support direct access to the production IODF.
- If you want to create a backup on tape in case you need to recover the contents of the IOCDS in the service processor.
- If you need an IOCP input data set as input to the CHPID Mapping Tool in order to map CHPIDs to PCHIDs for XMP processors.
- If you need an IOCP input data set for a processor on which there is no HCD running (e.g. a new processor). Also, if you upgrade a processor to a model that results in a new IOCP SYSTEM value and the processor does not support an IOCDS write in preparation for a processor upgrade, you have to run the stand-alone IOCP program.

How to build an IOCP data set

1. On the ***Primary Task Selection*** panel, specify the name of a production IODF and select ***Activate or process configuration data***.
2. On the resulting panel select ***Build IOCP input data set***. HCD displays the Available Processors screen.
3. On the Available Processors screen, select the processor for which you want to build the IOCP input data set. HCD displays the Build IOCP Input Data Set dialog.

```
                      Build IOCP Input Data Set

 Specify or revise the following values.

 IODF name . . . . . . . . . . : 'BOKA.IODF08'
 Processor ID  . . . . . . . . : CF01
 Title1 : ________________________________________________________________
 Title2 : BOKA.IODF08 - 2009-07-02 15:42

 IOCP input data set
 ____________________________________________________
 Input to Stand-alone IOCP?  Yes  (Yes or No)

 Job statement information
 //WIOCP   JOB (5765),'BOKA',NOTIFY=BOKA,CLASS=A,MSGCLASS=X,REGION=5M
 //JOBLIB     DD   DSN=HCDTEST.IZPIOCP.FALC,DISP=SHR
 //GO.HCDPROF DD   DSN=HCDTEST.PROFILE(MIGENH51),DISP=SHR
 //*
```

Figure 182. Build IOCP Input Data Set

4. On this panel you can:
   - Enter the identification information you want to be written on the first header line of the IOCP input data set in the `Title1` field.
   - Specify the name of the IOCP input data set. The IOCP input data set will automatically be allocated (record length 80, record format fixed block). If the data set already exists, you will be asked to confirm replacing it with the new one.
   - Specify whether to build the IOCP data set for stand-alone IOCP.

     Yes
     This is the default. The generated IOCP statements can be used as input to the stand-alone IOCP program or to the CHPID Mapping Tool.

     Note: You may not be able to use such a generated IOCP input data set for the migration function of HCD because, for example, the unit name of control units and device types can be truncated due to IOCP restrictions.

     No
     The IOCP input data set is built using the IOCP changes described in "IOCP enhancements" on page 187 and generating the extended migration parameters and statement (if the profile statement MIGRATE_EXTENDED is set to YES) as described in "IOCP input data sets using extended migration" on page 187. Note that if you try to process these IOCP statements with the stand-alone IOCP program, you may run into problems, because the program may not accept the generated syntax.
   - Change the job statement information to meet the installation needs. With JCL overwrite statements you can modify the EXEC procedure that is invoked. You can, for example, specify the HCD profile using the job step name GO. (See "Job statement information used in panels" on page 64 for a description of the job control information that you need to specify when you build an IOCP input data set.) Ensure that the batch job runs in a region with at least 4 MBytes.

TOK=value

Configuration programs use this keyword to forward information to the CPC which is required to enable the dynamic I/O configuration capability of any resulting IOCDS. This keyword is not intended for direct user input. The contents needs not relate to the target processor. It just must match the token in the IOCDS/HSA and the currently active IODF.

You can also invoke this task in batch mode. See "Build an IOCDS or an IOCP input data set" on page 297.

Note:

You should never change an IOCP input file generated by HCD and use it to write an IOCDS. If changes are necessary, use HCD to regenerate the IOCP input.

IOCP enhancements

The generated IOCP data set contains control unit and device types of 8 characters and a device model of up to 4 characters. Such an IOCP input data set can be processed by IOCP and remigrated to HCD without the need to correct the control unit and device types that exceed the 5 character UNIT and 2 character MODEL value limitation.

It also now contains an all-character readable token which allows the user to preserve the dynamic capability when performing a stand-alone IOCP run on a processor cluster CPC using IOCP input from diskette.

Important Note:

It may not be possible to remigrate an IOCP input data set generated by HCD back into the IODF. The reasons are:

- HCD uses the High Level Assembler program for parsing the IOCP statements. The High Level Assembler earlier than V1.5 is restricted to 255 characters for any keyword value. IOCP statements, however, may contain keywords with a value greater than 255 characters. High Level Assembler V1.5 removes this restriction.
- HCD keeps additional data for a processor configuration that is not contained in an IOCP input data set. This data may be used for validation and, therefore, missing at the migrate step leading to validation errors. For example, the partition usage is defaulted to CF/OS. For a shared CF peer channel, this may lead to a validation error, because only a CF partition may be specified in the access or candidate list.
- Since the IOCP data are only a subset of the processor configuration data, you may lose this additional configuration data if you update a processor configuration from an IOCP input data set.
- IOCP data sets do not contain devices connected to a processor with a null device candidate list because of IOCP rules. If the device is connected to another processor with the same control unit, this is an ambiguous configuration and is not migrated.

For updating the IODF via I/O configuration statements, it is recommended to use the extended I/O configuration statements of HCD instead of an IOCP input data set (see “IOCP input data sets using extended migration” on page 187).

IOCP input data sets using extended migration

As described in “Updating parts of a configuration by migrating input data sets” on page 273, HCD introduces an extended migration to allow you to define your complete configuration without using the ISPF front end dialog.

For example, the extended migration allows you to define a switch with its ports or define serial numbers and descriptions for devices and control units by editing your input data sets and migrating them into HCD.

Analogously, when building an IOCP input data set from an IODF, information is generated that describes the additional parameters of the configuration objects (if the prerequisites under “Prerequisites to exploit the extended migration” on page 188 are met). Within the generated IOCP input data set, the additional parameters and control statements are shown as comments with special HCD tags so that they can be processed by the IOCP program. When re-migrating such an IOCP input data set to HCD, the tagged comments are identified by HCD and migrated correspondingly.

If you want to use the input data set for both, IOCP processing and HCD migration, the new records must apply to the following rules, so that they can be processed by both programs:

- The new parameters start with the string *$HCDC$ in column 1.
- The new SWITCH statement starts with the string *HCD in column 1.
- The IOCP statement does not have any comment.
- The additional HCD tagged records follow immediately the last record of the corresponding IOCP statement.

- The first keyword starts at column 16.
- The last operand is not followed by a comma.
- There is no comment to the right of the operand.

Prerequisites to exploit the extended migration

To generate the additional keywords during IOCP data set build, note the following prerequisites:

- Specify the following entry in the HCD profile:

  ```
  MIGRATE_EXTENDED = YES
  ```

  When you specify `MIGRATE_EXTENDED = NO` (which is default), the additional keywords are not generated during IOCP build. In addition, when remigrating the IOCP input data sets, the migration function ignores the commented '*$HCDC$' and '*HCD' tags.

  The HCD profile is explained in “Defining an HCD profile” on page 16.
- When building IOCP input data sets, you have to set the option `Input to Stand-alone IOCP` to No on the Build IOCP Input Data Set panel. See “Build an IOCP input data set” on page 185 for a description of the new option.

Example of an IOCP input data set

Figure 183 on page 189 shows you an example of a generated IOCP input data set with the new parameters. Note that each new parameter starts with an *$HCDC$ in column 1. The new switch control statement starts with *HCD in column 1.

```
         ID    MSG1='IOCDSNAM',MSG2='BOKA.IODF03 - 95-07-21 16:00',     *
               TOK=('TWO',00000001900096721600570400952 02F00000000,0000*
               0000,'95-07-21','16:00:57','BOKA','IODF03')
*$HCDC$        DESC='Cluster(099) test floor'
*$HCDC$        SERIAL='1044009672'
*$HCDC$        SNAADDR=(USIBMSC,TWO)
         RESOURCE PARTITION=((CF001,3),(MVSSMAL,2),(PRIME,1))
*$HCDC$        DESCL=('Coupling facility','MVS 5.2.0 System1','Producti*
               on CF image')
         CHPID PATH=(10),PARTITION=((CF001),(CF001)),TYPE=CFR
*$HCDC$        DESC='Receiver'
         CHPID PATH=(13),PARTITION=((PRIME),(PRIME)),TYPE=CFS
*$HCDC$        TPATH=(TWO,10,FFFE,FFFE)
*$HCDC$        DESC='Sender'
         CHPID PATH=(20),PARTITION=((MVSSMAL),(MVSSMAL)),SWITCH=AB,    *
               TYPE=CNC
*$HCDC$        SWPORT=((AA,C0))
*$HCDC$        DESC='Channel for DASD'
         CHPID PATH=(21),PARTITION=((MVSSMAL),(MVSSMAL)),TYPE=CNC
*$HCDC$        DESC='Channel for DASD'
         CHPID PATH=(25),PARTITION=((PRIME),(PRIME)),TYPE=CNC
*$HCDC$        SWPORT=((AB,80))
*$HCDC$        DESC='Switch connection'
         CHPID PATH=(26),PARTITION=((MVSSMAL),(MVSSMAL)),TYPE=CNC
*$HCDC$        SWPORT=((AA,C5))
*$HCDC$        DESC='Switch connection'
         CNTLUNIT CUNUMBR=0005,PATH=(25),UNITADD=((00,001)),UNIT=9032-3
*$HCDC$        SWPORT=((AB,FE))
*$HCDC$        SERIAL='1021-CU511'
*$HCDC$        DESC='SWITCH AB'
         CNTLUNIT CUNUMBR=0006,PATH=(26),UNITADD=((00,001)),UNIT=9033
*$HCDC$        SWPORT=((AA,FE))
*$HCDC$        SERIAL='1021-CU510'
*$HCDC$        DESC='SWITCH AA'
         CNTLUNIT CUNUMBR=000F,PATH=(20,21),UNITADD=((08,008)),        *
               LINK=(A1,A2),CUADD=3,UNIT=3995-151
*$HCDC$        SWPORT=((AA,C3),(AB,82))
*$HCDC$        SERIAL='5512003330'
*$HCDC$        DESC='DASD on Q4-B3'
         CNTLUNIT CUNUMBR=FFFE,PATH=(13),UNIT=CFS
         IODEVICE ADDRESS=(080,004),MODEL=151,UNITADD=08,              *
               CUNUMBR=(000F),STADET=Y,UNIT=3995
         IODEVICE ADDRESS=110,MODEL=3,UNITADD=00,CUNUMBR=(0005),       *
               STADET=Y,UNIT=9032
*$HCDC$        SERIAL='1021-CU511'
*$HCDC$        DESC='SWITCH AB'
         IODEVICE ADDRESS=120,UNITADD=00,CUNUMBR=(0006),STADET=Y,      *
               UNIT=9033
*$HCDC$        SERIAL='1021-CU510'
*$HCDC$        DESC='SWITCH AA'
         IODEVICE ADDRESS=(FFFE,002),CUNUMBR=(FFFE),UNIT=CFS
*$HCD$   SWITCH   SWID=AA,SERIAL='1021-CU510',DESC='SWITCH AA',        *
               PORT=((C0,CE),(FE,FE)),SWPORT=((CA,AB,C6)),UNIT=9033
*$HCD$   SWITCH   SWID=AB,SERIAL='1021-CU511',DESC='SWITCH AB',        *
               PORT=((80,F0),(FE,FE)),SWPORT=((C6,AA,CA)),MODEL=3,     *
               UNIT=9032
```

Figure 183. Example of an input data set for migration enhancements

Using the IOCP data set as input for the CHPID Mapping Tool

HCD will allow generating an IOCP deck that does not contain any or all necessary PCHID values. You can use this IOCP deck as input to the CHPID Mapping Tool in order to have PCHIDs inserted or updated. The CHPID Mapping Tool then generates a new IOCP input deck containing the assigned PCHID values. You can then migrate the updated PCHIDs into a validated work IODF (see also "How to interact with the CHPID Mapping Tool" on page 189).

How to interact with the CHPID Mapping Tool

Correct PCHIDs are required in the configuration for XMP processors before you can successfully build a production IODF. The task of adding or updating required, PCHID information for a work IODF for XMP processors is eased by an interaction between HCD and the CHPID Mapping Tool (CMT). Prerequisite for

this task is a so-called ***validated work IODF*** that you can get in one of two ways described in "Build a production IODF" on page 176.

You can download the CHPID Mapping Tool from the Internet. It runs on a workstation.

Process overview

Input to the CMT is the hardware configuration file (CFReport [1]) of your machine and a valid IOCP input file (with missing or obsolete PCHIDs).

Output from the CMT is again an IOCP input file that now has all missing or updated PCHID values filled in. Upload this IOCP input file and re-import it into the validated work IODF using the HCD primary task ***Migrate configuration data***.

Via this migration task, it is possible to update a validated work IODF with the PCHID values that have been written by the CMT into the IOCP input file. Other changes on the validated work IODF are not possible without loosing the status of a validated work IODF. A PCHID migration is only possible to a validated work IODF. Since PCHID migration changes the IODF, the IODF status is reset to 'not validated'. All functions that allow read-access to a work IODF are also possible for a validated work IODF. Activate functions are not possible, except for building an IOCP deck that can be used as input to the CMT. Only after all PCHIDs have been inserted into the validated work IODF, you can successfully build a production IODF.

How to insert or update PCHIDs

Here are the detailed steps you need to perform to insert or update PCHIDs in a validated work IODF.

1. Create a validated work IODF with one of the two methods described in "Build a production IODF" on page 176. Your validated work IODF may lack at least one PCHID that you need to insert or may contain obsolete PCHIDs that you want to update.
2. Go back to the ***Activate or Process Configuration Data*** menu shown in Figure 171 on page 176 and use task ***Build IOCP input data set*** to export the I/O configuration from the validated work IODF to an IOCP data set (with PCHIDs still missing or obsolete). The hardware configuration token is passed with the IOCP statements (TOK keyword). This token is used to assure that during the process of assigning PCHID values the contents of the IODF is not changed.

   Download this IOCP data set to the workstation where the CMT is running.
3. Use the CHPID Mapping Tool with the downloaded IOCP data set. For information on how to use the CHPID Mapping Tool, refer to the online help and the related documentation.

   The output of a successful CMT run is again an IOCP data set which contains the original I/O definitions together with inserted and/or updated PCHID values. The original hardware configuration token is still contained in the generated statements.
4. Upload the new IOCP data set to the host and use the HCD primary task ***Migrate configuration data*** to import the PCHIDs from the updated IOCP data set into the validated work IODF. During this task, you select

   migrate option ---> 3. PCHIDs

   from Figure 244 on page 246 in "Migrating input data sets using the HCD dialog" on page 246.

   When importing these statements into the validated work IODF via the migration process for PCHID migration, HCD verifies that the token passed with the IOCP statements match the token stored in the IODF. If this is the case, and if the logical I/O definition described by the imported IOCP statements does not differ from the IODF data, HCD writes the PCHID values into the IODF. If the token does not

[1] When a machine is ordered, the output of the order process is a binary file that represents the physical description of the final machine. One of the components of that file is the type and physical location, including the Physical Channel Identifier (PCHID) value assigned to that location, of all the I/O features in the final machine. This file is called a CFReport.

match, for example, because the IODF has been updated in the meantime, a PCHID migration will not be performed. In this case you must start the process from the beginning.

Note: The IOCP input data set may contain keyword values which exceed the 255 character limitation of the assembler program used by HCD for parsing the IOCP statements. This may be the case for the PARTITION (PART) keywords on the RESOURCE statement and on the CHPID statements for spanned channel paths. The affected I/O configuration statements must be deleted in order to perform a successful PCHID migration. However, note that the High Level Assembler V1.5 removes the 255 character limitation.

5. If a PCHID migration has been successfully done, you can invoke the ***Build Production IODF*** task (again). HCD now builds a production IODF that contains all the data that is required to write the I/O configuration data set (IOCDS) via the IOCP program to the Support Element (SE) of the machine, ready to be used for the next IML.

Note: If for any reasons for an XMP processor you want to define a channel that is not physically installed on the machine yet, you can use the method of over-defining a channel path as described in "Over-defining a CHPID" on page 104. Thus you can avoid to let the CHPID Mapping Tool run into an error, because it cannot find the PCHID.

To support the algorithm of mapping the logical CHPID definitions to physical channels, a CMT user can specify priorities to the control units (CU priorities). It is possible to preserve these values across different invocations of the CMT. For this purpose, the CMT passes the CU priorities as special comments to HCD. HCD takes these comment lines and stores them in the IODF attached to the corresponding processor. When generating an IOCP input file for the CMT, HCD includes these comments into the generated statements. HCD does not make these comments visible in the HCD dialog or in the reports.

Create JES3 initialization stream checker data

Because JES3 does not access the IODF directly, it has to be checked whether JES3 I/O and MVS I/O definitions are the same. It is essential that these definitions are consistent. Each time you run this task, the JES3 initialization stream checker data is stored in a data set, thus allowing JES3 to check the previous mentioned definitions and to detect inconsistencies among them.

You can start the task from a work IODF as well as from a production IODF. However, it is recommended to use a production IODF to ensure that the same information is used for IPL.

1. On the ***Primary Task Selection*** panel, select ***Activate or process configuration data***.
2. On the resulting panel select ***Create JES3 initialization stream data***. HCD displays the Create JES3 INISH Stream Checker Data panel.

```
              Create JES3 INISH Stream Checker Data


Specify or revise the following values.

JES3 initialization stream checker data set name
-------------------------------------------------------

MVS configuration ID . . . . . OPSYS01   +
EDT identifier . . . . . . . . A1  +
```

Figure 184. Create JES3 INISH Stream Checker Data

3. Specify the required values.

   The output data set will automatically be allocated (record length 80, record format fixed block). Depending on whether you specify the data set name as sequential or partitioned, the data set will be either sequential or partitioned. It is recommended to specify a partitioned data set (PDS), because this is required by the JES3 initialization stream checker.

   If the data set already exists, you will be asked to confirm replacing it with the new one.

You can also invoke this task in batch mode. See "Build I/O configuration data" on page 301 for a description of the job control information that you need to specify when you build JES3 initialization stream checker data.

Build I/O configuration data

You can use HCD to create an I/O configuration data set containing either:

- an OS configuration
- a processor configuration
- a switch configuration
- FCP device data.

1. On the ***Primary Task Selection*** panel, select ***Activate or process configuration data***.
2. From the resulting panel select ***Build I/O configuration data***. HCD displays the ***Build I/O Configuration Data*** dialog.

```
Build I/O Configuration Data


Specify or revise the following values.

IODF name  . . . . . : 'DOCU.IODFA0.WORK'

Configuration type . . 2   1.  Processor
                           2.  Operating System
                           3.  Switch
                           4.  FCP Device Data

Configuration ID . . . ________  +
Output data set  . . . ____________________________________________


 F1=Help    F2=Split   F3=Exit    F4=Prompt  F5=Reset   F9=Swap
 F12=Cancel
```

Figure 185. Build I/O Configuration Data

3. Specify one of the available configuration types:
   - ***Options 1 - 3:***

     Specify the identifier of the configuration to be used and a name for an output data set to contain the configuration statements according to the specified configuration type. The data set is automatically allocated (record length 80, record format fixed block).

     Specifying an asterisk (*) in the **Configuration ID** field generates all configurations of the specific type to the output I/O configuration data set.

     If the data set already exists, you will be asked to confirm replacing it with the new one.

     For ***Option 3***, HCD offers an additional feature:

     If you specifying an asterisk (*) in the ***Configuration ID*** field for a switch configuration, and with profile keyword SHOW_CONFIG_ALL set to YES, HCD additionally generates configuration statements for control units and devices without a processor and OS connection.
   - ***Option 4:***

     HCD exports the FCP device configurations for a specific processor from the currently accessed IODF as comma-separated values into a CSV output format which you can use as input to the WWPN Prediction Tool to assign world-wide port names to virtualized FCP ports. This HCD output file is also referred to as *FCP SAN configuration template file*.

     Specify the desired processor ID in the **Configuration ID** field. The data set will be automatically allocated (record length 132, record format fixed block).

     If the data set already exists, you will be asked to confirm replacing it with the new one.

You can also invoke this task in batch mode. See "Build I/O configuration data" on page 301 for a description of the job control information that you need to specify.

Verify an I/O configuration

HCD allows you to check the definitions in your IODF against the actual configuration as sensed from the active system. This can be done using zDAC.

The verify function results in a list of all sensed paths in comparison to the defined paths. Using a filter, this usually extensive list can be reduced to the data of interest. The list can be saved and/or printed. The verification can also be carried out as a batch job resulting in an I/O Path Report (see the example Figure 298 on page 357 in section "Print configuration reports" on page 304).

Verifying a configuration against the local system

1. To verify the I/O configuration of the local system select ***Activate or process configuration data*** from the primary task level. From the resulting panel select ***Activate or verify configuration dynamically.*** The Activate or Verify Configuration panel is displayed.

   Note: For the verify function on the Activate or Verify Configuration panel to be available, the processor configuration from which the active IOCDS was built must match the configuration in the IODF used for IPL (token match).

2. Select the ***Verify active configuration against system*** task to compare the system against the active IODF. Select the ***Verify target configuration against system*** task to compare the system against the accessed IODF. The Identify System I/O Configuration panel is displayed.

```
                Identify System I/O Configuration


 Specify or revise the following values. Press ENTER to
 continue.

 IODF to be used . . . . : IODFST.IODF4F
    Processor ID . . . . . FR38LPAR  +
    Partition name . . . . F38H      +
    OS configuration ID  . B710      +

 I/O Cluster name  . . . . ________  + (only for Build CONFIGxx)
```

   Figure 186. Identify System I/O Configuration

3. Specify the processor ID and OS configuration ID. If the specified processor is in LPAR mode, you must also specify a partition name.

Verifying a configuration against a system in the sysplex

1. Select ***Activate or process configuration data*** from the primary task level. From the resulting panel select ***Activate configuration sysplex-wide.*** The ***Active Sysplex Member List*** is displayed, listing all active systems of the Sysplex as stored in the sysplex couple data set of the system.
2. After selecting the system to be verified a context menu with two verification actions is displayed. Select the ***Verify active configuration against system*** task (action code **k**) to compare the system against the active IODF. Select the ***Verify target configuration against system*** task (action code **l**) to compare the system against the accessed IODF.

   The Identify System I/O Configuration panel is displayed (see Figure 186 on page 193).

3. Specify the processor ID and OS configuration ID. If the specified processor is in LPAR mode, you must also enter a partition name.

The I/O path list

The I/O Path List is the output of the verify function available on the Active Sysplex Member List and the Activate or Verify Configuration Dynamically panel (see “Verifying a configuration against the local system” on page 193“Verifying a configuration against a system in the sysplex” on page 193). The list compares the configuration in the accessed or the active IODF with the actual configuration as sensed from the system.

The report extends over two pages and can be scrolled horizontally.

```
-----------------------------------------------------------------------------
                              I/O Path List       Row 217 of 627 More:
Command ===> ___________________________________________ Scroll ===> CSR

Accessed IODF: SYS4.IODF00
Active IODF  : SYS4.IODF00                              System . : HCD4
Processor . .: M313       Partition : HCD4              OS config: MVSVM

----I/O Path----- ----------Sensed Data--------- ----IODF Data---------- D
CHP CU   DEV      STAT CHT   CUTYPE   DEVTYPE  O CHT CUTYPE   DEVTYPE  S
3C  5900 5900,256      FC_S  2107-981 3390B    Y FC  2107     3390B
3C  5A02 5A00,16       FC_S  2107-981 3390B    Y FC  2107     3390B
3C  5A02 5A10,11  7    FC_S  2107-981 3390B      FC  2107     3390B
3C  5A02 5A1B,195      FC_S  2107-981 3390B    Y FC  2107     3390B
3C  5A02 5ADE,2                                  FC  2107     3390B      *
3C  5A02 5AE0,32                                 FC  2107     3390A    0 *
3C  5B03 5B00,224      FC_S  2107-981 3390B    Y FC  2107     3390B
3C  5B03 5BE0,32                                 FC  2107     3390A    0 *
3C  5C01 5C00,16  7    FC_S  2107-981 3390B      FC  2107     3390B
3C  5C01 5C10,168      FC_S  2107-981 3390B    Y FC  2107     3390B
3C  5C01 5CB8,3   7    FC_S  2107-981 3390B      FC  2107     3390B
3C  5C01 5CBB,13       FC_S  2107-981 3390B    Y FC  2107     3390B
```

Figure 187. I/O Path List

For each channel path sensed and/or defined in the accessed IODF, the list contains a row showing the I/O path and the sensed and defined channel path, control unit, and device information. If a switch is included in the path, the right page shows the corresponding switch information.

Any discrepancies between the defined and the sensed data are indicated in column D on the right. For channel paths for which column D is blank, the defined and sensed data are consistent. The following values may appear:

Symbol
Meaning

*****
Defined and sensed I/O paths differ

C
Defined only to processor but not to OS

O
Defined only to OS but without a path to the processor

@
A combination of * and C

On the display column D is highlighted.

Columns STAT and O indicate the status of the I/O path and the connected device, respectively. An empty field means that the corresponding I/O path or device is online. Offline I/O paths are marked with OFFL and offline devices with Y. If the system is unable to sense the status of an I/O path, it is marked UNKN. If a path is online, HCD checks, whether a single point of failure (SPOF) can be found for this path. If yes, this single point of failure is mapped to the following

- BLANK: Sensed I/O Path is online and no SPOF exists

  If the sensed I/O path is online and a SPOF exists, an up to four digit number is shown with a SPOF indication as follows:

- Position 1 contains blank or SPOF indication 3 (book), 5 (fail-over domain), 6 (fan-out), 7 (domain), 8 (secondary STI/STI).
- Position 2 contains C if the controller interface shares a SPOF.
- Position 3 contains P if the device has only one path online.
- Position 4 contains S if all paths go through the same switch.

Asterisks (`*`) in the CHT (channel type), CUTYPE (control unit type), or DEVTYPE (device type) columns indicate that I/O paths are returned but the values for the corresponding types are blank or invalid.

For certain configurations the I/O path list, although restricted to one processor or partition, can be extensive. Using the `Filter` action you can reduce the list to the entries of interest.

You can save the displayed list by entering SAVE in the command line on the I/O Path List.

Note: The LOCATE command is not available for the I/O path list.

Activate a configuration dynamically

The system programmer (or other authorized persons) can use the option ***Activate or verify configuration dynamically*** or the ACTIVATE operator command to make changes to a running configuration. That is, the possibility is offered to change from a currently active configuration to some other configuration that is to be made active without the need to POR or IPL the system again.

When activating a configuration dynamically, HCD compares the currently active IODF with the IODF that is to be activated and then processes the difference.

For the IODF that is to be activated, HCD uses the production IODF that is currently in use with the dialog. Use the same high-level qualifier for the currently active IODF and the IODF to be activated.

z/OS HCD Planning gives a detailed description of how to dynamically activate a configuration. It describes the prerequisites for a dynamic activation, explains when hardware and software changes or software-only changes are allowed, and describes the actions necessary to change your I/O configuration dynamically. The following sections describe how to use the HCD dialog for this purpose.

Before activating a configuration dynamically, you may want to view information about the IODF that has been used for IPL or the last dynamic activation.

View active configuration

HCD allows you to view the name and status of the IODF that has been used for IPL or for last dynamic activation. The operating system configuration and EDT identifier and, if applicable, the configuration token, which is currently active in the HSA (hardware system area), are shown. Use the ***View active configuration*** function for an overview of the actual status for dynamic activation, indicating whether hardware and software changes are allowed.

1. On the ***Primary Task Selection*** panel, select ***Activate or process configuration data*** and then ***View active configuration***.

   The ***View Active Configuration*** window with sample data is shown:

```
                    View Active Configuration


Currently active IODF . . : SYS1.IODF01
   Creation date  . . . . : 1995-08-18
   Volume serial number . : SYSPAG

Configuration ID  . . . . : MVSVM       MVS Testsystem on VM
EDT ID  . . . . . . . . . : 00

HSA token . . . . . . . . : LMIF9672 96-08-02 13:22:50 SYS1     IODF50

Activation scope:
Hardware changes allowed .: Yes
Software changes allowed .: Yes

ENTER to view details on the activation scope.
```

Figure 188. View Active Configuration

2. Press the Enter key to display detailed information on limitation(s) to the activation scope. A ***Message List*** is displayed containing the messages about the reasons for the restrictions.

How to activate if hardware and software changes are allowed

The following procedure describes how to activate a configuration dynamically if both hardware and software changes are allowed. Refer to *z/OS HCD Planning* on information when both hardware and software configuration changes are allowed and when only software configuration changes are allowed.

1. On the ***Primary Task Selection*** panel, select ***Activate or process configuration data***, and from the resulting panel select ***Activate or verify configuration dynamically***. HCD displays the Activate or Verify Configuration panel.

```
              Activate or Verify Configuration


The currently active IODF matches the hardware I/O
configuration.  Both hardware and software definitions may be
changed. Select one of the following tasks.

__  1.  Activate new hardware and software configuration.
    2.  Activate software configuration only. Validate
        hardware changes. Process changes to Coupling
        Facility elements.
    3.  Activate software configuration only.
    4.  Verify active configuration against system.
    5.  Verify target configuration against system.
    6.  Build CONFIGxx member.

 F1=Help      F2=Split     F3=Exit      F9=Swap     F12=Cancel
```

Figure 189. Activate or Verify Configuration

2. Select what you want to activate. The following figure assumes that you selected task `1. Activate new hardware and software configuration`. The panels when you select the other tasks are similar.

```
          Activate New Hardware and Software Configuration

Specify or revise the values for the IODF activation.

Currently active IODF . : SYS4.IODF10
   Processor ID . . . . : ECL2         ECL2 VMA,C,IRDx,SYSx,COHx,VSE
   Configuration ID . . : MVSVM        MVS Testsystems
   EDT ID . . . . . . . : 00

IODF to be activated  . : SYS4.IODF71
   Processor ID . . . . . ECL2      +
   Configuration ID . . . MVSVM     +
   EDT ID . . . . . . . . 00  +

Test only  . . . . . . . . . . . . . . . . . . . .  Yes  (Yes or No)
Allow hardware deletes (FORCE, FORCE=DEVICE) . . .  No   (Yes or No)
Delete partition access to CHPIDs unconditionally
(FORCE=CANDIDATE)  . . . . . . . . . . . . . . . .  No   (Yes or No)
Write IOCDS  . . . . . . . . . . . . . . . . . . .  No   (Yes or No)
Switch IOCDS for next POR  . . . . . . . . . . . .  No   (Yes or No)
```

Figure 190. Activate New Configuration: Hardware and Software Changes

The panel contains information about the currently active IODF.

3. On the Activate New Hardware and Software Configuration panel you can change the fields that relate to the IODF that is to be activated, and you can specify options as applicable to your requirements. It is recommended that you first specify to test an activation before you dynamically activate a configuration.

   `Allow hardware deletes` option:

   If logical partitions have been defined for the currently active configuration, you can specify whether you want to allow hardware deletes.

   `Yes` means that the hardware deletes become effective for all partitions.

   No (the default) means that, if the changes include requests for deleting hardware, the activation is rejected.

   Note that hardware delete can also be indirectly performed as a result of other changes, for example, a change of a channel path consist of a deletion and an addition of a channel.

   A configuration change is rejected if it includes a hardware delete for an I/O component that is online to the logical partition from which you are making the change, even if you have entered `Yes` in the `Allow hardware deletes` option field. Therefore, you should vary offline any affected I/O component in all logical partitions. For example, when changing a channel path from unshared to shared, you must allow hardware deletes, and you must configure the channel path offline and vary offline the associated I/O devices before you activate the configuration. See *z/OS HCD Planning* for details about preventing disruption when changing the characteristics of I/O components.

   `Delete partition access to CHPIDs unconditionally` option:

   You can also specify how this activation should treat any deletion of a partition from the access or candidate list of a channel path. In the field `Delete partition access to CHPIDs unconditionally` (FORCE=CANDIDATE), enter either `Yes` or `No`. If you specify `Yes`, the access to the channel path will be revoked even if the channel is configured online to the partition; the channel will be configured off-line to the partition, and active I/O operations might be disrupted. If you specify No (the default), the activation will be rejected if it includes a deletion of partition access to a channel path that is configured online to that partition.

   Note: You cannot unconditionally delete the partition that is invoking the activate request from the candidate or access list of a channel path if the channel path is currently configured online.

4. If the dynamic activation completed successfully, HCD displays a message.

Configure channel path online to the partition

When activating a configuration in which a partition is added to the access list of a channel path, you must configure the channel path online to the partition using either the MVS CONFIG command or the processor console CHPID command. PR/SM will configure the channel path to the partition at subsequent activations only after you configure it using the previous commands at least once.

When a particular IOCDS is used in a POR for the first time after it has been written, the definitions in that IOCDS are used to determine the assignment of channel paths to logical partitions according to the channel path access lists that are defined. All previous information about channel configurations associated with this IOCDS is discarded. The exception to this rule is when a newly written IOCDS is first used as part of a dynamic I/O change to the system. For example, the new IOCDS is used as a result of a ***Switch IOCDS for next POR*** or the new IOCDS is the target of the ACTIOCDS= parameter of the MVS ACTIVATE command. When a new IOCDS is used in this manner, the current state of channel configurations is preserved and immediately associated with the newly written IOCDS.

See *z/OS MVS System Commands* for information about the MVS CONFIG command and see the applicable *Processor Resource/Systems Manager Planning Guide* for information about the CHPID command and for a description of automatic configuration of channel paths to partitions.

If dynamic activation fails

If the activation is rejected, HCD displays a panel that lists the messages and reasons for a failure. From the displayed message list, you can request further information. The message list can also be displayed by using the command SHOWMSG ACTIVATE on any panel that has a command line (except on help panels).

In some cases a dynamic activation may fail and HCD recommends recovery. HCD displays a panel where you can specify whether you want to recover:

- If you confirm recovery by specifying Yes, HCD performs *hardware-only changes*.

  You can specify to recover in two ways:

  – To resume activation of the target IODF. That is, HCD tries to continue with the activation.
  – To reset the configuration to the source IODF. That is, HCD activates the configuration that existed before the failure occurred.
- If you do not confirm recovery by specifying No, HCD allows you to continue with *software-only changes*. Hardware changes are activated up to the point where the failure occurred.

Detection of illegal split/merge of LCU

If a request for activating a new configuration causes a logical control unit (LCU) to be split or merged illegally, HCD rejects the request. HCD considers an LCU to be:

- Illegally split if a physical control unit (PCU) is removed from the LCU that has devices remaining connected to it.
- Illegally merged if a physical control unit is added to an LCU that has devices connected to it.

HCD detects every split/merge during activation and informs you by message. The message tells between which PCU and which device the split/merge occurred; it also explains how to correct the condition.

For more information on how to recover after a system failure, refer to *z/OS HCD Planning*.

How to activate if software-only changes are allowed

The following procedure describes how to activate a configuration dynamically if only software changes are allowed. Refer to *z/OS HCD Planning* on information when both hardware and software configuration changes are allowed and when only software configuration changes are allowed.

1. On the ***Primary Task Selection*** panel, select ***Activate or process configuration data***, and from the resulting panel select ***Activate configuration dynamically***. HCD displays the following panel:

```
        Activate Software Configuration Only

Specify or revise the values for IODF activation.


Hardware changes will be validated, and the activation will be rejected
in the case of an error.

Currently active IODF . : SYS4.IODF10
   Processor ID . . . . : ECL2         ECL2 VMA,C,IRDx,SYSx,COHx,VSE
   Configuration ID . . : MVSVM        MVS Testsystems
   EDT ID . . . . . . . : 00

IODF to be activated  . : SYS4.IODF71
   Processor ID . . . . . ECL2      +
   Configuration ID . . . MVSVM     +
   EDT ID . . . . . . . . 00  +

Test only . . . . . . . . Yes    (Yes or No)
```

Figure 191. Activate Software Configuration Only

The panel contains information about the currently active IODF.

2. On the Activate Software Configuration Only panel, you can change the fields that relate to the IODF that is to be activated. It is recommended that you first test an activation before you actually dynamically activate a configuration.
3. If the dynamic activation completed successfully, HCD displays a message.

If dynamic activation fails

If the activation is rejected, HCD displays a panel that lists the message(s) and reasons for a failure. From the displayed message list, you can request further information. The message list can also be displayed by using the command SHOWMSG ACTIVATE on any panel that has a command line (except on help panels).

Activate a configuration sysplex-wide

HCD offers you a single point of control for systems in a sysplex. You can now dynamically activate the hardware and software configuration changes for each system in a sysplex from any other system in the same sysplex. You can:

- Display active sysplex members
- Activate Software Configuration Changes Only
- Activate Software and Hardware Configuration Changes
- Switch IOCDS for the next POR

z/OS HCD PLanning gives a detailed description of how to dynamically activate a configuration. It describes the prerequisites for a dynamic activation, explains when hardware and software changes or software-only changes are allowed, and describes the actions necessary to change your I/O configuration dynamically. The following sections describe how to use the HCD dialog for dynamically activating systems in a sysplex.

Displaying active sysplex members

Before you can make any change to a configuration in a sysplex, you must display the Active Sysplex Member List. From this list you then select different actions.

1. On the ***Primary Task Selection*** panel, select ***Activate or process configuration data***, and from the resulting panel select ***Activate configuration sysplex-wide***. HCD displays the Active Sysplex Member List.

```
  Goto  Query  Help
------------------------------------------------------------------------------
                         Active Sysplex Member List                Row 1 of 3
Command ===> _____________________________________________ Scroll ===> PAGE

Select one or more systems, then press Enter. To refresh the Activate/Verify
Status, press Enter without selections made.

IODF to be activated: SYS4.IODF71
Active sysplex  . . : IRD4PLEX

  System   Processor Partition Active          Config.  EDT Act./Verify
/ Name     ID        Name      IODF            ID       ID  Status
_ IRD4     ECL2      IRD4      SYS4.IODF10     MVSVM    00
_ IRD5     ECL2      IRD5      SYS4.IODF10     MVSVM    00
_ IRD6     R35       IRD6      SYS4.IODF10     MVSVM    00
****************************** Bottom of data ******************************
```

Figure 192. Activate Sysplex Member List

You can see the system names, and the processor IDs and partition names associated with the system names. You can also see the IODF to be activated, the name of the sysplex, the active IODFs, the configuration IDs and EDT IDs used for IPL, and the Activate status, which is empty initially.

HCD requests the information from the sysplex couple data set and the HSA of every CPC and displays it in a formatted list.

Refreshing the Active Sysplex Member List: The Active Sysplex Member List will be refreshed whenever you press the Enter key. If a system joins the sysplex, it will be added to the list in alphabetical order. If a system leaves the sysplex, it will be deleted from the list.

Empty Processor ID: The entry in the Processor ID column is empty when the operating system runs as a VM guest.

This does not mean that you cannot initiate an activation request for that system. It means that you have to specify the correct processor ID later on by yourself, as required.

2. Select a system name and specify ***View the configuration status*** from the context menu (or select action code **v**) to see the following information:
   - information about the currently active hardware configuration token stored in the HSA
   - information about the free space in the HSA.

Activate software configuration changes only

The following procedure describes how to change the software configuration for one or more systems in a sysplex.

1. Select one or more systems from the Active Sysplex Member List (see Figure 192 on page 200) and the ***Activate software configuration only*** action from the context menu (or action code **o**). The ***Activate Software Configuration Only*** dialog is displayed.

```
           Activate Software Configuration Only
                                                                Row 1 of 3

 Specify or revise the values for activation, then press Enter.

 IODF to be activated: SYS4.IODF71

 System   Processor Partition Config.  EDT  Valid. Test  Active
 Name     ID +      Name      ID +     ID + HW Ch. Only  IODF
 IRD4     ECL2      IRD4      MVSVM    00   Yes    Yes   SYS4.IODF10
 IRD5     ECL2      IRD5      MVSVM    00   Yes    Yes   SYS4.IODF10
 IRD6     R35       IRD6      MVSVM    00   Yes    Yes   SYS4.IODF10
 **************************** Bottom of data ****************************
```

Figure 193. Activate Software Configuration Only

All systems you have selected are shown together with the associated processor IDs.

Empty Processor ID: If the *Processor ID* field is empty, prompt for the processor IDs and select the actual one.

Empty Configuration or EDT ID: If the *Config. ID* and the *EDT ID* fields are empty, it is an indication that the ID of the currently active configuration is not defined in the IODF to be activated. Prompt for the new ID. Updating the *processor ID*, the *Config. ID* or the *EDT ID* fields might be required if your IODF to be activated contains IDs different from those displayed as default IDs.

2. On the Activate Software Configuration Only panel, update the fields of one or more systems. It is recommended that you first test an activation before you actually dynamically activate a configuration.
3. If the hardware token matches, the ***Valid. HW Ch.*** option is set to 'Yes'. It is recommended to validate hardware changes when performing a software change. This is required when the configuration change contains coupling facility control units or devices.
4. After pressing the Enter key, the Active Sysplex Member List is displayed again, but now the Active Status column shows the status *In progress*. If you refresh the list occasionally, you can see that one system after the other completes the activation request. This is indicated by the status *Messages*.
5. Select a system and the ***View messages*** action from the context menu (or action code **m**). The messages returned from that system as the result of the activation request are displayed.

```
                        Message List
  Save  Query  Help
------------------------------------------------------------------------
                                                                Row 1 of 4

Select one or more messages, then press Enter. To refresh the list, press
ENTER without selections made. To reply to a WTOR message, use the REPLY
command.

System name: SC52

/ Message Text
_  IOS500I ACTIVATE RESULTS 084
#  ACTIVATE COMPLETED SUCCESSFULLY
#  NOTE = 0100,SOFTWARE-ONLY CHANGE
#   COMPID=SC1C3
***************************** Bottom of data ******************************
```

Figure 194. Message panel

6. If you do not need the messages any longer, you can delete them by using the option ***Delete messages*** (or action code **d**).

If dynamic activation fails

If the activation is rejected, HCD displays a panel that lists the messages and reasons for a failure.

To get more information you also use the ***View configuration status*** option (or action code **v**). This option provides you the same information as when entering the command D IOS,CONFIG(ALL) at the system console.

```
Message List
   Save  Query  Help
 ---------------------------------------------------------------------------
                                                                  Row 1 of 12

 View configuration status of selected systems.

 Message Text
  IOS506I 06.49.55 I/O CONFIG DATA 378
  ACTIVE IODF DATA SET = SYS6.IODF29
  CONFIGURATION ID = L06RMVS1       EDT ID = 01
  TOKEN:  PROCESSOR DATE     TIME     DESCRIPTION
   SOURCE: P101     95-05-09 15:34:56 SYS6     IODF29
           48 PHYSICAL CONTROL UNITS
          547 SUBCHANNELS FOR SHARED CHANNEL PATHS
          548 SUBCHANNELS FOR UNSHARED CHANNEL PATHS
           23 LOGICAL CONTROL UNITS FOR SHARED CHANNEL PATHS
           23 LOGICAL CONTROL UNITS FOR UNSHARED CHANNEL
           PATHS
```

Figure 195. View Configuration Status

HCD offers you two possibilities after an activation failed:

- Select ***Resume activation of target configuration*** (or action code **t**) to force the activation of the system.
- Select ***Reset source configuration*** (or action code **r**) to reset the original configuration.

Activate software and hardware configuration changes

The following procedure describes how to change the software and hardware configuration for one or more systems in a sysplex.

1. Select one or more systems from the Active Sysplex Member List and the ***Activate software and hardware configuration*** action from the context menu (or action code **a**). The Activate Hardware and Software Configuration panel is displayed.

```
           Activate Hardware and Software Configuration
                                                  Row 1 of 2 More:       >

  Specify or revise the values for activation, then press Enter.

  IODF to be activated: SYS4.IODF71

  System   Processor Partition Config.  EDT  -FORCE Option- Switch  Test
  Name     ID +      Name      ID +     ID + DEVICE CANDID. IOCDS + Only
  IRD4     ECL2      IRD4      MVSVM    00   No     No      __      Yes
  IRD6     R35       IRD6      MVSVM    00   No     No      __      Yes
  ***************************** Bottom of data ******************************
```

Figure 196. Activate Hardware and Software Configuration

The systems you have selected are shown together with the associated processor IDs.

Empty Processor ID:

If the `Processor ID` field is empty, prompt for the processor IDs and select the actual one.

Empty Configuration or EDT ID:

If the `Config. ID` and the `EDT ID` fields are empty, it is an indication that the ID of the currently active configuration is not defined in the IODF to be activated. Prompt for the new ID. Updating the `Processor ID`, the `Config. ID` or the `EDT ID` fields might be required if your IODF to be activated contains IDs different from those displayed as default IDs.

Switch IOCDS:

In the `Switch IOCDS` column, you can define the IOCDS name used for the next POR.

Note: If you prompt for IOCDS, you might see outdated IOCDS update dates, if it was not possible with the last write IOCDS action to update the IOCDS records in the IODF. To ensure update of the IOCDS dates, use option 2.2 (write IOCDS) for the processor in focus.

2. On the Activate Hardware and Software Configuration panel, update the fields of one or more systems. It is recommended that you first test an activation before you dynamically activate a configuration.

   If you plan to delete a device for a specific system, specify *Yes* in the *FORCE DEVICE* field of that system. If you plan to remove a partition from the access or candidate list of a channel path belonging to a specific system, specify *Yes* in the *FORCE CANDID.* field of that system.

3. After updating the panel, press the Enter key. The Active Sysplex Member list will be displayed again, but now the *Active IODF* fields have changed for the affected systems and now contain the name of the IODF to be activated. If you have defined different processor IDs, configuration IDs or EDT IDs, and you have activated their configurations, these fields also have been changed.
4. Select a system and the ***View messages*** action from the context menu (or action code m). The messages returned from that system as the result of the activation request are displayed.
5. If you do not need the messages any longer, you can delete them by using the option ***Delete messages*** (or action code d).

If Dynamic Activation Fails

Refer to "If dynamic activation fails" on page 201 for information on how to proceed, if your activation has been rejected.

Switch IOCDS for the next POR

In addition to dynamically activating a sysplex, you can also specify the IOCDSs to be used for the next POR from the Active Sysplex Member List.

Refer to "Switch IOCDS for systems in a sysplex" on page 215 for a description of how to switch the IOCDS for the next POR.

Activate a configuration HMC-wide

HCD provides a function to manage dynamic I/O changes from a single point of control (managing system) for all systems running on CPCs that are controlled by the same hardware management console (HMC). The function includes the following features:

- listing all partitions on the HMC-controlled CPCs with their status (deactivated, activated, IPLed), and partition dependent information
- distributing a production IODF to selected target systems
- remotely performing dynamic hardware or software changes, or both, on selected target systems and showing the resulting messages
- operating selected target systems for the activation remotely and showing the resulting messages

To work with HMC-wide activate functions, start from the ***Processor Cluster List*** (Figure 178 on page 182), where you can select action ***Work with CPC images*** (action code v) to obtain the ***CPC Image List*** (see Figure 197 on page 205).

The ***CPC Image List*** displays information about the selected CPC. This includes the processor ID, SNA address, and the HSA token.

Partitions that are deactivated or not IPLed, or that do not run any z/OS (MVS) or z/VM (VM) system are shown as disabled (with a #sign in the action column) and no action is possible for such a partition.

Also all LPARs without an entry in the connection table which are not reachable indirectly via a reachable sysplex are listed but marked as disabled (#) in the action column.

The ***CPC Image List*** displays all partitions defined on the selected CPC with their operation status, connection status, and activation status:

- partition name
- partition ID (LPID from the support element)
- operation status of the partition:

  0001
  The partition is operational and a system is IPLed.

  0002
  The partition is activated but no system is IPLed.

  0008
  The partition is deactivated.

  0010
  There are exceptions.

  Any other value indicates a special condition for the partition that you can check at the Support Element (SE) of the selected CPC or the HMC.
- The connection status (column ***Co ST***) for z/OS and z/VM systems running in the image, indicating whether this system is reachable or not. This information depends on the content of your connection table.

  BLANK
  Indicates that no entry for the system exists in the connection table and therfore, a connection between HCD of the local system to the displayed system does not exist.

  Y
  Indicates that a connection between HCD of the local system to the displayed system exists because of an entry in the connection table.

  S
  Indicates that a connection between HCD of the local system to the displayed system exists because they are either identical or in the same sysplex, or another member of the sysplex has a direct connection via an entry in the connection table.

  N
  Indicates that a connection between the local HCD and the displayed system failed in spite of an entrx in the connection table.
- The activation status of the image contains information about its activation capabilities and currently active configurations.

  `Activation HW`
  Indicates whether a Hardware Activate is possible: Y or not: N, or whether it is unknown: ?.

  `Activation SW`
  Indicates whether a Software Activate is possible (Y or N). If the software is not managed by HCD, a switch of the IODF is possible: S.

  `Activation Status`
  Indicates the status of an activate request for connected z/OS and z/VM systems (for example, *Activating* or *In Progress*). It indicates also whether hardware or software changes or both are possible.

```
  Goto  Query  Help
------------------------------------------------------------------------------
                                CPC Image List       Row 1 of 60 More:       >
Command ===> ___________________________________________________ Scroll ===> PAGE

Select one or more systems of the CPC, then press Enter. To refresh the
Activate/Verify Status, press Enter without selections made.

Processor ID : R35            SNA Address  : IBM390PS.R35
HSA Token  . : R35      12-02-06 09:26:03 SYS4     IODF71

  -- Partition --- Co Sysplex   ------- System -------  ----- Activation -----
/ Name     ID Stat St Name      Name     Type   Level   HW SW Status
 _ DWB1     2A 0001    DWB1PLEX  DWB1     MVS    1.12
 _ DWB2     3A 0001    DWB1PLEX  DWB2     MVS    1.12
 _ IRD6     1B 0001 Y  IRD4PLEX  IRD6     MVS    2.1     Y  Y
 _ R35LP29  1E 0001    R35SSI    BOER3529 VM     6.2
 _ R35LP43  2D 0001    R35SSI    BOER3543 VM     6.2
 _ TRX1     2C 0001 S  TRX1PLEX  TRX1     MVS    2.1     Y  Y
 _ TRX2     3C 0001 Y  TRX1PLEX  TRX2     MVS    1.13    Y  Y
 # IRD7     0C 0002
 # IRD8     1C 0002 N
 # R35LP10  0A 0001                       LINUX  3.0.13

  F1=Help        F2=Split       F3=Exit        F7=Backward    F8=Forward    F9=Swap
 F10=Actions    F12=Cancel     F13=Instruct   F14=SortName   F15=SortStat  F16=SortSplx
 F22=Command
```

Figure 197. CPC Image List

Scrolling to the right displays further activation status information as shown in Figure 198 on page 205:

- active IODF
- active OS configuration ID in column ***Conf ID*** (available for z/OS systems; available for z/VM systems only if z/VM manages the software configuration via HCD)
- active EDT ID (only available for z/OS systems)

```
  Goto  Query  Help
------------------------------------------------------------------------------
                                CPC Image List       Row 1 of 60 More: <
Command ===> ___________________________________________________ Scroll ===> PAGE

Select one or more systems of the CPC, then press Enter. To refresh the
Activate/Verify Status, press Enter without selections made.

Processor ID : R35            SNA Address  : IBM390PS.R35
HSA Token  . : R35      12-02-06 09:26:03 SYS4     IODF71

  Partition  Active             Conf      EDT
/ Name       IODF               ID        ID
_ DWB1
_ DWB2
_ IRD6       SYS4.IODF10        MVSVM     00
_ R35LP29
_ R35LP43
_ TRX1       SYS1.IODF01        MVSVM     00
_ TRX2       SYS1.IODF01        MVSVM     00
# IRD7
# IRD8
# R35LP10

  F1=Help        F2=Split       F3=Exit        F7=Backward    F8=Forward    F9=Swap
 F10=Actions    F12=Cancel     F13=Instruct   F14=SortName   F15=SortStat  F16=SortSplx
 F22=Command
```

Figure 198. CPC Image List scrolled to the right

Use PF keys to sort the list by the following columns:

F14
sort by ***Partition Name***

F15
sort by ***Partition Stat (operational status)***

F16
sort by ***Sysplex Name***

From the ***CPC Image List*** you can launch dynamic hardware and software configuration changes on any reachable system (in any sysplex) on any CPC that is configured in the same Hardware Management Console (HMC). All available actions are introduced in "Available configuration activation actions" on page 206.

Press the Enter key without further selection to refresh the display of the activation status, for example, when there is an activation in progress.

The save list function is available for the ***CPC Image List***.

Note: If you stopped and restarted an HCD dispatcher on a connected system, while you have opened a ***CPC Image List*** connected to the CPC where this system is running, you must reconnect this CPC before performing any new action on the ***CPC Image List*** containing the concerned system. Otherwise you may get message CBDA605I, saying that HCD remote processing failed.

Available configuration activation actions

The following configuration actions are available from the ***CPC Image List***:

- ***Activate software configuration only*** (action code o). This action is available if column ***Activation SW*** shows Y or S.
- ***Activate software and hardware configuration*** (action code a). This action is available if column ***Activation HW*** shows Y.
- ***Resume activation of target configuration*** (action code t). This action is needed if a previous hardware activation failed and the target system requires recovery. Column ***Activation HW*** must show Y.
- ***Reset source configuration*** (action code r). This action is needed if a previous hardware activation failed and the source system requires recovery. Column ***Activation HW*** must show Y.
- ***Transmit IODF*** (action code x). The Export IODF dialog is invoked. This action is available for a selectable image.
- ***Process system commands*** at the target system and show the result of the command execution on the managing system (action code c).

The actions ***Resume activation of target configuration*** and ***Reset source configuration*** use the same dialogs, interaction and processing as the corresponding actions available from the ***Active Sysplex Member List*** as described in "Activate a configuration sysplex-wide" on page 199.

Action ***Transmit IODF*** allows sending an IODF to a target system. This task does not require that a connection exists between the local HCD client (managing system) and the HCD of the target system.

For details about the remaining actions, see the following information units:

- "How HCD processes Activate actions" on page 206
- "How HCD processes system commands" on page 207

How HCD processes Activate actions

With action codes o (for ***Activate software configuration only***) and a (for ***Activate software and hardware configuration***), you can send the corresponding activation requests to the selected remote target systems. The invoked dialog and the processing is the same as with actions available from the ***Active Sysplex Member List*** as described in "Activate a configuration sysplex-wide" on page 199. However, the request is sent to the selected target system and the messages are returned from that systemm to the managing system.

When performing an Activate action on a remote system, HCD checks whether the currently accessed target IODF is already available at the remote system. HCD looks for a matching IODF name with a

high-level qualifier that corresponds to the high-level qualifier (HLQ) of the active IODF on the remote system. If there exists one, HCD checks whether the IODF token of that IODF and the IODF token of the target IODF match. If they do match, the new target IODF can be accessed by the remote system and the remote Activate request can be sent. For example, if the target IODF on the managing system is `J0E.IODFA1` with an IODF token of `token777`, and the HLQ of the currently active IODF on the managed system is SYS4, then HCD looks for IODF `SYS4.IODFA1`. If this IODF is found, and has the IODF token `token777`, this existing IODF is used for the remote activate request.

If the target IODF can not be accessed from the remote system due to failing conditions, the target production IODF is transferred to the remote system cataloged there with an HLQ that corresponds the HLQ of the active IODF on the target system and on the same volume as the active IODF resides on. Before a production IODF on the remote system is replaced, you must confirm the deletion of the old IODF version. Data sets that are associated with the production IODF, like activity log, change log or HCM MCF data set are not sent.

If the target system is an MVS system, the remote system processes the Activate request in the same way as a sysplex-wide activate action that is issued on the target system. This means, an ACTIVATE system command is built and routed to the corresponding system in the sysplex. Activate processing is done asynchronously. On the ***CPC Image List*** on the local (managing) system, the field ***Activation Status*** is changed to `Activating`. You can refresh the status by pressing Enter without selecting any partition. If activate processing has not yet completed, the ***Activation Status*** field shows `In progress`. If the activate processing has completed on the remote system, this field switches to `Messages` to indicate that the resulting messages have been received from the remote system.

If the target system is a VM system, the remote system will process the Activate request synchronously. The local system waits until activate processing has been completed on the remote system. The ***Activation Status*** field shows `Activating`. Press Enter to switch the activation status to `Messages` immediately.

Now you can view the resulting messages by selecting action ***View messages*** (action code **m**). These messages indicate how the the activation request has processed on the remote system(s).

HCD allows you to enter activate requests to multiple partitions at a time. The requests for systems of the same sysplex are performed as a single remote activate request.

How HCD processes system commands

Applying action code **c** on a selected system in the ***CPC Image List*** invokes the ***Process System Command*** dialog. Here you can enter a system command that you want to be processed on the target system or on all systems belonging to the same sysplex. The sample dialog in Figure 199 on page 207 shows the entered system command `d ios,config`.

The entered command must either be an MVS system command, if the target system is of type MVS, or a CP command, if the target system is of type VM. For target VM systems, command routing to other systems in the sysplex is not supported. However, HCD does not perform any verification or validation on the command syntax, but sends the entered string to the target system(s) to be executed there.

```
                            Process System Command


 Specify a system command. It will be executed on the selected target
 system. Press ENTER to continue.

 System . . : TRX1
 Sysplex  . : TRX1PLEX

 Command  . . d ios,config_____________________________________________

 Do you want the specified command being
 executed on all systems in the sysplex ?   1   1.  Yes
                                                2.  No
```

Figure 199. Process System Command

When you press Enter, HCD redisplays the ***CPC Image List*** where column ***Activation Status*** now shows `Executing` for all systems where the command is processed. When you press Enter again, the ***Activation Status*** changes to `Messages`.

Now select action ***View messages*** (action code **m**) to display the message(s) resulting from the system command as it had processed on the remote system. An example of a returned message list for the d `ios,config` command is shown in Figure 200 on page 208.

```
                                Message List
  Save  Query  Help
-------------------------------------------------------------------------
                                                                Row 1 of 8
Command ===> ___________________________________________ Scroll ===> PAGE

Select one or more messages, then press Enter. To refresh the list, press
ENTER without selections made. To reply to a WTOR message, use the REPLY
command.

System name: TRX1

/ Message Text
_  IOS506I 17.59.32 I/O CONFIG DATA 776
#  ACTIVE IODF DATA SET = SYS1.IODF01
#  CONFIGURATION ID = MVSVM          EDT ID = 00
#  TOKEN:  PROCESSOR DATE     TIME     DESCRIPTION
#   SOURCE: R35      11-12-13 09:42:28 SYS4     IODF71
#  ACTIVE CSS:  2    SUBCHANNEL SETS CONFIGURED: 0, 1, 2
#  CHANNEL MEASUREMENT BLOCK FACILITY IS ACTIVE
#  LOCAL SYSTEM NAME (LSYSTEM): R35
****************************** Bottom of data ******************************
```

Figure 200. Process System Command - returned messages

Establishing connectivity to remote systems

To establish connectivity to remote systems, you must provide connection data in a connection table. The data set containing the connection table is defined to HCD via the profile option CONNECTION_TABLE as described in “HMC-wide activation” on page 25. Specify the following information in the connection table:

- Processor SNA address with network name and CPC name as defined for the corresponding processors in the IODF and as known in the HMC/SE.
- Partition (image) name as specified in the IODF and configured in the SE.
- IP address or host symbolic destination name for the TCP/IP target system where the HCD dispatcher program is running.
- IP port ID which is used by the HCD dispatcher program at the remote site.
- User ID for the remote system.
- Optional: Password for user ID on the remote system. If you do not provide a password, HCD uses a PassTicket for verifying the authorization for the user ID on the remote system. In this case, you must provide the corresponding RACF definitions (see “How to set up PassTickets for working with CPC images on z/OS” on page 324 and “How to set up PassTickets for working with CPC images on z/VM” on page 325).

Specifiy the values in a single line separated by commas. You can insert comment lines using an * in column 1.

Example:

```
********************************** Top of Data ****
* NETWORK NAME    IMAGE    IP ADDR  PORT  USERID   PASSWORD
*---------------- -------- -------- ----- -------- --------
IBM390PS,R35     ,TRX2    ,BOETRX2 ,51107,USERID10,PASSWRD1
IBM390PS,R35     ,TRX1    ,BOETRX1 ,51107,USERID10,PASSWRD1
IBM390PS,DAN2    ,SYSB    ,BOESYSB ,51107,USERID10,PASSWRD1
*BM390PS,DAN2    ,SYSA    ,BOESYSA ,51107,USERID20,PASSWRD2
```

```
IBM390PS,POL1    ,HCDVM   ,BOEHCDVM,51107,USERID20,PASSWRD2
******************************** Bottom of Data **
```

To be able to perform actions on a remote z/OS system (type MVS), a connection must exist to at least one system of the sysplex where the remote system is part of. For a remote z/VM system (type VM), a connection must exist to that system. On the remote systems, the HCD dispatcher program for remote API calls must be running and listening to the specified ports.

HCD tries to establish an initial connection for all specified target systems in the connection table when the first ***CPC Image List*** is invoked. If a connection can be established and the remote HCD program is running, the connection status shows a Y. If the initial connection failed, the connection status shows N.

Note: The ***CPC Image List*** is not refreshed as long as the underlying ***Processor Cluster List*** is open. To refresh, leave the ***Processor Cluster List*** and reopen the the ***CPC Image List***.

Connections to z/OS or z/VM systems that are not supported (z/OS before V1.10 or z/VM before V5.4) are rejected with an error message.

The connection table data set may be sequential or a member of a partitioned data set. Record format of the data set must be F or FB with a logical record size of at least 80 characters. If no connection table is specified, the ***CPC Image List*** is displayed, but no actions are available for the listed images (with the # sign in the action column).

Prerequisites for working with CPC images

- HCD uses BCPii (Base Control Program internal interface) to query the image (partition) attributes from the Support Element (SE) of the selected CPC. In order to get the partition attributes, the following requirements must be met:
  - The BCPii address space (HWIBCPII) is active and ready to handle BCPii requests.
  - The local and remote support elements (SEs) are enabled for BCPii communication (cross-partition authority must be enabled for each CPC that is queried).
  - The BCPii community name must be defined on the SE for the local and each remote CPC that is queried.
  - The managing user ID must get the authorization to perform the BCPii calls for the target CPCs / images.
- The target systems must have a TCP/IP connection to the managing system. For more information, refer to Appendix E, “Establishing the host communication,” on page 417.
- The user must provide a connection table for the target systems which contains the TCP/IP login data.
- There must be a user ID on each target system that has the authorization to perform dynamic activations and corresponding system commands and that has access to the active production IODF.
- An HCD dispatcher must run on each of the target systems that allows directing incoming remote HCD requests to the local HCD versions.
- The required security setup for using this function is described in “Defining RACF profiles” on page 321 and “Access to HWI.* profiles” on page 324.

Activate a configuration on systems not running HCD

HCD can activate hardware changes dynamically on all processors that are running HCD. However, there are processors that are not running any operating system that runs HCD. Currently, HCD can **ONLY** target a “Hardware Change Only” to a processor that is a stand-alone coupling facility (SACF) processor. The activation of “Hardware Changes Only” enables HCD running on z/OS to communicate with these processors via "Control Code" to manage the dynamic I/O changes on the processor.

To use the dynamic capability on the remote processors, a power-on reset (POR) with an IOCDS containing a MCS partition is necessary. The MCS partition is called MCS_1 and needs to be defined as firmware partition (also known as Licensed Machine Code - LMC partition) with partition ID B in the

highest channel subsystem. This hidden partition contains a service responsible for dynamic activation of hardware changes.

For a 3906, for example, the process to allow dynamic changes requires following pre-requisite steps:

- Define configuration for the processor containing the MCS_1 partition, see “Working with partitions” on page 87. This configuration then needs to be written to an IOCDS on the remote processor.
- Perform a power-on reset (POR) of the remote processor with this IOCDS.
- Provide the necessary authorization on your z/OS system that you use to initiation the hardware only activation, see “Prerequisites” on page 212.

Now this system is ready for dynamic activation of I/O configuration changes.

To perform the hardware only dynamic activate go to the 'Processor Cluster List' (option 2.11) on which the following 3 actions are provided:

- Activate hardware changes only (action code 'a').
- View current active Configuration (action code 'c').
- Download active configuration (action code 'd').

Activate hardware changes only (action code 'a')

HCD reads the activation status of the selected CPC.

If this status can be retrieved and is OK then the ***Activate New Hardware Configuration*** panel is shown on which parameters for the activation can be specified.

If the activation status can be retrieved but the system is in recovery state the ***Recover Hardware Only Activation*** panel is shown. See “Recovery” on page 211 for more information.

```
                 Activate New Hardware Configuration
CBDPDY50

Specify or revise the values for IODF activation.

Source IODF . . . . . . : SYS4.IODFAA
Processor ID  . . . . . : BOESCLY

Target IODF . . . . . . : SYS4.IODF00
Processor ID  . . . . . . ECL2      +

Test only  . . . . . . . . . . . . . . . . . . . . . . . Yes  (Yes or No)
Allow hardware deletes (FORCE, FORCE=DEVICE) . . . . No   (Yes or No)
Delete partition access to CHPIDs unconditionally
(FORCE=CANDIDATE)  . . . . . . . . . . . . . . . . . . No   (Yes or No)

 F1=Help     F2=Split    F3=Exit     F4=Prompt   F5=Reset    F9=Swap
```

Figure 201. Activate New Hardware Configuration

When the currently active I/O configuration is available on the remote system, the Source IODF field displays the name of the IODF used to activate the configuration.

Otherwise, the I/O configuration must be sent from the local system, and the Source IODF field is editable and promptable. It defaults to the name of the currently active IODF on the remote system. If this IODF is not available on your system, you can provide the name of the IODF containing the same I/O configuration. HCD verifies that the IODF exists and contains the required I/O configuration.

The target “Processor ID” is promptable with all processor configurations in the selected target IODF that allow hardware only activates.

Once you confirmed the activation parameters by pressing enter, the dynamic activation for the remote processor is initiated by HCD. HCD issues an information message on the panel that the operation is in process. When ready, the result messages are displayed in the same way as for other activation tasks. See “Activate software configuration changes only” on page 200.

Note: It is important to keep (save) the IODF to be able to do further dynamic I/O changes on the selected target processor.

Recovery

In case that the current active configuration can be retrieved from the remote processor but If the last dynamic activation was interrupted and the processor requires recovering the configuration, the **Recover hardware only activation panel** is displayed. It shows the available configuration information from before the activation information about the source and target parameters of the failed dynamic activation. The panel allows you to specify the recovery direction and - if needed - the Source IODF and Target IODF containing the required configuration.

```
                Recover hardware only activation
CBDPDY51

Recovery is required.

Source IODF . . . . . . : SYS3.IODFAA
Source processor  . . . : S313

Target IODF . . . . . . :  SYS3.IODF00
Target processor  . . . :  S313

Recovery action . . . . . CONTINUE  +



 F1=Help     F2=Split    F3=Exit     F4=Prompt   F5=Reset    F9=Swap
F12=Cancel
```

Figure 202. Recover hardware only activation

For both, the currently active IODF (Source IODF) as well as the IODF to be activated (Target IODF) the IODF name is displayed and can be changed if the IODF are not available on your system with these names.

HCD verifies that the IODFs exist and contain the required configuration.

The recovery action is promptable and defaults to “Continue” .

When selecting recovery action *“Continue”*, a forward recovery is initiated. During forward recovery HCD tries to continue from where the activation was interrupted to get to the target configuration.

When selecting recovery action *“Reset”*, a backward recovery is initiated. During backward recovery HCD tries to rollback all changes already done from where the activation was interrupted to get to the source configuration.

View current active configuration (action code 'c')

HCD shows information of the actual active configuration for the selected processor.

```
                View Active Configuration
CBDPDY60

Source IODF . . . . . . : HCI.IODFAA
Processor ID  . . . . . : BOESCLY

HSA token . . . . . . . : BOESCLY  17-03-14 03:14:15 HCI      IODFAA

Recovery required . . . : No
Target IODF . . . . . . :
Processor ID  . . . . . :

 F1=Help     F2=Split    F3=Exit     F9=Swap    F12=Cancel
```

Figure 203. View Active Configuration

HCD allows to view the name and status of the IODF that has been used for the POR or for the last dynamic activation. The configuration token, which is currently active in the HSA (hardware system area) is shown as well as the information whether recovery is required.

If recovery is required, also the name of the target IODF and the target processor configuration ID in process when the activation failed, are shown.

Download active configuration (action code 'd')

The data of the currently active configuration on the remote processor is transferred to an IODF on z/OS, if available. You can use this function if requested by IBM service in case of problems during dynamic activation.

```
             Download Active Configuration


 Selected SNA address  . : IBM390PS.ECL2
 Source IODF . . . . . . : ORG.IODFAA

 Specify the following value.

 Target IODF name  . . . . ____________________________________________  +


  F1=Help     F2=Split    F3=Exit     F4=Prompt   F5=Reset    F9=Swap
 F12=Cancel
```

Figure 204. Retrieve active IODF

The panel shows the SNA address of the selected processor and the name of the active IODF on that processor. In the target IODF name field you can enter the name of the target IODF for the configuration. You can choose either an existing IODF or a new one. If you select an existing one, it's content will be overridden.

Be aware that the active configuration is not always available at the remote processor.

Prerequisites

The HW only activation is protected by SAF profiles. You can either use a specific profile for each processor, or use more generic profiles as it fits for your organization. A specific processor will be protected by a profile CBD.CPC.ACTIVATE.*netid*.*NAU* in the FACILITY class. In the profile name netid.NAU refers to the SNA address of the processor as defined at the SE.

Build a CONFIGxx member

After dynamic changes have been made to a system it is recommended to update the corresponding CONFIGxx member to reflect these changes. HCD provides a function to build a CONFIGxx member containing the CHP, DEVICE, and SWITCH statements of the local system or of the selected system in a sysplex.

A CONFIGxx member can be built by:

- Selecting the ***Build CONFIGxx member*** action from the Activate or Verify Configuration panel (for the local system)
- Selecting the ***Build CONFIGxx member*** action from the Active Sysplex Member panel (for a system in a sysplex)
- Using a batch utility (see "Build I/O configuration data" on page 301 for details)

After selecting ***Build CONFIGxx member***, the Identify System I/O Configuration panel is displayed (see Figure 186 on page 193). After selecting a system, and an I/O cluster name for managed channel paths, the Restrict Ports Eligible for Dynamic CHPID Management panel is displayed if the configuration contains managed channel paths for the selected I/O cluster. This panel shows all control units known by the

selected system and manageable by DCM and their switch ports set to eligible for DCM (indicated by a 'Y'). You can specify ports as ineligible for DCM by overtyping 'Y' with 'N'.

```
     Restrict Ports Eligible for Dynamic CHPID Management
                                                              Row 1 of 39
Command ===> ___________________________________________ Scroll ===> CSR

Type 'N' to restrict ports related to managed CHPIDs from being used by
dynamic CHPID management.

Processor ID: FR38LPAR  Partition: F38H      OS Configuration ID: B710
I/O Cluster name: UTCPLX38

         ---------- Last digit of port address --------
SW.Port  0  1  2  3  4  5  6  7  8  9  A  B  C  D  E  F
65.4     _  _  N  _  _  _  _  _  _  _  _  _  _  _  _  _
65.B     _  _  _  _  _  _  Y  _  _  _  _  _  Y  Y  Y  _
66.4     _  _  Y  _  _  _  _  _  _  _  _  _  _  _  _  _
66.B     _  _  _  _  _  _  Y  _  _  _  _  _  Y  Y  Y  _
67.A     _  _  Y  _  _  _  _  _  _  _  _  _  _  _  _  _
67.B     _  _  _  _  _  _  Y  _  _  _  _  _  Y  Y  Y  _
68.A     _  _  Y  _  _  _  _  _  _  _  _  _  _  _  _  _
68.B     _  _  _  _  _  _  Y  _  _  _  _  _  Y  Y  Y  _
6D.C     _  _  _  Y  _  _  _  _  _  _  _  _  _  _  _  _
6D.D     _  _  _  Y  _  _  _  _  _  _  _  _  _  _  _  _
6E.C     _  _  _  Y  _  _  _  _  _  _  _  _  _  _  _  _
```

Figure 205. Restrict Ports Eligible for Dynamic CHPID Management

The Build CONFIGxx Member panel is then displayed.

```
                         Build CONFIGxx Member


Specify or revise the values for the CONFIGxx member. Press ENTER to
continue.

Partitioned data set name . 'SYS1.PARMLIB'
Suffix of CONFIGxx member . __

Volume serial number  . . . ______  + (if data set not cataloged)
 F1=Help     F2=Split    F3=Exit     F4=Prompt   F5=Reset    F9=Swap
 F12=Cancel
```

Figure 206. Build CONFIGxx Member

The initial value for the partitioned data set name is 'SYS1.PARMLIB'.

If the specified CONFIGxx member already exists, the Confirm Update CONFIGxx Member panel is displayed.

```
                Confirm Update CONFIGxx Member


Specify or revise the values for the CONFIGxx member.
Press ENTER to continue.

Backup CONFIGxx member  . . . . CONFBK01

Update I/O statements . . . . . 1  1. Update member
                                   2. Replace member

 F1=Help     F2=Split    F3=Exit     F5=Reset    F9=Swap
 F12=Cancel
```

Figure 207. Confirm Update CONFIGxx Member

If you select `Update member`, the CHP, DEVICE, and SWITCH statements are replaced and all other statements remain unchanged. If you select `Replace member`, the content of the CONFIGxx member will be CHP, DEVICE, and SWITCH statements exclusively. All other statements formerly present in the member will be removed.

The following illustrates sample generated statements:

```
* CHP, DEV AND SWITCH STATEMENTS GENERATED BY
* BUILD CONFIGXX UPDATE  REQUEST
* 2001-01-09  13:56:28    IODF: BOKA.IODF38
* PROCESSOR: FR38LPAR  PARTITION: F38H      OS CONFIGURATION ID: B710
* I/O CLUSTER: UTCPLX38
CHP (00,01,04),ONLINE
CHP (05),ONLINE,MANAGED
CHP (06,07,08,09,0A,0B,0C,0D,0E,10),ONLINE
CHP (11),ONLINE,MANAGED
.....
DEVICE (0B00-0B1F),(1C),ONLINE
DEVICE (1400-143F),(0C,22,33),ONLINE
DEVICE (1440-147F),(10,1C,44),ONLINE
....
SWITCH (B565,42),NODCM
SWITCH (B565,B6,BC-BE),DCM
```

The default name for the backup member is CONFBKxx. If the name is blanked out, no backup is saved.

You can also invoke this task in batch mode. See "Build I/O configuration data" on page 301 for a description of the job control information that you need to specify when building a CONFIGxx member.

Process the Display M=CONFIG(xx) command

HCD provides a dialog function to compare the information in the CONFIGxx member for the system in a sysplex with the hardware configuration. The comparison is carried out at the target system and any responses are displayed in a message list.

You can invoke the function from the Active Sysplex Member List by selecting the action ***Process DISPLAY M=CONFIG(xx) command.*** This displays the Process Display M=CONFIG(xx) Command panel.

```
                 Process DISPLAY M=CONFIG(xx) Command


 The DISPLAY M=CONFIG(xx) command is executed on the selected target
 system. Specify or revise the suffix for the CONFIGxx member of
 SYS1.PARMLIB. Press ENTER to continue.

 System  . . . . . . . . : SYSTEMA

 Suffix of CONFIGxx member  . . __



  F1=Help    F2=Split   F3=Exit    F5=Reset   F9=Swap   F12=Cancel
```

Figure 208. Process Display M=CONFIG(xx) Command

Here, the suffix for the member to be used must be specified.

The results of this action are displayed in the HCD message panel.

Switch IOCDS for next POR

HCD allows you to specify an IOCDS that will be used for the next POR either while building IOCDSs or as a separate action without the need to build an IOCDS. Depending on the environment you are working, you have to use different panels to switch the IOCDS:

- Switch IOCDS for processor without SNA address defined
- Switch IOCDS for a processor in a processor cluster with SNA address defined
- Switch IOCDS for systems in a sysplex

Switch IOCDS for processor without SNA address

The following procedure is only recommended for processors that do *not* have an SNA address defined. For a detailed description of the following dialog sequence, refer to "Build an IOCDS" on page 179.

1. On the ***Primary Task Selection*** panel, specify the name of a production IODF and select ***Activate or process configuration data***.
2. From the resulting panel select ***Build IOCDS***. HCD displays the Processor List.
3. On the Processor List, select the processor and press the Enter key. HCD displays the IOCDS List (see Figure 176 on page 179).
4. On the IOCDS List, select the IOCDSs you want to use for next POR and select ***Switch IOCDS*** from the context menu (or action code **S**).

If the HSA token is available, the HSA token is compared with the processor token. If the HSA token matches the processor token, the ***Switch IOCDS*** action is performed. A warning message is issued, if the date in the IOCDS update record is an earlier date than the date of the last CSS update. If the HSA token does not match the processor token in the IODF, the action ***Switch IOCDS*** is not performed.

If the HSA token is not available, the serial number of the processor defined in the IODF is compared with the serial number of the active processor. If the serial numbers cannot be found, the types of the processors are compared. If the processor definition in the IODF matches the active processor, the action ***Switch IOCDS*** is performed, otherwise the procedure is not performed.

Switch IOCDS for processors in a processor cluster with SNA address defined

The following procedure describes how to build an IOCDS for processors in a processor cluster *with* an SNA address defined. For a detailed description of the following dialog sequence, refer to "Build processor cluster IOCDSs" on page 181.

1. On the ***Primary Task Selection*** panel, select ***Activate or process configuration data*** and from the resulting panel select ***Build and manage processor cluster IOCDSs, IPL attributes and dynamic I/O changes.***. The ***Processor Cluster List*** is displayed (see Figure 178 on page 182).
2. On the ***Processor Cluster List***, select the CPCs for which you want to switch the IOCDSs and ***Work with IOCDSs*** from the context menu (or action code **S**). HCD displays the IOCDS List (see Figure 179 on page 182).
3. Use the ***Switch IOCDS*** action (or action code **S**) to mark an IOCDS as the IOCDS that is used for next POR. The `Status` field will be set accordingly.

   You can only switch to an IOCDS that has an IOCDS/HSA token match or to an IOCDS of a processor that is not activated ('POR-required' status).

Switch IOCDS for systems in a sysplex

In addition to dynamically activating a sysplex, you can also specify the IOCDSs to be used for the next POR.

1. Select one or more systems from the Active Sysplex Member List (see Figure 192 on page 200) and the ***Switch IOCDS for next POR*** action from the context menu (or action code **S**). The Switch IOCDS panel is displayed.

```
                              Switch IOCDS
                                                                  Row 1 of 3
Command ===> ________________________________________ Scroll ===> PAGE

Specify the IOCDS(es) for next POR, then press Enter.

System   Processor Config.  EDT Switch   Active
Name     ID        ID       ID  IOCDS +  IODF
IRD4     ECL2      MVSVM    00  __       SYS4.IODF10
IRD5     ECL2      MVSVM    00  __       SYS4.IODF10
IRD6     R35       MVSVM    00  __       SYS4.IODF10
***************************** Bottom of data ******************************
```

Figure 209. Switch IOCDS

2. In the column Switch IOCDS, specify the IOCDS that is to be used for the next POR and press the Enter key.

Note: If you prompt for IOCDS, you might see outdated IOCDS update dates, if it was not possible with the last write IOCDS action to update the IOCDS records in the IODF. To ensure update of the IOCDS dates, use option 2.2 (write IOCDS) for the processor in focus.

Specify an IODF for IPL

z/OS HCD Planning gives a detailed description of how to specify an I/O configuration at IPL. This topic summarizes the main aspects you have to consider when specifying an IODF for IPL.

Notes®:

1. A production IODF must have a single extent. If the production IODF has multiple extents, the IPL process results in a WAIT state (wait state code '0B1', reason code '002'). HCD issues error message CBDA009I if a production IODF cannot be built in a single extent.

2. A production IODF must not be allocated with the SMS EXTENDED attribute. If the production IODF is allocated as an EXTENDED LINEAR dataset, the IPL process results in a WAIT state (wait state code 0B1, reason code 005).

IODF processing at IPL

When you perform an IPL, the production IODF that defines the configuration to the system is selected and used.

On the LOAD parameter, you specify the device containing the IODF for IPL and the identifier for the LOADxx member. In the LOADxx member of SYSn.IPLPARM or SYS1.PARMLIB, you identify the IODF by the IODF statement. The IODF statement consists of an IODF *prefix* and an IODF *suffix*.

- The IODF prefix is an 8-byte high-level qualifier of the IODF data set name. For example, BPAN is the IODF prefix for the IODF data set BPAN.IODF01.
- the IODF suffix is the two-digit hexadecimal number that is part of the IODF name. For example, 01 is the IODF suffix for IODF01. If you do not specify a suffix, the system searches for an IODF sequentially in a numerically ascending order starting with the IODF suffix 00. If you specify ** as the suffix, the system uses the descriptor fields to find the current IODF.

During IPL, the system uses the LOADxx member that it finds first when searching in the following order:

1. The system first searches the IODF volume for SYS0.IPLPARM through SYS9.IPLPARM, in that order. Therefore, it is recommended to use SYS0.IPLPARM for best IPL performance.
2. If it does not find a SYSn.IPLPARM, it searches the IODF volume for a SYS1.PARMLIB.
3. If it does not find SYS1.PARMLIB on the IODF device, it searches for SYS1.PARMLIB on the IPL device.
4. If it does not find a SYS1.PARMLIB on the IPL device, a coded non-restartable wait state is loaded (WAIT code X'0B1').

For a detailed description of this process refer to *z/OS HCD Planning*.

Chapter 10. How to print and compare configuration data

Overview

This information unit describes how to:

- Print configuration reports (channel subsystem, switch, OS configuration data, and CTC connections)
- Print a report of the I/O paths of the actual system compared to the defined I/O configuration
- Print a report of the supported hardware or an I/O definition reference
- Create or view a graphical report of the I/O configuration
- Compare functions (IODFs and CSS/operating system views)
- Print list panels
- View and print the activity log

Print configuration reports

You can use HCD to generate several types of reports about the configuration data in an IODF:

- Channel Subsystem (CSS) Report
- Switch Report
- Operating System (OS) Report
- CTC Connection Report
- I/O Path Report
- Supported Hardware Report
- I/O Definition Reference

In the HCD profile definition, you have the option of printing textual reports in upper case only or defining the number of lines per page (see "Options for text reports" on page 21).

Examples of these reports are shown in Appendix B, "Configuration reports," on page 337.

Channel Subsystem Report

The Channel Subsystem Report contains all configuration data that is used by the channel subsystem. If the IODF contains data for more than one processor or logical partition, you can limit the report to the data for one processor or partition. If you limit the report to one partition, it will generate information only for channel paths, which have the partition in the access list. Channel paths that have that partition in a candidate list will not be taken into consideration.

You can select four types of reports:

- **CSS summary reports** include summary reports about:
  - Processors
  - Channel subsystems
  - Partitions
  - PCIe functions
  - PCHIDs
  - IOCDSs
  - Channel paths

© Copyright IBM Corp. 1994, 2022

  - Control units
  - Devices

  The processor and partition reports are not printed if you limit the CSS summary reports to the data for one processor or partition.
- **Channel path detail reports** include reports about:
  - Channel paths
  - CF channel path connectivity
- **Control unit detail report**
- **Device detail report**

Switch Report

The Switch Report contains details about the switch definition, its configurations and the port definitions.

If the IODF contains data for more than one switch, you can limit the report to the data for one switch and the configurations for this switch. In this case, you do not get a switch summary report.

Operating System Report

The Operating System Report contains the configuration data that is used by z/OS or z/VM. If the IODF contains data for more than one operating system, you can limit the report to the data for one operating system. You can select three types of reports:

1. The OS device report includes reports about operating systems and OS devices.

   The operating system summary report is not printed if you limit the OS device report to the data for one operating system.
2. OS console report
3. EDT report (MVS-type only)

CTC Connection Report

The CTC Connection Report contains CTC connections of your configuration that are defined through a switch or point-to-point. In case of incorrect definitions, the report also contains a list of messages with diagnostic information.

If the IODF contains more than one processor or logical partition, you can limit the report to the data for one processor or partition.

For capabilities and restrictions that apply to the presentation of CTC connections in the configuration diagram and the CTC Connection Report, refer to “Restrictions applying to the CTC Connection List” on page 138.

I/O Path Report

The I/O Path report shows the physically sensed I/O paths (with physical types) of the active system compared with the logical definitions of the paths (also the object types) of a specific IODF.

On the Limit Reports panel (Figure 211 on page 220) the active configuration to sense the configuration from, can be specified by indicating a SYSPLEX and/or SYSTEM name. If nothing is specified, the data is taken from the local system.

For more information, see “Job statement information used in panels” on page 64.

Supported Hardware Report

The Supported Hardware Report contains information about the processors, control units, and devices supported in your installation. This report can only be generated using the batch facility as described in "Print configuration reports" on page 304.

This report is generated directly from the UIMs. Therefore, it reflects the latest UIM levels installed.

I/O Definition Reference

The I/O Definition Reference contains a description of the parameters to define the device to the Channel Subsystem, and a description of the parameters and features to define the device to the operating system.

This report is generated directly from the UIMs. Therefore, it reflects the latest UIM levels installed.

This report can only be generated using the batch facility as described in "Print configuration reports" on page 304.

How to print a textual report

1. On the ***Primary Task Selection*** panel, select ***Print or compare configuration data***.
2. On the resulting Print and Compare Configuration Data panel, select ***Print configuration reports***. HCD then displays the following panel:

```
               Print Configuration Reports


 Select the types of report you want, and specify the values below.

 IODF name  : 'DOCU.IODF01'

 Types of report                  Limit report(s)
 _  CSS report                    1   1.  Yes
 _  Switch report                     2.  No
 _  OS report
 _  CTC connection report
 _  I/O path report

 Job statement information
 //         JOB (ACCOUNT),'NAME'
 //*
 //*
 //*
 //*
 //*

  F1=Help     F2=Split    F3=Exit     F5=Reset    F9=Swap    F12=Cancel
```

Figure 210. Print Configuration Reports

3. Enter the required data.

   When you select a CSS or OS report an additional panel appears on which you can select one or more report types.

   If a data set is pre-allocated the logical record size must be 133. You can allocate the report output data set HCDRPT using the job step name GO.

4. When you select to limit the reports, possible for CSS, Switch, OS and CTC connection reports, the Limit Reports panel appears that allows you to specify a processor ID, partition name, OS configuration ID and a switch ID. When you select an I/O Path report, the Limit Reports panel always appears. This is because limiting an I/O Path report is required. Default values for the processor ID, the partition name (for an LPAR processor) and the OS configuration ID are then already filled in. These values are based on the active configuration. The system name identifies the system of a sysplex for that the I/O Path report is to be generated. The default is the local system. The sysplex name specifies the sysplex of the system for that the I/O Path report is to be generated. If you specify the sysplex, you must also specify the system name. If you do not specify the sysplex, the system name is the VTAM® application

name of the host that the I/O Path report is to be generated for. If you selected to print more than one report type, the limitations specified on the Limit Reports panel apply to all of them.

When limiting a CSS report to a single partition, the report will show channel paths, control units and devices attached by the access list as well as those attached by the candidate list.

```
                   Limit Reports


 To limit the reports, specify the following criteria related
 to the IODF in access.

                                      Applicable for:
 Processor ID . . . . ________  +  CSS, CTC, I/O path reports
 Partition name . . . ________  +  CSS, CTC, I/O path report
 OS configuration ID  ________  +  OS, I/O path report
 Switch ID  . . . . . __        +  switch report

 Specify the sysplex and system name to gather the actual
 configuration from.  (Blanks default to the local system.)

 Sysplex name . . . . ________     I/O path report
 System name  . . . . ________     I/O path report

  F1=Help     F2=Split    F3=Exit     F4=Prompt   F5=Reset
  F9=Swap    F12=Cancel
```

Figure 211. Limit Reports

The submitted job only starts if the IODF is accessed in read mode. If it is accessed in update mode, the job waits until you access another IODF or exit HCD.

You can also print reports using the batch mode. See "Print configuration reports" on page 304 for a description of the job control information that you need to specify when printing a report.

Create or view graphical configuration reports

HCD offers you to print and view a graphical representation of the I/O configuration based on the definitions in the IODF. The reports can be either stored in a data set for printing on an AFP printer (such IBM 3820 or IBM 3800) or via GDDM later on, or displayed on an IBM 3270 terminal with graphical capability.

The graphical report function allows you to print or view five types of reports:

- The **LCU report** shows all logical control units defined for one processor.
- The **CU report** takes a control unit as focal point and shows the connections to the processors and the devices of the IODF. On request, it shows the switches as well.
- The **CHPID report** shows the defined channel paths for a processor and the switches, control units, and devices attached to the CHPID.
- The **Switch report** takes a switch (FICON director) as focal point and shows the processors, chained switches, and control units with devices attached to the switch.
- The **CF connection report** takes a coupling facility as focal point and shows all connections that exist between the coupling facility and the other processors defined in the IODF.

Prerequisites

For printing

To process the reports for printing you need one of the following:

- BookMaster Release 3.0 or higher
- DCF/GML Release 4.0
- GDDM Version 2.1 or later

To print the reports you need an AFP printer, such as IBM 3820 or IBM 3800 (not required for GDDM).

To store the output in GDF format, you have to use a terminal with a screen size of 80 columns, for example a 3278-2.

In the HCD profile, specify whether the output of this function can be processed with BookMaster, DCF, GML, or GDF (keyword GCR_FORMAT). BookMaster is the default. To use DCF or GML format, specify a mono- space font using the keyword GCR_FONT. For example, specify `GCR_FONT = X0GT20` (Gothic Text 20-pitch) for a 3820 printer. For more information about the HCD profile, refer to "Defining an HCD profile" on page 16.

For viewing

To view the report on an IBM 3270 terminal with graphical capability, GDDM must be installed on your system. Refer to "Setting up HCD" on page 13 on how to setup the GDDM support.

Use a terminal with a screen size of 80 columns, for example a 3278-2. This display function does not work on terminals (or terminal emulations) with a screen size of 132 columns. HCD uses ISPF to create the GDDM display, which means that terminals running in partition mode or terminals with multiple screen widths, including 3290 and the 3278 Mod 5, are not supported for graphics interface mode.

In the HCD profile, you can specify the colors used for displaying the graphic (see "Defining an HCD profile" on page 16). If you change the default colors, make sure that foreground and background color match.

How to create a graphical configuration report

To print or view a configuration, use ***Create or view graphical configuration report*** on the ***Primary Task Selection*** panel. The dialog is described in "Using the 'Create or View Graphical Configuration Report' option" on page 221.

To view objects in context of their attached objects you can also select an object from an object list and use the ***View graphically*** action from the context menu (or action code **h**). The following object lists support this possibility:

- Channel path list
- Control unit list
- I/O device list (only for devices that connect to a control unit)
- Partition list
- Switch list

For example, from the Switch List, you can view a switch together with all objects that are attached to the switch. This can help you, for example, to immediately verify your definitions while defining your configuration.

Using the 'Create or View Graphical Configuration Report' option

1. Select ***Create or view graphical configuration report.*** on the ***Primary Task Selection*** panel.
2. The Create or View Graphical Configuration Report panel appears.

```
              Create or View Graphical Configuration Report


 Select the type of report you want, and specify the values below.

 IODF name . . . . . . : 'BPAN.IODF00.WORK'

 Type of report  . . . . 2_  1.  LCU report
                             2.  CU report
                             3.  CHPID report
                             4.  Switch report
                             5.  CF connection report

 Processor ID  . . . . . ________  + (for an LCU or a CHPID report)
 Partition name  . . . . ________  + (to limit an LCU or a CHPID report)

 Output data set . . . . 'BPAN.IODF00.PRINT'

 Output  . . . . . . . . 1   1.  Write to output data set
                             2.  *View

 * = requires GDDM
```

Figure 212. Create or View Graphical Configuration Report

`Type of report`: Select the type of report you want to create.

`Processor ID` and `Partition name`: Enter the required data for an LCU or a CHPID report.

`Output`: Select whether you want to write the output to an output data set for printing or to display the output on your terminal.

`Output data set`: For BookMaster, GML, or DCF processing, the output data set must be a sequential data set or a member of a partitioned data set. If the PDS or the sequential data set does not exist, it will automatically be allocated (record length 200, record format fixed blocked).

For creating output for GDF, specify a member of a partitioned data set. If the data set does not exist, it will automatically be allocated (record length 400®, record format fixed blocked). If the data set already exists, it is overwritten with the new data, you are not asked to confirm replacement. The output is written into different members, one for each segment (see "Printing the output" on page 223 for a definition what a segment is). The member names are up to eight characters long. They are derived from taking up to seven characters from the member name specified in the output data set field and adding a number. For instance, if the name was specified as `'BPAN.IODF00.PRINT(SWITCHES)'`, the member names would be `SWITCH01`, `SWITCH02`, … `SWITCH10`, and so on.

3. When pressing the Enter key, the Define Report Layout panel appears. The following example shows the panel for a CU report.

```
                       Define Report Layout


 Specify the values below for report type: CU

 Include index  . . . 1_  1.  Yes     Include partitions . 1_  1.  Yes
                          2.  No                              2.  No

                                      Only for a CU or CHPID report:
 Include CTC, CF CUs. 1_  1.  Yes     Include switches . . 1_  1.  Yes
                          2.  No                              2.  No

 Show CU  . . . . . . 1_  1.  Serial number
                          2.  Description

 To limit a CU report, specify only one of the following:
 Range  . . . . . . . ____  -  ____
 Type . . . . . . . . _____________  +
 Group  . . . . . . . ________  +
```

Figure 213. Define Report Layout

Select what you want to include in the graphical report. To limit the control units to be shown in a CU report, you can specify either the range, type, or group (for example, DASD) of the control units.

4. After pressing the Enter key the report is written to an output data set or shown on the terminal. See "Printing the output" on page 223 and "Viewing the output" on page 223 on how to proceed.

You can also create graphical reports using the batch mode. See "Create a graphical configuration report" on page 307 for a description of the job control information that you need to specify when printing a report.

Printing the output

1. Process the output data set using BookMaster, DCF, GML, or GDF. While processing it is recommended that you specify the following parameters:

   Indexing
   To print the index you selected on the Define Report Layout panel specify INDEX for BookMaster and GML processing

   Full page
   To use the full page for the report SYSVAR S is to be set to 1 for DCF processing. Note that in many installations offset is used as default.

   Rotate printout
   Specify a parameter to print the report in landscape format, that means to rotate the printout by 90 degree.

2. Print the report.

HCD tries to display a report on one page. If a report is too large for one page, HCD divides the report into segments and shows each segment on an extra page. If a CU report, for example, shows more than 8 control units, HCD shows the control units of the same type in one segment on an extra page. If a segment is too large for one page, HCD continues the segment on the next page. You can specify the `GCR_COMPACT=YES` keyword in the HCD profile to see more objects on one page.

For an example of a report, see "Graphical configuration reports" on page 375.

Viewing the output

The following figure shows an example of the panel when viewing a report.

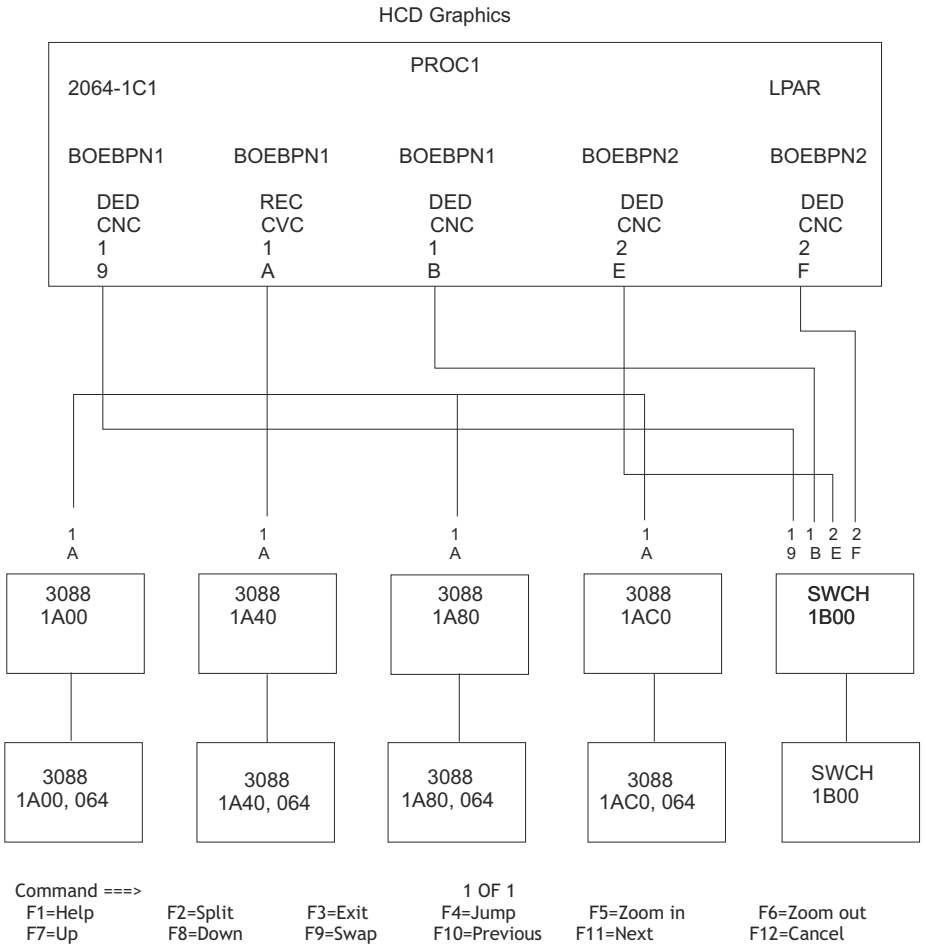

Figure 214. Viewing a sample report

HCD tries to display the entire configuration on one panel. If a report is too large for one panel, HCD divides the report into segments and shows each segment on an extra panel. If a CU report, for example, shows more than 8 control units, HCD shows the control units of the same type in one segment on an extra panel. You can move from segment to segment by using the Next and Previous function keys.

If a segment of control units is too large for the panel, you can scroll upwards, downwards, to the left and to the right.

The following list describes specific function keys while viewing a graphical report.

F4=Jump
You can use this function only when you have displayed the graphical report using the task ***Create or view graphical configuration report*** on the ***Primary Task Selection*** panel. It displays the action list of the HCD dialog that contains the object you selected with the cursor. Any change made to the configuration on the action list will not be reflected in the graphical report when you return to it. Use the REFRESH command to reflect the changes made to the objects currently shown on the display (see "Refresh Command" on page 226).

F5=Zoom in
Makes the graphical display bigger, so you can see the details of an object. The position of the cursor identifies the lower left corner of the part you want to enlarge. If the cursor in not positioned, HCD takes the center of the currently displayed report.

F6=Zoom out
Makes the graphical display smaller, so you can see more of a report on one panel.

F7=Up
Scrolls upwards.

F8=Down
Scrolls downwards.

F10=Previous
Moves to the previous segment of a report, if any.

F11=Next
Moves to the next segment of a report, if any.

F19=Left
Scrolls to the left.

F20=Right
Scrolls to the right.

SAVE command

You can use the SAVE command to store a graphical configuration displayed on your screen in a member of a partitioned data set (PDS) in GDF format for printing with GDDM.

Before you use this command, the partitioned data set has to be allocated to ddname ADMGDF. The records of this PDS must have a record length of 400.

Specify SAVE (or just SA) and the member name, into which you want to save the data, on the command line. The syntax of the SAVE command is as follows:

SAVE command syntax

```
►►─┬─ SAVE ─┬─ member_name ─►◄
   └─ SA ───┘
```

member_name
specifies the name of the member to contain the graphical configuration you want to print. Use a different name for each SAVE command, otherwise the data will be overwritten. The name may be up to eight characters long.

LOCATE command

You can use the LOCATE command to center and highlight a specific object of the report. When you locate a partition, channel paths, or coupling facility partition, the connections to the object are highlighted instead of the object itself.

Specify LOCATE (or just L) and the object you want to locate in the command line. For objects that are associated with another object (for example, CHPIDs that are associated with a processor), you have to specify this object as well.

Locating multiple objects with the same ID

The LOCATE command first searches for an object in the currently displayed panel. If the object is not found it starts with the first segment and continues to the right until an object has been found. To find the other objects with the same ID, use the + and - parameter of the LOCATE command. The + parameter searches for the next object to the right, the - parameter to the left.

The syntax of the LOCATE command is as follows:

LOCATE command syntax

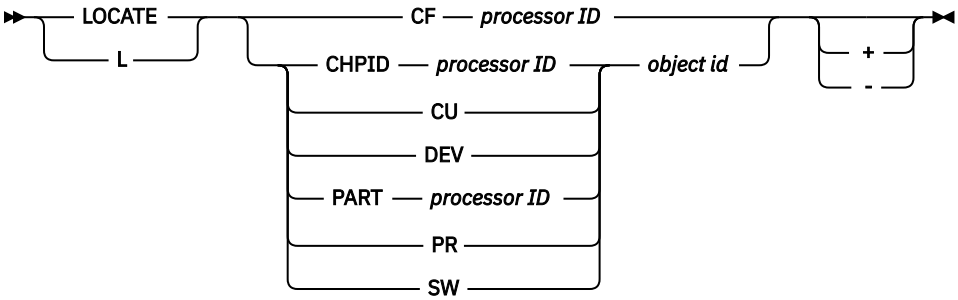

CF
Coupling Facility

CHPID
Channel path

CU
Control unit

DEV
Device

PART
Partition

PR
Processor

SW
Switch

Example

To locate CHPID 27 of processor SYSA, type

```
L CHPID SYSA 27
```

Refresh Command

When you jump to an action list using F4=Jump and change objects in this list, use the REFRESH command on return to the graphical display to refresh the graphic with the changes made.

REFRESH applies to all objects that were currently shown on the graphical report when pressing the F4=Jump key, that is, added objects or those, for which you changed the ID, will not appear in the refreshed graphic.

Valid abbreviation of the REFRESH command is RE.

How to print list panels

You can use the SAVE command to save the data that is currently displayed on HCD list panels into a data set. The data set can be used for printing.

You can also save and print lists that are filtered. If you use the ***Set Filter*** option from the ***Filter*** action bar choice, you can, for example, print all channels of a processor that are not connected to a control unit.

The SAVE command is available on the following lists:

- Operating system configuration List
  - EDT List
  - Esoteric List

  - Esoteric/Device List
  - Generic
  - Generic/Device List
  - Console List
- Switch List
  - Port List
  - Switch Configuration List
  - Port Matrix
- Processor List
  - PCIe Function List
  - Channel Subsystem List
  - Channel Path List
  - Partition List
- Control Unit List
- I/O Device List
- Configuration Package List
  - Configuration Package Object List
- CTC Connection List
- I/O Path List
- I/O Autoconfiguration lists:
  - Discovered New or Changed Controller List
  - Proposed Control Unit List
  - Proposed Control Unit / Device List
- CPC Image List

On these list panels, perform the following steps:

1. Enter the command

```
SAVE
```

2. The Save List appears:

```
                            Save List

Specify the following values.

Output data set  ____________________________________________________

Additional remarks (for example, the filter criteria)
with DCM 2 _________________________________________________________
___________________________________________________________________
```

   The output data set can be a sequential data set or a member of a partitioned data set. If the data set does not exist, it will be automatically allocated (record length 300, record format fixed block). The name of the data set is saved for the next HCD session.

   In addition you can specify two lines of optional comments that appear under the header of your ouput.

3. A result of a printed data set may look like the following example. Note that the column headers are the same as shown on the panel itself.

```
 BOKA.IODF52.WORK - 2011-12-16  14:00 - Channel Path List 1

 with DCM 2

 Processor : PROC35       Channel Subsystem ID : 0 3
                                Partitions : 1=OS R35LP01   2=OS R35LP02   3=OS R35LP03   4=OS R35LP04   5=OS
R35LP05
                                             6=OS R35LP06   7=OS R35LP07   8=OS R35LP08   9=OS R35LP09   A=OS
R35LP10
                                             B=OS R35LP11   C=OS IRD7      D=OS R35LP13   E=OS R35LP14   F=OS
R35LP15

       CHID            DynEntry Entry +          I/O Cluster                                  ----------
Partitions---------
 CHPID AID/P Type Mode Switch + Sw Port Con Mng  Name        Description                      1 2 3 4 5 6 7 8 9 A B
C D E F 4

-----------------------------------------------------------------------------------------------------------------------
------
 0C    130   OSC  SPAN __       __ __   _   No   ________    9.152.32.189 BL19 BT32-3         _ _ _ _ _ _ _ _ _ _ a
_ _ _ c
 0E    1E1   CFP  SPAN __       __ __   Y   No   ________    to IRD7/8 as CF on Proc05 0E     _ _ _ _ _ _ _ _ _ _ _
a _ _ _
 0F    1E9   CFP  SPAN __       __ __   Y   No   ________    to IRD7/8 as CF on Proc05 0F     _ _ _ _ _ _ _ _ _ _ _
a _ _ _
 12    1F2   CNC  SHR  1A       __ __   _   No   ________    for VSE Tapes                    _ _ _ _ _ _ _ _ _ _ a
_ _ _ _
 30    220   FC   SPAN 10       10 2A   _   No   ________    Exp4 LX Z/OS and 1 CU z/VM       _ _ _ _ _ _ _ _ _ _ _
a a a a
 31    590   FC   SPAN 14       14 8F   _   No   ________    EXp4 SX                          _ _ _ _ _ _ _ _ _ _ a
_ _ _ a
 34    200   FC   SPAN 14       14 0B   _   No   ________    Exp8 SX  DS8K1 DS8K13 Tape       a a a a a a a a a a a
_ a a a
 35    202   FC   SPAN 14       14 1B   _   No   ________    Exp8 SX  DS8K13 ESS22 DS8K0      a a a a a a a a a a a
_ a a a
 36    201   FCP  SPAN __       __ __   _   No   ________    Exp8 SX 3C00,62+FC/FD  14/109    a a a a a a a a a a _
_ a a a
 37    281   FCP  SPAN __       __ __   _   No   ________    Exp8 SX 3D00,62+FC/FD  14/125    a a a a a a a a a a _
_ a a a
 40    280   FC   SPAN 14       14 8B   _   No   ________    EXp8 SX  DS8K1 DS8K13            a a a a a a a a a a a
c a a a
 41    282   FC   SPAN 14       14 9B   _   No   ________    Exp8 SX  DS8K13 ESS22 DS8K0      a a a a a a a a a a a
_ a a a
 42    412   FCP  SPAN __       __ __   _   No   ________    ...  SX n.a.  ??00,64     14/357 a a a a a a a a a a _
_ a a a
```

Figure 215. Example of a printed list

1
Header with IODF name, date, time, list name

2
Optional comments specified on Save List

3
Identifier of higher-level object, for example the processor name (and channel subsystem ID if applicable) when you print the channel path list

4
Column headers as shown on the panel itself

HCD compare functions

HCD offers functions to compare IODFs and device definitions for a selected CSS or operating system and to report the differences:

- “Compare IODFs” on page 228
- “Compare CSS / operating system views” on page 232

Compare IODFs

You can use the ***Compare IODFs*** function to compare two IODFs and report the differences between them. For greater clarity, you can limit the compare reports to certain perspectives of the IODF:

- The ***Processor Compare Report*** shows differences in the properties of channel subsystems, partitions, CHPIDs, control units, and devices.
- The ***Switch Compare Report*** shows differences in the properties of switches and switch configurations.
- The ***OS Configuration Compare Report*** shows differences in device parameters, in features, in EDTs, in esoterics, in generics defined for EDTs, and consoles.

To compare IODFs, do the following:

1. Select ***Print or compare configuration data*** on the ***Primary Task Selection*** panel.
2. On the Print or Compare Configuration Data panel, select ***Compare IODFs***. The following panel is displayed:

```
                              Compare IODFs

Select the compare reports you want, and specify the following values.

New IODF name : 'DOCU.IODF01'
Old IODF name . ___________________________________  +

Select compare reports                   Limit ?
             _  Processor                  _  Yes
             _  Switch                     _  Yes
             _  Operating system           _  Yes

Job statement information
//         JOB (ACCOUNT),'NAME'
//*
//*
//*
//*
//*

 F1=Help     F2=Split  F3=Exit  F4=Prompt   F5=Reset    F9=Swap
 F12=Cancel
```

Figure 216. Compare IODFs

On this panel, select one or more compare report(s). In addition, you can set the limit option. When the limit option is set, the related limiting panels will come up.

On the ***Limit Processor Compare Reports*** panel, you can limit the processor compare reports by selecting one or more of the specific compare reports. You can limit the reports by specifying values for a processor or either by specifying values for a channel subsystem or a partition. It is possible to compare an SMP processor to a channel subsystem of an XMP processor. If you want to limit by processor, you must specify the processor IDs for both IODFs. If you limit the processor compare report by partition name, you receive the following results:

- The report will contain the channel subsystem in which the partition is defined.
- Channel path compare will only contain channel paths which have the limiting partition in their access or candidate list.
- Control unit compare will only include the control units related to channel paths which have the limiting partition in their access or candidate list.
- Device compare will only include the devices connected via channel paths which have the limiting partition in their access or candidate list.

```
                Limit Processor Compare Reports

 Select one or more of the processor compare reports.

  _  Processor Compare
  _  Channel Subsystem Compare
  _  PCIe Function Compare
  _  Partition Compare
  _  Channel Path Compare
  _  Control Unit Attachment Compare
  _  Device Attachment Compare
  _  Control Unit Compare
  _  Device Compare

 To limit the reports, specify the following values.

                          New IODF          Old IODF
 Processor ID . . . . . . ________  +       ________  +
 Channel Subsystem ID     _  +              _  +
 Partition name . . . . . ________  +       ________  +

  F1=Help     F2=Split    F3=Exit     F4=Prompt   F5=Reset
  F9=Swap    F12=Cancel
```

Figure 217. Limit Processor Compare Reports

On the ***Limit Switch Compare Reports*** panel, you can limit the switch compare reports by one or more of the specific compare reports. In addition, you can limit the reports by specifying a switch ID for both, the new and the old IODF.

```
                 Limit Switch Compare Reports


 Select one or more of the switch compare reports.

 _  Switch Compare
 _  Switch Port Compare
 _  Switch Configuration Compare
 _  Port Configuration Compare

 To limit the report, specify the following values:

                  New IODF        Old IODF
 Switch ID  . . . __  +           __  +

  F1=Help     F2=Split    F3=Exit     F4=Prompt   F5=Reset
  F9=Swap    F12=Cancel
```

Figure 218. Limit Switch Compare Reports

On the ***Limit Operating System Compare Reports*** panel, you can limit the operating system compare reports by one or more of the specific compare reports. In addition, you can limit the reports by specifying an operating system ID for both, the new and the old IODF.

```
                Limit Operating Systems Compare Reports


 Select one or more of the operating system compare reports.

 _  Operating Systems Compare
 _  EDT Compare
 _  Generic Compare
 _  Generic Update Compare
 _  Esoteric Compare
 _  OS Console Compare
 _  OS Device Compare

 To limit the report, specify the following values:

                          New IODF          Old IODF
 Operating system ID  . . ________  +       ________  +


  F1=Help     F2=Split    F3=Exit     F4=Prompt   F5=Reset
  F9=Swap    F12=Cancel
```

Figure 219. Limit Operating System Compare Reports

How to print a Compare IODFs Report

After you have selected the specific pairs for the compare reports, you can decide what print options to use. The print options are shown on the Select Print Options panel, see Figure 220 on page 231.

If you do not select an option (by only pressing the Enter key), the default print options are used (`Print inserted data`, and `Print deleted data`).

Examples of these reports are shown in Appendix B, “Configuration reports,” on page 337.

```
           Select Print Options


  Select one or more of the following
  options, or ENTER to use the defaults.

  /  Print inserted data
  /  Print deleted data
  _  Print unchanged data
  _  Print unchanged item IDs

   F1=Help       F2=Split      F3=Exit
   F5=Reset      F9=Swap      F12=Cancel
```

Figure 220. Select Print Options (for Compare IODFs only)

When you do not select any option, HCD prints a report of

- IDs of added or deleted objects, and those objects, that have added or deleted relations
- IDs of added relations
- Attributes of objects that are different in both IODFs

When you select the `Print inserted data` option, HCD prints a report of all attributes, and relations of added objects.

When you select the `Print deleted data` option, HCD prints a report of all attributes, and relations of deleted objects.

When you select the `Print unchanged data` option, HCD prints a report of all attributes, and relations of unchanged objects.

When you select the `Print unchanged item IDs` option, HCD prints a report of the IDs of unchanged objects. But this applies only, if the `Print unchanged data` option is not selected.

Compare CSS / operating system views

You can use the ***Compare CSS / operating system views*** function to compare the device definitions of a selected CSS and OS configuration, showing which devices (their numbers and types) are defined to either the CSS or the OS, or both. By using this function you can find out the differences between a hardware (channel subsystem/CSS) and software (operating system/OS) definition in the currently accessed IODF.

```
                        Compare CSS / OS Views


 Specify the following values.

 IODF name . . : 'DOCU.IODF00.FP.NEW'

 CSS view
 Processor ID . . . . ________  +   Partition name . . ________  +

 OS view
 Configuration ID . . ________  +   2   1.  Print all data
                                        2.  Print different data
 Job statement information
 //         JOB (ACCOUNT),'NAME'
 //*
 //*
 //*
 //*
 //*

  F1=Help     F2=Split    F3=Exit     F4=Prompt   F5=Reset    F9=Swap
  F12=Cancel
```

Figure 221. Select Print Options (for CSS/OS Compare only)

When using the ***Compare CSS / operating system views*** function, you are offered the possibility of selecting what to print on the ***Compare CSS / OS Views*** panel, shown in Figure 221 on page 232. The `Print all data` option prints a report of all devices either defined in the CSS or the OS.

The `Print different data` option prints a report of the devices that differ as follows:

- Defined for the CSS, but not for the OS.
- Defined for the OS, but not for the CSS.
- Defined for both, but of different device type.

If you limit the Compare CSS/OS Views Report for the CSS-side to one partition, it will generate information only for those devices that are attached to the channel paths, that have the limiting partition in the access or candidate list.

View and print the HCD activity log

The HCD activity log is described in "Activity logging and change logging" on page 45.

To look at the activity log for an IODF,

1. Select ***Print or compare configuration data*** from the ***Primary Task Selection*** panel.
2. On the Print or Compare Configuration Data panel, select ***View the activity log*** or ***Print the activity log***.

The log has the same format in both cases. For browsing, the log is displayed by the ISPF/PDF browse facility. For printing, the log is written to the ISPF list data set.

Note: HCD maintains an activity log only if this was requested when the IODF data set was created.

Chapter 11. How to query supported hardware and installed UIMs

Overview

This information unit describes how to view system data about:

- Supported processors
- Supported switches
- Supported control units
- Supported devices
- Supported installed UIMs

Your z/OS system has several tables and modules that contain data about the general characteristics of processors, switches, control units, and devices in the system.

HCD uses this data to validate your configuration definition. You might want to look at it during the definition task; it helps you select the correct characteristics when you define your hardware units. You can also use the supported hardware report as a help when defining your configuration. See "Supported hardware report" on page 358 for an example of a supported hardware report and "I/O Definition Reference" on page 374 for an example of an I/O definition reference.

You can view the system data by selecting ***Query supported hardware and installed UIMs*** from the ***Primary Task Selection*** panel or the ***Query*** action from the action bar. Then select the subtask or pull-down choice that you want.

Query supported processors

The option `List supported processors` shows which processors are supported by the system. You can also see which features each processor supports, and its capabilities (such as what types of channel paths the processor supports).

```
                            Supported Processors
                                                 Row 313 of 323 More:       >
Command ===> ___________________________________________ Scroll ===> CSR

Select one to view more details.

  Processor
  Type-Model Support Level
  2965-N20   2965 support, ISM, RCE, UID, CL5
  3906-LM1   3906 LinuxONE Emperor support
  3906-LM2   3906 LinuxONE Emperor support
  3906-LM3   3906 LinuxONE Emperor support
  3906-LM4   3906 LinuxONE Emperor support
  3906-LM5   3906 LinuxONE Emperor support
  3906-M01   3906 support
  3906-M02   3906 support
  3906-M03   3906 support
  3906-M04   3906 support
  3906-M05   3906 support
```

Figure 222. Query supported processors

The two lines in Figure 222 on page 233 marked with 1 and 2 illustrate that processors with different support levels generate more entries in the list of supported processors.

Horizontal scrolling displays additional information on the processors.

© Copyright IBM Corp. 1994, 2022

A # preceding a line indicates that this line and the previous line belong together, because the information of a horizontally scrolled screen does not fit in one line.

```
                           Supported Processors
                                                  Row 313 of 323 More: <
Command ===> ___________________________________________ Scroll ===> CSR

Select one to view more details.

  Processor  Supported
  Type-Model Channel Path Types
  2965-N20   FC,OSD,OSE,ICP,IQD,FCP,OSC,OSN,CIB,OSX,OSM,CS5,CL5
  3906-LM1   FC,OSD,OSE,IQD,FCP,OSC,OSX,OSM
  3906-LM2   FC,OSD,OSE,IQD,FCP,OSC,OSX,OSM
  3906-LM3   FC,OSD,OSE,IQD,FCP,OSC,OSX,OSM
  3906-LM4   FC,OSD,OSE,IQD,FCP,OSC,OSX,OSM
  3906-LM5   FC,OSD,OSE,IQD,FCP,OSC,OSX,OSM
  3906-M01   FC,OSD,OSE,ICP,IQD,FCP,OSC,CIB,OSX,OSM,CS5,CL5
  3906-M02   FC,OSD,OSE,ICP,IQD,FCP,OSC,CIB,OSX,OSM,CS5,CL5
  3906-M03   FC,OSD,OSE,ICP,IQD,FCP,OSC,CIB,OSX,OSM,CS5,CL5
  3906-M04   FC,OSD,OSE,ICP,IQD,FCP,OSC,CIB,OSX,OSM,CS5,CL5
  3906-M05   FC,OSD,OSE,ICP,IQD,FCP,OSC,CIB,OSX,OSM,CS5,CL5
```

Figure 223. Supported Processors

```
                           Supported Processors
                                                 Row 313 of 323 More: <
Command ===> ___________________________________________ Scroll ===> CSR

Select one to view more details.

  Processor   Support   Supported                PCIe
  Type-Model  Level ID  Protocols  WI  RI  DP    Fct
  2965-N20    H161231   D,S,S4     Yes Yes Yes   Yes
  3906-LM1    H170913   D,S,S4     Yes Yes Yes   Yes
  3906-LM2    H170913   D,S,S4     Yes Yes Yes   Yes
  3906-LM3    H170913   D,S,S4     Yes Yes Yes   Yes
  3906-LM4    H170913   D,S,S4     Yes Yes Yes   Yes
  3906-LM5    H170913   D,S,S4     Yes Yes Yes   Yes
  3906-M01    H170913   D,S,S4     Yes Yes Yes   Yes
  3906-M02    H170913   D,S,S4     Yes Yes Yes   Yes
  3906-M03    H170913   D,S,S4     Yes Yes Yes   Yes
  3906-M04    H170913   D,S,S4     Yes Yes Yes   Yes
  3906-M05    H170913   D,S,S4     Yes Yes Yes   Yes
```

Figure 224. Supported Processors

```
                           Supported Processors
                                                 Row 313 of 323 More: <
Command ===> ___________________________________________ Scroll ===> CSR

Select one to view more details.

  Processor  --Highest Number for--  ----------Maximum Number of---------
  Type-Model CUs      Devices        CHPIDs CUs  LCUs Partitions CSS SCHS
  2965-N20   FFFE     FFFF           768    8192 4096 45         3   3
  3906-LM1   FFFE     FFFF                  8192 4096 90         6   4
  3906-LM2   FFFE     FFFF                  8192 4096 90         6   4
  3906-LM3   FFFE     FFFF                  8192 4096 90         6   4
  3906-LM4   FFFE     FFFF                  8192 4096 90         6   4
  3906-LM5   FFFE     FFFF                  8192 4096 90         6   4
  3906-M01   FFFE     FFFF                  8192 4096 90         6   4
  3906-M02   FFFE     FFFF                  8192 4096 90         6   4
  3906-M03   FFFE     FFFF                  8192 4096 90         6   4
  3906-M04   FFFE     FFFF                  8192 4096 90         6   4
  3906-M05   FFFE     FFFF                  8192 4096 90         6   4
```

Figure 225. Supported Processors

You can view channel path, control unit, and device information by placing the cursor in front of a processor and pressing the Enter key. As a sample of this type of information, you see the channel path information in the following diagram:

```
                        View Channel Path Information
                                                                  Row 1 of 13
 Command ===> ____________________________________________________________

 ENTER to view information about allowed channel path type mixes.

 Processor Type-Model  . . . . . : 2964-NC9
     2964 support, ISM, RCE, UID, CL5

 Supported  Maximum  --Max. Number per CHPID-- ---Supported---- Shared
 Type       Number   UA Ranges  Links  Devices Time-out  STADET
 CIB        256                       256     No        No     Yes
 CL5        256                       256     No        No     Yes
 CS5        128                       256     No        No     Yes
 FC         320      256        256    32768   No        Yes    Yes
 FCP        320      1                 480     No        No     Yes
 ICP        32                         256     No        No     Yes
 IQD        32       64                12288   No        No     Yes
 OSC        48       1                 254     No        No     Yes
 OSD        48       16                480     No        No     Yes
 OSE        48       1                 255     No        No     Yes
```

Figure 226. View Channel Path Information

Pressing the Enter key gives you a list of allowed channel path type mixtures. Pressing the Enter key again gives you similar information for control units and devices.

Note:

For IBM processors, you can retrieve an explanation of the processor support level: Position the cursor on the processor support level description 1 and press PF1 to get an enumeration of functions provided by this support level.

Query supported switches

The option `List supported switches` shows the characteristics of each type of switch in the system, such as the port range and the supported channel attachments of each switch.

```
                            Supported Switches

 ENTER to continue.

                Port Numbers  Supported
 Switch Type    Low - High    Channel Attachments
 FCS             00 - FF      FC
 2032            00 - FF      FC
 9032            C0 - FB      CNC,CTC,CVC,CBY
 9032-3          80 - FB      CNC,CTC,CVC,CBY
 9032-5          04 - FB      CNC,CTC,CVC,CBY,FCV
 9033            C0 - CF      CNC,CTC,CVC,CBY
```

Figure 227. Supported Switches

Query supported control units

The option `List supported control units` displays a panel showing a list of available control unit groups, for example the DASD control unit group. Select one control unit group to limit the list of supported control unit types. The Supported Control Units panel appears showing the characteristics of control unit types contained in a group.

```
                Supported Control Units
                                                Row 2 of 28 More:       >
Command ===> _____________________________________ Scroll ===> CSR

Select a control unit to view the list of device types that can be
attached to the control unit.

                           -------Default for-------
  Control Unit  Supported Protocol  I/O Concurrency
  Type          Protocols Used      Level
  2105          S,S4      S         2
  2835-2        D         D         2
  3380-CJ2      S         S         2
  3830-2        D         D         2
  3830-3        D         D         2
  3851          D         D         2
  3880-1        D,S       S         2
  3880-11       D,S       S         2
  3880-13       D,S       S         2
  3880-2        D,S       S         2
  3880-21       D,S,S4    S         2
  3880-23       D,S,S4    S         2
  3880-3        D,S       S         2
```

Figure 228. Supported Control Units

Horizontal scrolling displays additional information on supported channel path type attachments.

```
                Supported Control Units
                                                Row 2 of 28 More: <
Command ===> _____________________________________ Scroll ===> CSR

Select a control unit to view the list of device types that can be
attached to the control unit.


  Control Unit  Supported
  Type          Channel Attachments
  2105          CNC,FC,FCV
  2835-2        BL,CVC,EIO
  3380-CJ2      BL,CVC,EIO
  3830-2        BL,CVC,EIO
  3830-3        BL,CVC,EIO
  3851          BL,BY,CVC,CBY,EIO
  3880-1        BL,CVC,EIO
  3880-11       BL,CVC,EIO
  3880-13       BL,CVC,EIO
  3880-2        BL,CVC,EIO
  3880-21       BL,CVC,EIO
  3880-23       BL,CVC,EIO
  3880-3        BL,CVC,EIO
```

Figure 229. Supported Control Units

You can view which devices can be attached to a certain control unit type by placing the cursor in front of a control unit and pressing the Enter key. As a sample of this type of information, you see the CU - Device Attachment List:

```
           CU - Device Attachment List
                                                  Row 1 of 2
 Command ===> ___________________________ Scroll ===> PAGE

 Following device(s) can be attached to control unit type
 3990

 ENTER to continue.

 Device Type
 3380
 3390
 ******************** Bottom of data **********************
```

Figure 230. CU - Device Attachment List

Query supported devices

The option `List supported devices` displays a panel showing a list of available device groups, for example the DASD device group. Select one device group to view characteristics of device types contained in this group. You can limit the list of device types to view only the device types supported by a specific operating system type. After selecting a group of devices, the Supported Device Type List appears.

```
                          Supported Device Type List
                                                                  Row 13 of 33
Command ===> ___________________________________________ Scroll ===> CSR

Select a device type to view the list of control unit type(s) to which the
device can be attached.

                --OS---   --Support--          -Recommended- -Console--
  Device        Connect   Dyn.  Four- Multi-   Time-  STADET NIP    VM
  Type          MVS  VM         Digit Exposure Out           Elig.  Use
  3370               SS0              No       Yes    Yes           No
  3375               SS0              No       Yes    Yes           No
  3380          SS0  SS0  Yes   Yes   No       Yes    Yes    No     No
  3380-CJ2      SS0  SS0  Yes   Yes   No       Yes    Yes    No     No
  3380A         SS0+ SS0+ Yes   Yes   Yes      Yes    Yes    No     No
  3380B         SS0  SS0  Yes   Yes   Yes      Yes    Yes    No     No
  3390          SS0  SS0  Yes   Yes   No       Yes    Yes    No     No
  3390A         SS0+ SS0+ Yes   Yes   Yes      Yes    Yes    No     No
  3390B         SS0  SS0  Yes   Yes   Yes      Yes    Yes    No     No
  3390D         SS1+      Yes   Yes   Yes      Yes    Yes    No
  3390S         SS1+      Yes   Yes   Yes      Yes    Yes    No
 F1=Help        F2=Split       F3=Exit        F7=Backward    F8=Forward
 F9=Swap       F12=Cancel     F22=Command
```

Figure 231. Supported Device Type List

You can also see what control units each I/O device type can be attached to by placing the cursor in front of a device and pressing the Enter key.

As a sample of this type of information, you can see the Device - CU Attachment List:

```
                  Device - CU Attachment List
                                                   Row 1 of 11
Command ===> ___________________________ Scroll ===> PAGE

Following control unit type(s) support the attachment of
device type
3380

ENTER to continue.

Control Unit Type
NOCHECK
3380-CJ2
3880-13
3880-2
3880-23
3880-3
```

Figure 232. Device - CU Attachment List

Query installed UIMs

The option `List installed UIMs` shows which UIMs are available in the system and which I/O device types are supported by each UIM.

```
                              Installed UIMs
                                                                  Row 1 of 51
Command ===> ___________________________________________ Scroll ===> PAGE

Select one for a list of the devices it supports.

  UIM Name  E Description
  CBDUS001    UIM for 3330, 3333, 3340, 3344, 3350
  CBDUS002    UIM FOR 3375, 3380 ,3390, 3995-151/153, 9345
  CBDUS003    UIM for 3350P and 3351P
  CBDUS004    UIM for 327x devices
  CBDUS005    UIM for Magnetic Tape Devices
  CBDUS011    UIM for 3800
  CBDUS012    UIM for Unit Record devices
  CBDUS013    UIM for 2305-2
  CBDUS014    UIM for CTC Devices
  CBDUS022    UIM for AFP1 and 3820 Printers
  CBDUS023    UIM for 37xx and 7770
  CBDUS024    UIM for 1030, 1050, 1050X, 115A, 2740, 2740C, 2740X, 376
  CBDUS025    UIM for 2741P, 2741C, 83B3, TWX, WTTA
  CBDUS026    UIM for BSC1, BSC2, BSC3
 F1=Help        F2=Split       F3=Exit        F7=Backward    F8=Forward
 F9=Swap       F12=Cancel     F22=Command
```

Figure 233. Installed UIMs

A Y (for Yes) in the E (for Error) column indicates that the respective UIM is in error and treated as not existing.

A ≠ sign in front of a UIM name indicates that it cannot be selected because it is flagged in error.

For each of the installed UIMs you can view a list of supported devices by placing the cursor in front of a UIM and pressing the Enter key. As a sample of this type of information, you can see the View Supported Devices list:

```
                          View Supported Devices
                                                                  Row 1 of 7
Command ===> ___________________________________________ Scroll ===> PAGE

This UIM supports the listed device types.

UIM name : CBDUS002
           UIM FOR 3375, 3380 ,3390, 3995-151/153, 9345

ENTER to continue.

              Generic
              -- or --
Device Type   VM D/T   Description
3375          3375     Direct Access Storage Device
3380          3380     Direct Access Storage Device
3380-CJ2      3380     Direct Access Storage Device
3390          3390     Direct Access Storage Device
3995-151      3390     Direct Access Storage Device
3995-153      3390     Direct Access Storage Device
9345          9345     Direct Access Storage Device
 F1=Help        F2=Split       F3=Exit        F7=Backward    F8=Forward
 F9=Swap       F12=Cancel     F22=Command
```

Figure 234. View Supported Devices

Chapter 12. How to migrate existing input data sets

Overview

This information unit describes how to:

- Prepare the input data sets before migrating them
- Migrate the input data sets using the HCD dialog
- Migrate the input data sets using the HCD batch utilities
- Replace existing configuration data through migration
- Change I/O configurations by editing data sets
- Understand and resolve errors that occurred during migration

HCD allows you to migrate existing configuration data that was defined in IOCP, MVSCP, and HCPRIO input data sets to an IODF.

You can also use the migration to create I/O definitions by editing control statements. Data sets containing the statements corresponding to a specific IODF can be generated using a batch utility. Refer to "Build I/O configuration data" on page 301 for details on which data sets can be built and how to run the build process.

When migrating from input data sets, HCD checks the syntax of the input statements and runs a validation process that checks that the definitions being migrated do not conflict with the I/O configuration rules and with existing definitions in the IODF or with other definitions being migrated.

If HCD detects an error in the input data sets, it issues messages after the migration process has ended.

Note: The migration function has a prerequisite to the High Level Assembler.

Migration sequence

If you want to migrate more than one input data set into a single IODF, comply to the following migration sequence:

1. Migrate all IOCP input data sets
2. Migrate all MVSCP or HCPRIO input data sets

LPAR considerations

If you have a combined IOCP/MVSCP input data set containing definitions for more than one LPAR and the same device number specified for more than one LPAR, migrate this input data set in the following way:

1. Migrate the input data set as IOCP only input data set.
2. Remove the duplicate device number definition and repeat the migration as an MVSCP only input data set. In the appropriate IODEVICE statement, specify the control unit number the device attaches to by means of the CUNUMBR parameter.

Preparing your input data sets for migration

Before you can successfully migrate IOCP, MVSCP, or HCPRIO input data sets, you may need to change the input because HCD does a more rigorous checking of the input statements than IOCP or MVSCP.

To ensure that the migration is successful and that the resulting IODF accurately reflects the physical configuration, ensure that your input data sets apply to the validation rules that will be described. For assistance when checking the definitions in the input statements, you can use the following possibilities:

© Copyright IBM Corp. 1994, 2022

- Select ***Query supported hardware and installed UIMs*** from the ***Primary Task Selection*** panel
- Use the ***Query*** action bar choice
- Use the batch facility "Print a Configuration or Supported Hardware Report"

Data requiring attention

This section details which data may need to be changed and how to change it to ensure a successful migration.

Control unit types

HCD checks whether a specified control unit type is valid. Review your input for invalid control unit types. If applicable, correct the UNIT parameter of the CNTLUNIT statement.

If you do not want to change the type in your input data set, you can edit the HCD profile and specify how a control unit type in the IOCP input data set is mapped to a control unit type in the IODF. Specify one or more of the following keyword:

```
MAP_CUTYPE = xxxxx,yyyy-yy
```

xxxxx
is the control unit type specified in the IOCP input data set

yyyy-yy
is the control unit type and model (optional) to be used in the IODF

For more information about the HCD profile, refer to “Defining an HCD profile” on page 16.

Control unit models

HCD requires, for certain control unit types, the specification of a model. For example, the IBM 3880 control unit requires a model specification. If a control unit type requires a model specification, and if you do not specify one in the input data set, HCD assigns a model to the control unit definitions based on the attached devices and the used control unit protocol. This control unit model is indicated as default model in the UIM (information message CBDA534I is issued). As processing goes on, it can be necessary to change the default model to another model to support the specified protocol (warning message CBDA536I is issued). Or, the default model is changed to attach a device type which is not supported by the default control unit model (warning message CBDA265I is issued).

Note: The sequence of messages is shown in reverse order in the migration log file since the messages are sorted according to decreasing severities. For an example, please see “Errors detected during assembly process” on page 284.

To assign a model to a control unit, change the UNIT parameter of the CNTLUNIT statement in the input data set. Append the model number separated by a dash to the control unit type specification. For example:

```
CNTLUNIT …,UNIT=3880-23
```

To avoid changing the input data sets, you can also add a model number by using the MAP_CUTYPE parameter in the HCD profile as described under “Control unit types” on page 240.

Protocol support for control units

HCD checks the protocols supported by a control unit type. For example, in the IOCP input you may have an IBM 3745 with protocol S incorrectly specified as control unit type 3705. The IOCP program does not check the protocol S specification. To be accepted by HCD as valid input, you have to change the control unit type to 3745.

Device types

For IOCP input data sets

HCD checks the device types for validity and that they can be attached to the specified control unit. Check your IODEVICE statements in the IOCP input data set and make sure that the device types are valid and reflect the true physical device they are defining.

For MVSCP input data sets

HCD supports device types that previously had to be defined as "look-alike" devices for MVSCP. For example, for an IBM 3251 graphic device (previously defined as 2250-3), it is mandatory that the correct device type is defined in the UNIT parameter. HCD validates the PCU parameter, which is different for the IBM 3251 and the IBM 2250-3 graphic devices.

A device whose device type supports the dynamic capability may be defined as dynamic or not dynamic by means of the DYNAMIC parameter. However, there are programs, including customer programs, supplier programs and IBM products, that depend on device related data structures such as UCB and EDT, or use existing operating system services which access these data structures, and are unprepared to handle dynamic changes to these structures.

Therefore, HCD considers devices that are not specified with the DYNAMIC parameter in the IODEVICE statement as "installation-static", as it does if DYNAMIC=NO. That means, that the device might support the dynamic capability, but the installation requests that the device is not treated as dynamic.

Installation-static devices can be dynamically added to the software I/O configuration, but can not be deleted or modified while z/OS is running.

When migrating the MVSCP input data sets, HCD shows **no** value as default with the DYNAMIC and the LOCANY parameter, instead of specifying NO.

For HCPRIO input data sets

HCD supports device types that previously had to be defined as "look-alike" devices for HCPRIO. For example, you can define an IBM 6262 printer device (previously defined as an IBM 4248 printer device in the HCPRIO input data set) with a device type of 6262.

The support for VM type devices has been brought into line with the support for MVS type devices. However, there might be some differences to HCPRIO device type support (for example, concerning the MODEL parameter).

Esoteric token

HCD introduces an esoteric token used during allocation to find the appropriate esoteric for a data set that has been cataloged using the esoteric. You no longer have to maintain a chronological order and may delete and add esoterics without getting access problems for data sets that are cataloged using esoterics.

You may use the HCD profile (see “Defining an HCD profile” on page 16) to tell HCD to assign a token in ascending order to each esoteric when migrating an MVSCP input data set.

If you do not want to assign tokens in ascending order or when you migrate only parts of a configuration using the incremental update function (see “Updating parts of a configuration by migrating input data sets” on page 273), you can use a parameter on the UNITNAME statement. This parameter lets you specify a token for an esoteric to be migrated to HCD, as follows:

```
UNITNAME=…,TOKEN=nnnn
```

nnnn
is a number from 1 to 8999.

You have to specify a token for all esoterics or for none at all. For more information on catalog considerations, refer to “Data sets cataloged with an esoteric device group name” on page 327.

Assembler statements

HCD generates own macro instructions into the logical input data set before processing. This may cause problems with assembler statements you inserted into your input data sets. For example, coding the ISEQ, CSECT, or RMODE instructions may cause a warning message issued by the assembler. As a consequence the migration will be terminated. To avoid this, remove your assembler statements. The generated HCD instructions look as follows:

```
       PRINT OFF
       COPY CBDZPARS
       TITLE 'xxx LISTING'
CBDTXT CSECT
CBDTXT RMODE ANY
       PRINT ON NOGEN
            .
            .
input data set statements
            .
            .
       PRINT OFF
       HCDEND
       END CBDTXT
```

Preparing additional input data sets for migration

This section describes what to consider when migrating more than one MVSCP, IOCP, or HCPRIO input data set into one IODF.

When you migrate additional input data sets into an IODF that already contains definitions, these input data sets may contain control units and devices that are already defined in the existing IODF. HCD assumes that added control units that already exist in the IODF, refer to the same physical control unit, and that the control unit is shared between processors. The following sections describe the rules when a control unit or device is mapped to an existing one and when it is newly defined.

Migrating additional IOCP input data sets

When migrating additional IOCP input data sets, the mapping of control units and devices depends on whether the attached control units are already defined in the IODF or not.

The same control unit number is already defined in the IODF

The control unit is mapped, if both:

- the control unit type is the same, and
- the number and type of attached devices are the same.

If one of these conditions is not fulfilled, the control unit definition is rejected. Figure 235 on page 243 to Figure 237 on page 243 show examples of how control units are mapped. These examples do not show more than two control units attached to devices, but the same rules also apply if more control units are attached.

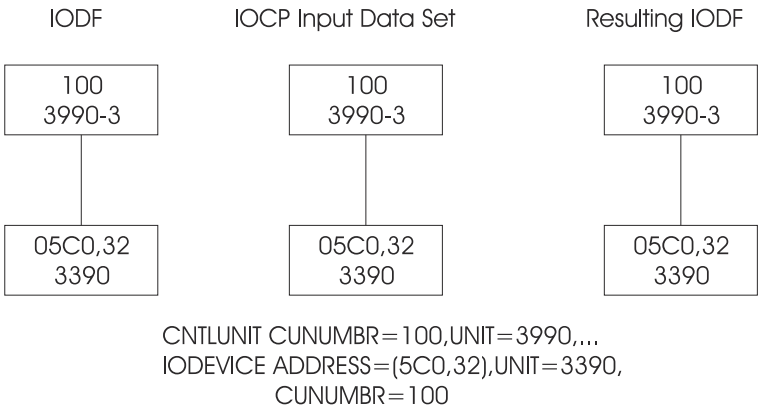

Figure 235. IOCP Migration

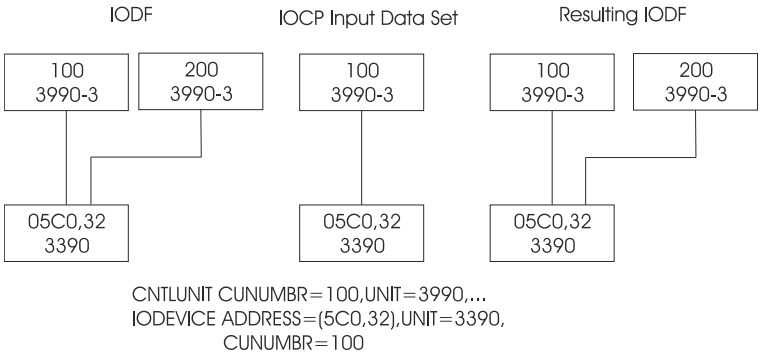

Figure 236. IOCP Migration

The following example shows the same control units in the IODF and IOCP input data set, but the attached devices are shared in the IOCP input data set. In this case, the devices are merged and will be shared after the migration (only if the control units do not connect to the same processor configuration).

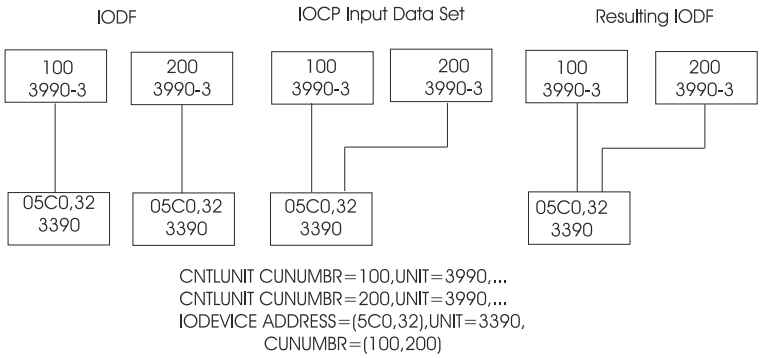

Figure 237. IOCP Migration

The same control unit number is not yet defined in the IODF

In this case:

- a new control unit is defined.
- a new device is defined, unless
  - the device in the input data set is attached to a control unit, to which it is already attached in the IODF. In this case, the new device is mapped to the existing one and attached to both control units (see Figure 238 on page 244.)

    or -

– a device with same device number and type already exists in the IODF and is not attached to any control unit. In this case, the new device is mapped to the existing one and attached to the new control unit (see Figure 239 on page 244).

If none of these conditions is fulfilled, a new device is defined (see Figure 240 on page 244).

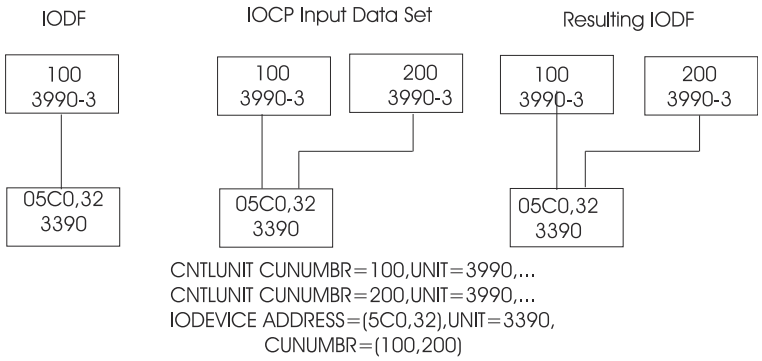

Figure 238. IOCP Migration

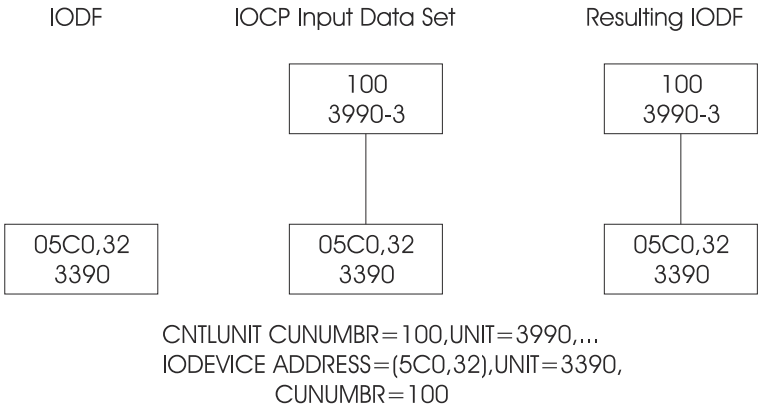

Figure 239. IOCP Migration

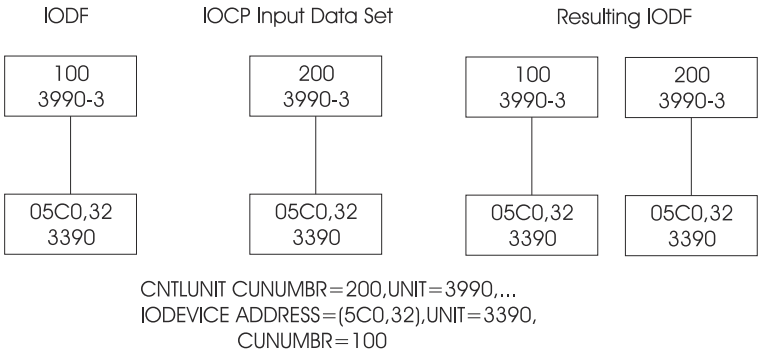

Figure 240. IOCP Migration

Migrating additional MVSCP or HCPRIO input data sets

A device can only be mapped if the device number and device type are the same. If the device number or type is not the same, a new device is defined.

If the device number and type are the same, HCD maps the device according to the following rules:

1. If you specify an associated processor and partition on the Migrate IOCP / MVSCP / HCPRIO Data dialog or with the batch migration utility, HCD maps the new device to a device with the same device number and type connected to this processor and partition (provided that such a device exists).

2. If you do not specify an associated processor and partition or the new device does not attach to the specified processor and partition, HCD checks if the device is attached to a control unit. The device in the input data set is mapped, if:
   - the device in the IODF is attached to the same control unit

     or -
   - the device in the IODF is not attached to any control unit.

   This is illustrated in Figure 241 on page 245.

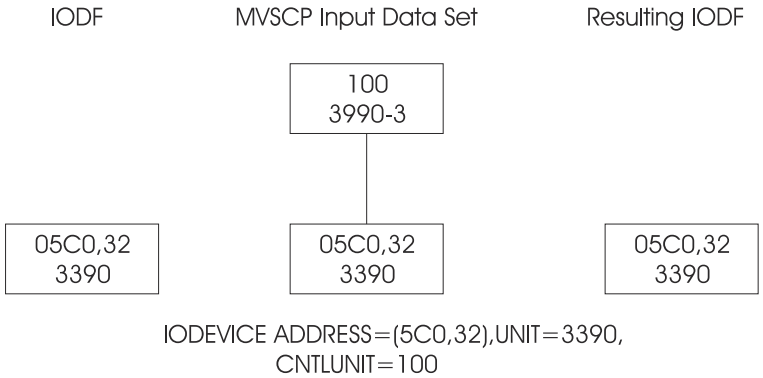

Figure 241. MVSCP Migration

3. If the new device is not attached to a control unit, the device is mapped to the first device found with the same device number and type.

   If the IODF contains several devices with the same device number and type, the device of the MVSCP input data set can be erroneously mapped to a wrong device. To avoid this, you can specify the associated processor and partition on the Migrate IOCP / MVSCP / HCPRIO Data dialog.

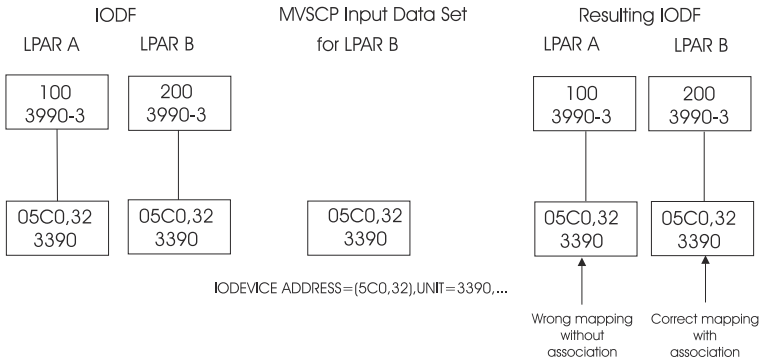

Figure 242. MVSCP Migration

If only a subset of devices in the input data set is already defined in the IODF, this subset is mapped to the existing devices and the remaining new definitions are added.

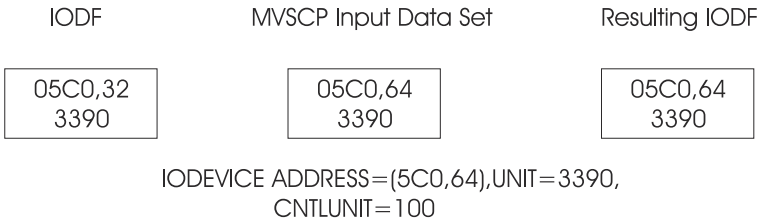

Figure 243. MVSCP Migration

Migrating input data sets using the HCD dialog

The following steps describe how to migrate IOCP, MVSCP, or HCPRIO input data sets to an IODF using the HCD dialog.

Step 1: Specify the work IODF

Before starting the migration, you require a work IODF. You can create a new work IODF or use an existing one.

1. On the ***Primary Task Selection*** panel enter the name of the IODF to which you want to migrate your input data sets.
2. Select ***Migrate configuration data***.

   If you create a new work IODF, a dialog appears on which you have to enter IODF specifications. (Refer to Figure 13 on page 31.)
3. From the following ***Migrate Configuration Data*** menu, select ***Migrate IOCP/OS data***. The ***Migrate IOCP / MVSCP / HCPRIO Data*** dialog shown in Figure 244 on page 246 appears.

Step 2: Migrate the input data sets

```
                     Migrate IOCP / MVSCP / HCPRIO Data


 Specify or revise the following values.

 Processor ID . . . . . . . . . . . . RAP2____  +   CSS ID . . . . . . _  +
 OS configuration ID  . . . . . . . . ________  +

 Combined IOCP/MVSCP input data set . 'HCI.FP.DECKS(FPTST)'
 IOCP only input data set . . . . . . ______________________________________
 MVSCP only or HCPRIO input data set  ______________________________________
            Associated with processor ________  +
                              partition ________  +
 Processing mode  . . . . . . . . . . 2   1.  Validate
                                          2.  Save

 Migrate options  . . . . . . . . . . 1   1.  Complete
                                          2.  Incremental
                                          3.  PCHIDs
 MACLIB used  . . . . . . . 'SYS1.MACLIB'
 Volume serial number . . . ______  + (if not cataloged)
```

Figure 244. Migrate IOCP / MVSCP / HCPRIO Data

1. Specify the identifier of the processor or operating system with which the input data sets will be associated.
   - For an IOCP input data set migration, specify a processor ID.
   - For an MVSCP or HCPRIO input data set migration, specify an OS configuration ID.

   If the specified processor or operating system does not exist in the IODF, a dialog appears that allows you to define a new processor or operating system in the IODF.

   Migrating of a single channel subsystem (CSS) to an XMP processor is supported via the incremental migrate option (see Figure 244 on page 246). Thus, you can consolidate multiple SMP processors on a single XMP processor using the migrate function. When migrating an SMP processor to an XMP processor, you must specify the target CSS. As default, CSS 0 is used.
2. Specify the input data set:
   - If you are migrating a combined MVSCP/IOCP input data set, specify the `Combined IOCP/MVSCP input data set` field.
   - If you are migrating an IOCP input data set only, specify the `IOCP only input data set` field.

- If you are migrating an MVSCP or HCPRIO input data set only, specify `MVSCP only or HCPRIO input data set` field.
- If you have separate IOCP and MVSCP (or IOCP and HCPRIO) input data sets, but want to migrate both into one IODF, specify both the `IOCP only input data set` and the `MVSCP only or HCPRIO input data set` field.

3. The specification of the `Associated with processor` and `partition` fields is only applicable if you migrate MVSCP or HCPRIO input data sets to an IODF.

   Specify a processor and partition with which you want to associate definitions in the input data sets. HCD uses this information to map devices correctly if the IODF contains duplicate device numbers. For more information about this mapping, refer to "Migrating additional MVSCP or HCPRIO input data sets" on page 244.
4. Specify the processing mode:
   - **Validate** causes HCD to check the input and to inform you if errors are discovered. HCD *does not store the input* in the IODF, even if the input data set is free of errors. Only the new processor and/or operating system definitions that you defined are stored.

     The validate mode provides detailed messages how HCD treats control units and devices that already exist in the IODF.
   - **Save** causes HCD to check the input, and if free of errors, to store the data in the IODF. If there are errors in the input data set(s), HCD informs you by a message, and depending on the severity of the error, does not write the input to the IODF.
5. Specify the migrate option:

   Complete
   Select this option if you want to add a complete processor and/or OS configuration.

   Incremental
   If the specified processor or OS configuration already contains definitions, you can add and replace existing objects with the new information defined in the input data sets. Select this option for this partial migration on the dialog from Figure 244 on page 246. Refer to "Updating parts of a configuration by migrating input data sets" on page 273 for more information about the partial migration.

   PCHIDs
   The migration task also allows updating the PCHIDs of a processor configuration in a validated work IODF with an IOCP input data set that has been generated by the CHPID Mapping Tool. HCD checks that the tokens in the IODF and in the IOCP input data set are matching. For more information on this process, see "How to interact with the CHPID Mapping Tool" on page 189.
6. If the CBDZPARS macro, which contains the migration parsing macros, is not in SYS1.MACLIB, specify the name of the library that contains it. If the library is not cataloged, specify the volume serial number.

After the input has been accepted, HCD issues a message informing you that the migration of input data sets is in process.

Step 3: Analyze errors and correct the input data

During the migration process, HCD first invokes the assembler that parses the input statements. If it detects an error, migration is terminated.

- HCD writes a message to the terminal indicating that migration completed with return code RC=12.
- HCD writes a message to the HCD message list indicating that the assembler completed with a return code other than zero.
- The assembler writes information to the assembly listing that describes the problem in more detail.

If the assembler does not detect any errors, HCD runs a validation check. If it detects an error, HCD writes:

- a message to the terminal indicating that migration completed with a return code higher than 4
- error messages to the HCD message list describing the validation problem.

If the return code is 0 or 4, the IODF is updated and saved (if you specified to save the data). It is, however, recommended that you review the message log. HCD may have made assumptions that are contrary to your configuration requirements. Your actions:

1. Review the message list. For explanations and examples refer to "Resolving migration errors" on page 283.
2. Edit and correct the IOCP, MVSCP, and HCPRIO input data sets.
3. Migrate your input data sets again.

Step 4: Update configuration data

If the protocol or the attached devices specified in the IOCP input data set do not match the supported control unit model, HCD may change the model definitions.

If HCD changes definitions, you are informed by messages. Review the messages, and follow the recommendation provided in the individual message.

If the type/model designated by HCD does not match the real type/model of the control unit, use the HCD dialog to specify the correct type/model.

Also, if this control unit is to be shared with another processor, update the IOCP input data set that is to be migrated accordingly.

Note: The configuration stored in an IODF may not match the IOCP/MVSCP or HCPRIO input. If discrepancies occur, you can make corrections by using the dialog.

The following note only applies if you do not use the extended migration function as described in "Changing I/O configurations by editing data sets" on page 249.

For coupling facility migration: After the IOCP input has been accepted, HCD issues messages informing you that the CF control unit and CF device definitions of the IOCP input data set were ignored.

Migrating input data sets using the batch utility

The following steps explain how to migrate your input data sets using the HCD batch utility instead of the HCD dialog. The batch utility is an easy way to migrate your input data sets if you are not familiar with the dialog yet. You have to use it for migrating your input data sets from MVS/XA SP 2.n or MVS/ESA SP 3.n.

Step 1: Create the work IODF

If an IODF does not yet exist, you first have to create a work IODF into which you want to migrate your MVSCP, IOCP, or HCPRIO data sets. Refer to "Initialize IODF" on page 291 on how to create and initialize an IODF.

Step 2: Migrate input data set

The HCD utility function for migration allows you to migrate the content of MVSCP, IOCP, and HCPRIO input data sets and to store the definitions into an IODF. For a detailed description of the utility function for migration, refer to "Migrate I/O configuration statements" on page 292.

Step 3: Analyze errors and correct the input data

During the migration process, HCD first invokes the assembler that parses the input statements. If it detects an error, the migration process is terminated.

- HCD writes a message to the data set allocated by HCDMLOG that the migration completed with return code RC=12.
- HCD writes a message to the HCD migration log (HCDPRINT) indicating that the assembler completed with a return code other than zero.
- The assembler writes information to the assembly listing (HCDASMP) that describes the problem in more detail.

If the assembler does not detect any errors, HCD runs a validation check. If it detects an error:

- HCD writes a message to the data set allocated by HCDMLOG that the migration completed with return code higher than 4.
- HCD writes error messages to the HCD migration log (HCDPRINT) describing the validation problem.

If the return code is 0 or 4, the IODF is updated. It is, however, recommended that you review the migration log. HCD may have made assumptions that are contrary to your configuration requirements. Your actions:

1. Review the migration log. For explanations and examples refer to "Errors detected during validation process" on page 285.
2. Edit and correct the IOCP, MVSCP, and HCPRIO input data sets.
3. Migrate your input data sets again.

Step 4: Build production IODF

Before you can use the IODF to IPL your operating system you have to convert the work IODF into a production IODF. Refer to "Build a Production IODF" on page 295 for an example on how to build a production IODF using the work IODF.

Changing I/O configurations by editing data sets

With HCD, the extended migration function and the possibilities for writing and migrating configurations allow users to define or change configuration definitions without using the HCD dialog.

Using I/O configuration statements with IOCP/MVSCP syntax, you can also define all configuration objects with their attributes and their connections. Type these statements into a data set as input to the migrate function. For example, a switch together with its ports can be defined via this method.

It is also possible to recreate data sets containing I/O configuration statements for the processor, operating system and switch configurations from an IODF.

However, for some tasks, such as deleting certain configuration objects, it is necessary or easier to make the configuration changes directly in the HCD dialog. For more details on the capabilities of the migration function refer to Table 20 on page 273.

Processor configurations

The migrate IOCP function allows you to specify parameters, additional to IOCP, in the input data set. Analogously, when building an IOCP input data set from the IODF, information is generated which describes the additional parameters of the configuration objects. Processor configuration data sets can be built using the Build IOCP Input Data Set function or the CONFIG PR batch utility. For details, refer to "Build an IOCP input data set" on page 185 and to "Build I/O configuration data" on page 301.

For a description of the complete and valid syntax rules for all IOCP keywords and parameters, refer to the *IOCP User's Guide* for your processor.

Operating system configurations

The migrate MVSCP function allows you to specify all configuration data of an OS configuration, for example the device preference values for esoterics or the user parameters for devices. Also, it is possible to generate an OS configuration data set from the IODF using the Build OS Configuration Data Set dialog or the CONFIG OS batch utility. For details, refer to "Build I/O configuration data" on page 192 and to "Build I/O configuration data" on page 301.

Switch configurations and switch-to-switch connections
It is possible to migrate switch definitions with all ports, switch-to-switch connections and all switch configurations from a data set. Analogously, it is possible to build such a data set from the IODF using the CONFIG SW batch utility. For details, refer to "Build I/O configuration data" on page 301.

Important Note:

It may not be possible to remigrate an IOCP input data set generated by HCD back into the IODF. The reasons are:

- HCD uses the High Level Assembler program for parsing the IOCP statements. The High Level Assembler earlier than V1.5 is restricted to 255 characters for any keyword value. IOCP statements, however, may contain keywords with a value greater than 255 characters. High Level Assembler V1.5 removes this restriction.
- HCD keeps additional data for a processor configuration that is not contained in an IOCP input data set. This data may be used for validation and, therefore, missing at the migrate step leading to validation errors. For example, the partition usage is defaulted to CF/OS. For a shared CF peer channel, this may lead to a validation error, because only a CF partition may be specified in the access or candidate list.
- Since the IOCP data are only a subset of the processor configuration data, you may lose this additional configuration data if you update a processor configuration from an IOCP input data set.
- IOCP data sets do not contain devices connected to a processor with a null device candidate list because of IOCP rules. If the device is connected to another processor with the same control unit, this is an ambiguous configuration and is not migrated.

For updating the IODF via I/O control statements, it is recommended to use the extended I/O configuration statements of HCD instead of an IOCP input data set (see "IOCP input data sets using extended migration" on page 187).

Additional parameters and statements

In the following, the configuration objects and their attributes you can define via I/O control statements and migrate into HCD are described. For a detailed description of the IOCP keywords and parameters, refer to the *IOCP User's Guide* for your processor.

Configuration object	Attributes
Operating system	ID Name Type Description D/R site OS configuration
NIP console	Device number
EDT	ID Preference value Description
Esoteric	Name Device numbers Token VIO indication
Generic	Name Preference value VIO indication

Configuration object	Attributes
Switch	ID Unit Model Description Serial number Installed ports Chained switch connection
Port	Address Name Occupied indication
Switch configuration	ID Switch ID Description Default dynamic connection
Port configuration	ID Allowed dynamic connections Prohibited dynamic connections Dedicated connection Blocked indication
Processor	ID Unit Model Support level Configuration mode SNA address Serial number Description
Channel Subsystem	ID Description Maximum number of devices
Partition	Name Number Usage Description
UUID	Uniqueness of PCIe User Defined Identifier
PCIe function	ID Unit Type PCHID CHID (PCHID,VCHID) Description PNET IDs Partition access list Partition candidate list

Configuration object	Attributes
UUID	Uniqueness of PCIe User Defined Identifier
Channel path	ID Type Operation mode Adapter details (PCHID, VCHID, HCA and port, PCHID and port) PNET IDs Partition access list Partition candidate list Channel parameter I/O cluster Dynamic switch Description Coupling facility (CF) connection information Entry switch/port connected to a channel path
Control unit	Number Unit Model Serial number Switch/port connected to a control unit Description Connected channel paths/link addresses Unit address ranges I/O concurrency level Protocol Logical address
Device	Number Unit Model Serial number Volume serial number Connected control units Description Unit address Preferred channel path TIMEOUT indication Status detection indication OS parameters/features Subchannel set ID

Operating system

An operating system is specified with the IOCONFIG statement. It contains the following parameters:

ID

Specifies the numerical identifier of the OS (mandatory).

This keyword is maintained for compatibility with the MVSCP syntax.

NAME

Specifies the OS configuration ID. This is required only, if the migration is performed using the wildcard * in the parameter string of the batch utility. Otherwise, it is ignored and the OS configuration ID is taken from the invocation parameters.

TYPE
Specifies the OS configuration type. This is required only, if the migration is performed using the wildcard * in the parameter string of the batch utility. Otherwise, it is ignored and the OS configuration type is taken from the invocation parameters.

DESC
Specifies a description of the operating system (optional). The description of the OS configuration is added or updated.

DROSID
Specifies the alphanumerical identifier of the D/R site OS configuration (optional).

Table 5. Operating System Syntax

Syntax:	
`ID=id`	2 alphanumeric characters
`NAME=os_name`	up to 8 alphanumeric characters
`TYPE=type`	MVS or VM
`DESC='description'`	up to 32 characters
`DROSID=os_name`	up to 8 alphanumeric characters

Example

The following example defines an OS configuration named NEWOS01B of type MVS together with the given description.

```
IOCONFIG ID=01,NAME=NEWOS01B,DESC='LPAR system',TYPE=MVS,DROSID=NEWOSDR1
```

NIP consoles

A NIP console is specified with the NIPCON statement. It contains the DEVNUM keyword.

DEVNUM
Specifies a list of device numbers to be used as NIP consoles (mandatory). All devices specified must be defined in your configuration.

NIP tries to use the devices in the order they are listed (left-to-right).

Table 6. NIP consoles Syntax

Syntax:	
`DEVNUM=(device_number[,device_number]…)`	list of device numbers

Example

In the example the devices with numbers 102E and 102F are assigned to be used as consoles. NIP will try device 102E first.

```
NIPCON DEVNUM=(102E,102F)
```

EDT

An Eligible Device Table is specified with the EDT statement.

Note: If you want to define only one EDT, place the EDT statement ahead of all UNITNAME statements (see “Esoteric” on page 254 and “Generic” on page 255). If multiple EDT statements are written, each statement must precede the UNITNAME statements defining the corresponding EDT.

The EDT statement contains the following parameters:

ID
Specifies the identifier of the EDT. The default is the ID specified on the IOCONFIG statement. If multiple EDT statements are written, the ID parameter is mandatory for all but one statement.

DEVPREF
Specifies a list of devices in the order of preference (optional).

This parameter conforms to legacy syntax but is still supported. However, it is recommended to use the DEVPREF parameter with the UNITNAME statement, see “Generic” on page 255, instead.

DESC
Specifies a description of the EDT (optional).

Table 7. EDT Syntax

Syntax:	
`ID=id`	2 hexadecimal characters
`DEVPREF=(generic_name[,generic_name]…)`	list of generic device types, generates the preference value of generics according to the list position
`DESC='description'`	up to 32 characters

Example

The following example defines EDT 01 with the given description.

```
EDT ID=01,DESC='Eligible Device Table 1'
```

Esoteric

An esoteric is specified with the UNITNAME statement. For use with esoterics it contains the following parameters:

NAME
Specifies the name of the esoteric (mandatory).

Note: Do not use esoteric names SYSALLDA, SYS3480R, or SYS348XR.

UNIT
Specifies a sequence of consecutive device numbers (optional). The numbers specified must be defined in the configuration.

TOKEN
Allows controlling the order of esoterics in the EDT (optional). Only relevant if you have data sets that are cataloged using esoterics.

Tokens prevent the order of esoterics from becoming alphabetical after IPL, thus avoiding access problems for data sets that are cataloged using esoterics.

If a token is specified for one esoteric you must also specify tokens for all other esoterics.

VIO
States whether or not the devices are eligible for VIO. May only be set to YES if the esoteric contains at least one DASD device type (optional).

Table 8. Esoteric Syntax

Syntax:	
`NAME=esoteric_name`	8 alphanumeric characters
`UNIT=((devnum,n)[,(devnum,n)]…)`	four hexadecimal characters followed by a decimal number
`TOKEN=token`	number in the range 1 to 8999
`VIO=value`	YES or NO

Example

The following example assigns eight device numbers 01D1 through 01D8 and the token value to esoteric device group ES002. The group is not eligible for VIO.

```
UNITNAME NAME=ES002,                        *
         UNIT=((01D1,8)),                   *
         TOKEN=2015,                        *
         VIO=NO
```

Generic

A generic is specified with the UNITNAME statement. For use with generics it contains the following parameters:

NAME
Specifies the name of the generic (mandatory; must be a valid generic name).

VIO
Specifies whether or not the devices are eligible for VIO (optional). VIO=YES may only be specified if the generic name specifies a DASD device type.

DEVPREF
Allocates a position in a preference order of generics (optional).

For default values see the information on MVS devices within the "Supported hardware report" on page 358. This parameter value must be unique for the OS configuration.

Table 9. Generic Syntax

Syntax:	
`NAME=generic_name`	eight alphanumeric characters
`VIO=value`	YES or NO
`DEVPREF=pref_value`	decimal number between 1 and 99999

Example

The following example defines the generic device group 3390 with the preference value 150. The devices are eligible for VIO.

```
UNITNAME NAME=3390,                      *
         VIO=YES,                        *
         DEVPREF=150
```

Switch

A switch is specified with the SWITCH statement. It contains the following parameters:

SWID
Specifies an identifier for the switch (mandatory).

UNIT
Specifies the switch unit (mandatory).

MODEL
Specifies the switch model (optional).

DESC
Specifies a description of the switch (optional).

SERIAL
Specifies a serial number (optional).

PORT
Specifies the installed ports (default from UIM, optional).

Specify only ports that are supported by the switch type. At least the minimum installed port range is set to installed. If the switch already exists with an installed port range that differs from the specified installed port range(s), only the new specified ports are set to installed if possible. That means, any existing installed port that does not hold a connection to a channel path or control unit is set to not installed if not specified with the PORT parameter.

SWPORT
Specifies the chained switch connections (optional). If operand exceeds 255 characters, repeat the SWITCH statement with the remaining values.

If the switch already exists, all existing connections to other switches are broken. The connections to other switches are established as specified by the SWPORT parameter.

ADDRESS
Specifies the switch address for a FICON switch (optional).

The corresponding switch control unit and device are specified by corresponding CNTLUNIT and IODEVICE statements.

Table 10. Switch Syntax

Syntax:	
`SWID=id`	2 hexadecimal characters
`UNIT=switch_unit`	like CU type
`MODEL=switch_model`	like CU model
`DESC='description'`	up to 32 characters
`SERIAL=serial_no`	up to 10 characters
`PORT=((low_port_id,high_port_id),…)`	up to 32 port ranges
`SWPORT=((from_port,to_switch,to_port),…)`	up to 32 switch-to-switch connections
`ADDRESS=switch_address`	2 hexadecimal characters (domain ID); for FICON switches only

Example

In the following example, switch 20 with an installed port range 00 to FF is connected to port D1 of switch 01 via port C0.

```
SWITCH SWID=20,UNIT=2032,                                          *
               PORT=((00,FF)),                                     *
               DESC='FICON switch, installed 10/09/11',            *
               SERIAL=55-8888,                                     *
               SWPORT=((C0,01,D1))                                   *
               ADDRESS=02
```

Note: Put the serial numbers in quotes, if you use characters such as blanks or commas as part of your serial numbers.

Port

A switch port is specified with the PORT statement. It contains the following keywords:

ID
Port address identifying the port (mandatory).

NAME
Specifies a port name (optional).

The port name must not include commas, asterisks, or blanks. It must not contain X'FF' or any extended binary-coded decimal interchange code (EBCDIC) character less than X'40'. It must also not begin with a left parenthesis and end with a right parenthesis.

OCC
Indicates that the port is connected to a processor, switch, or control unit (optional).

Table 11. Port Syntax

Syntax:	
`ID=port_id`	2 hexadecimal characters
`NAME='portname'`	up to 24 characters
`OCC`	no value assigned

Example

In the following example port D5 is named *connected_to_CU_7230* and indicated as occupied.

```
PORT ID=D5,                                  *
     NAME='connected_to_CU_7230',            *
     OCC
```

Switch configuration

A switch configuration is specified with the SWCONF statement. It contains the following parameters:

ID
Specifies the switch configuration ID (mandatory).

SWID
Identifies the switch owning the configuration (mandatory).

DESC
Specifies a description of the switch configuration (optional).

DEFCONN
Specifies whether the default port connections are set to allowed or prohibited (mandatory).

Table 12. Switch Configuration Syntax

Syntax:	
`ID=switch_configuration_id`	8 characters
`SWID=switch_id`	2 hexadecimal characters
`DESC='description'`	up to 32 characters
`DEFCONN=dynamic_default_connection`	A (allowed) or P (prohibited)

Example

In the following example the default connection for switch configuration BASECONF of switch 01 is set to allowed.

```
SWCONF ID=BASECONF,                                *
       SWID=01,                                    *
       DESC='basic configuration',                 *
       DEFCONN=A
```

Port configuration

A port configuration is specified with the POCONF statement.

The POCONF statement is an optional extension to the switch configuration. With POCONF, port connections are defined explicitly and existing defaults are overridden. The statement may be a maximum of 255 characters long. To express longer statements the POCONF may be repeated. POCONF includes the following parameters:

ID
Port address identifying the port (mandatory).

PORTCF
Specifies the type of connections to target ports (mandatory).

A
sets the dynamic connection to the succeeding list of target port IDs to allowed

P
sets the dynamic connection to the succeeding list of target port IDs to prohibited

D
sets a dedicated connection to the succeeding target port ID

BLOCKED
blocks the port.

Table 13. Port Configuration Syntax

Syntax:	
`ID=port_id`	2 hexadecimal characters

Table 13. Port Configuration Syntax (continued)

Syntax:	

`PORTCF=([A,(id1,...,idn),]`
`[P,(id2,...,idm),]`
`[D,(id),]`
`[BLOCKED])`
	One or more of the following specifications:
	list of ports in installed range, dyn. connection allowed
	list of ports in installed range, dyn. connection prohibited
	port with dedicated connection
	BLOCKED attribute

Example

In the following example, port D2 has allowed dynamic connections to ports B1 and B3, and prohibited dynamic connections to B5 and B7. Port D4 has a dedicated connection to port C0.

```
POCONF ID=D2,                                          *
       PORTCF=(A,(B1,B3),P,(B5,B7))
POCONF ID=D4,                                          *
       PORTCF=(D,(C0))
```

Processor

A processor is specified with the ID statement. If specified, it must precede all other statements in the configuration data set. It contains the following keywords:

NAME
Specifies the processor ID. If the ID does not exist, it is created (1).

MSG1
Specifies the identification information that is printed on the ID1 line of the heading in IOCP configuration reports (optional). Only supported for compatibility with IOCP.

MSG2
Specifies the identification information that is printed on the ID2 line of the heading in IOCP configuration reports (optional). Only supported for compatibility with IOCP.

SYSTEM
Specifies the machine limits and rules that IOCP will enforce for a deck verification. The system parameter includes a specification of the processor machine type number and, optionally, a machine limits number (optional). Only supported for compatibility with IOCP.

LSYSTEM
Specifies the system name (CPC designator) of the local system; that is the system which uses this IOCDS.

UNIT
Specifies the processor unit (1).

MODEL
Specifies the processor model (1).

LEVEL
Specifies the processor support level (1). For further information on support levels refer to 'support_level_ID'.

SNAADDR
Specifies the SNA address (network name, system name) for a processor in a processor cluster (optional).

MODE
Specifies the processor configuration mode as LPAR or BASIC (1).

SERIAL
Specifies the processor serial number (optional).

DESC
Specifies a description for the processor (optional).

Note (1): UNIT, MODEL and LEVEL are processed only if the migration is performed using the wildcard * in the parameter string of the batch utility.

Table 14. Processor Syntax

Syntax:	
`NAME=processor_id`	8 characters
`MSG1='message'`	up to 64 characters; first 8 characters are taken as IOCDS name
`MSG2='message'`	up to 64 characters
`SYSTEM=(processor_unit[,limits_number]`	4 characters followed by a decimal number
`LSYSTEM=local_cpc_designator`	8 characters
`UNIT=processor_unit`	8 characters
`MODEL=processor_model`	4 characters
`LEVEL=support_level`	8 characters
`SNAADDR=(network_name,system_name)`	list of 2 entries, each up to 8 characters
`MODE=processor_mode`	BASIC or LPAR
`SERIAL=serial_number`	up to 10 characters
`DESC='description'`	up to 32 characters

Example

In the following example processor PROC01 of type 2094, model S28 is defined with the serial number 0518712094, in LPAR mode, support level H050331.

```
ID NAME=PROC01,UNIT=2094,MODEL=S28,                          *
      DESC='XMP, Basic 2094 support',SERIAL=0518712094,      *
      MODE=LPAR,LEVEL=H050331
```

Channel subsystem and partition

Depending on whether you use the RESOURCE statement for XMP processors or SMP processors, it specifies the channel subsystems, the logical partitions (names and numbers) and groups the logical partitions to the channel subsystems. It contains the following keywords:

PART or PARTITION
Specifies a list of partition names with an optional addition of the corresponding partition numbers (mandatory).

DESCL
Specifies a list containing descriptions for the defined partitions (optional).

USAGE
Specifies a list describing the partition usage type for each partition.

MAXDEV
Is only allowed for XMP processors and specifies for each channel subsystem the maximum number of devices, including those defined in the IOCDS, to be allowed using dynamic I/O. For z9 EC processors and later models, it specifies the maximum number of devices in each subchannel set.

When migrating an IOCP deck for new processor types (requiring a maximal HSA definition): HCD ignores the MAXDEV parameter of the RESOURCE statement in the deck and sets the maximum number of devices to the predefined maximum for the processor type.

When migrating for old processor types (not requiring maximal HSA definition): Complete migration behaves as previously described. Incremental migration sets the maximum number of devices as specified in the deck. If 0 (zero) is specified in the deck, incremental migration leaves the existing value unchanged.

CSSDESCL
specifies a list of channel subsystem descriptions, one list entry for each channel subsystem listed in the MAXDEV keyword.

Note: If the partition type is missing, it is set automatically depending on which types of channel paths are assigned to the partition and the capability of the processor.

Table 15. Channel subsystem and partition Syntax

Syntax:	
For XMP processors: PART[ITION]= ((CSS(0),(lpname[,lpnumber])[,(lpname[,lpnumber])...]) ... [,(CSS(n),(lpname[,lpnumber])[,(lpname[,lpnumber])...])]) ***For SMP processors:*** PART[ITION]= ((lpname[,lpnumber])[,(lpname[,lpnumber])...])	lpname: up to 8 alphanumeric characters for the LPAR name; an * is accepted as lpname to indicate a reserved partition; lpnumber: 1 hexadecimal character for the LPAR number. The CSS(n) parameter(s) must be used for XMP processors and must not be used for SMP processors.
DESCL=('descp1_css0','descp2_css0',…, 'descp1_css1','descp2_css1',…, … 'descp1_cssn','descp2_cssn',…)	description for all partitions in the processor complex, up to 32 characters per description
CSSDESCL=('desc_css0','desc_css1',…)	description syntax of channel subsystems for XMP processors
USAGE=(usage1_css0,usage2_css0,…, usage1_css1,usage2_css1,…, … usage1_cssn,usage2_cssn,…)	usage of each partition in the processor complex (CF, OS, or CF/OS)
MAXDEV=((CSS(0),maxnum1[,maxnum2, maxnum3]),…, (CSS(n),maxnum1[,maxnum2, maxnum3]))	maximum number of devices for each channel subsystem in each subchannel set

Example

In the following example, the processor contains three channel subsystems with three partitions in each. Channel subsystem CSS(2) contains two subchannel sets. This is indicated by the MAXDEV statement containing two maximum numbers of devices (35 and 20).

```
RESOURCE PART=((CSS(0),(LP01,1),(LP02,2),(LP03,3)),               *
               (CSS(1),(LP11,1),(LP12,2),(LP13,3)),               *
               (CSS(2),(LP21,1),(LP22,2),(LP23,3))),              *
         DESCL=('LPAR1_of_CSS0','LPAR2_of_CSS0','LPAR3_of_CSS0',  *
                'LPAR1_of_CSS1','LPAR2_of_CSS1','LPAR3_of_CSS1',  *
                'LPAR1_of_CSS2','LPAR2_of_CSS2','LPAR3_of_CSS2'), *
         USAGE=(CF/OS,OS,CF,CF/OS,OS,CF,CF/OS,OS,CF),             *
         MAXDEV=((CSS(0),63),(CSS(1),50),(CSS(2),35,20)),         *
         CSSDESCL=('first CSS(0)','second CSS(1)','third CSS(2)')
```

For HCD, it is also possible to specify a separate RESOURCE statement for each channel subsystem. This may be required if you do not use a High Level Assembler V1.5 or later. You can split the previous RESOURCE example for an XMP processor into the following parts:

```
RESOURCE PART=((CSS(0),(LP01,1),(LP02,2),(LP03,3))),               *
         DESCL=('LPAR1_of_CSS0','LPAR2_of_CSS0','LPAR3_of_CSS0'),  *
         USAGE=(CF/OS,OS,CF),                                      *
         MAXDEV=(CSS(0),63),                                       *
         CSSDESCL=('first CSS(0)')
RESOURCE PART=((CSS(1),(LP11,1),(LP12,2),(LP13,3))),               *
         DESCL=('LPAR1_of_CSS1','LPAR2_of_CSS1','LPAR3_of_CSS1'),  *
         USAGE=(CF/OS,OS,CF),                                      *
         MAXDEV=(CSS(1),50),                                       *
         CSSDESCL=('second CSS(1)')
RESOURCE PART=((CSS(2),(LP21,1),(LP22,2),(LP23,3))),               *
         DESCL=('LPAR1_of_CSS2','LPAR2_of_CSS2','LPAR3_of_CSS2'),  *
         USAGE=(CF/OS,OS,CF),                                      *
         MAXDEV=(CSS(2),35,20),                                    *
         CSSDESCL=('third CSS(2)')
```

PCIe function

A PCIe function is specified with the FUNCTION statement.

The FUNCTION statement contains the following keywords:

FID
Identifies the PCIe function within the processor configuration (mandatory).

TYPE
Identifies the PCIe function type (optional - defaults to ROCE).

UNIT
Identifies the PCIe function type (optional - support for backward compatibility).

PCHID
Identifies the PCIe adapter card which provides the specified function by specifying the slot of the card in the I/O drawer.

PORT
Identifies the port on the PCIe adapter (optional).

VCHID
Identifies a virtual PCIe adapter (exclusive to the PCHID keyword)

VF
Identifies the PCIe virtual function number (optional).

PNETID
Identifies the physical network IDs.

PART
Specifies the access and candidate lists of partitions entitled to use the PCIe function.

DESC
Specifies a description of the PCIe function (optional).

UID
Specifies a user defined identifier.

Table 16. PCIe Function Syntax

Syntax:	
`FID=xxxx`	four hexadecimal characters
`TYPE=type`	valid PCIe function type
`UNIT=type`	PCIe function type (use to be backward compatible).
`PCHID=xxx`	three hexadecimal characters for physical channel id
`PORT=x`	one decimal digit
`VCHID=xxx`	three hexadecimal characters for virtual channel id
`VF=nnn`	up to three decimal digits
`PNETID=(pnetid1,…,pnetid4)`	up to four 16-character alphanumeric physical network IDs
`PART=(acc_lp1 [,(cand_lp1[,…,cand_lpn])])`	access list (limited to one partition) and optional candidate list of partitions connected to the PCIe function
`DESC='PCIe function description'`	up to 32 characters
`UID=xxxx`	up to four hexadecimal digits

Example

The following examples define a PCIe function of type ROCE.

```
FUNCTION FID=020,VF=31,PART=((LP01),(LP21,LP22,LP23,LP24)), *
      TYPE=ROCE,DESC='max VF and 2 pnetid,a=lp01',          *
      PNETID=(PNETID1,ID2,,),PCHID=4FE
```

The following example defines a PCIe function of type ISM with UID ABCD.

```
FUNCTION FID=0002,VF=7,PART=((LP01),(=)),TYPE=ISM,            *
      PNETID=PNETID2,VCHID=7C0,UID=ABCD
```

Channel path

A channel path is specified with the CHPID statement. For an XMP processor, a spanned CHPID is defined for one or more channel subsystems. Therefore, the CHPID statement must contain the appropriate channel subsystem ID(s). If only one CSS is defined, it is not required to specify its ID on the PATH keyword.

The CHPID statement contains the following keywords:

PATH
Specifies the CHPID number and, if required, the CSS IDs of the channel path (mandatory).

PNETID
Identifies the physical networks to which the channel path is assigned (optional, only for channel paths of type IQD or OSD).

TYPE
Specifies the channel path type of I/O operation for the channel path (mandatory).

SHARED
Specifies that the channel path on the CHPID statement is shared (optional).

REC
Specifies that the channel path on the CHPID statement is reconfigurable (optional).

PART, PARTITION, or NOTPART
PART and PARTITION specify the access list of logical partitions that will have the channel path configured online after POR, and the candidate list identifying the logical partitions which can access the device.

NOTPART specifies the access list of logical partitions that will not have the channel path configured online after POR, and the list of logical partitions which cannot access the device.

REC
REC in the PART or PARTITION keyword allows the channel path to be dynamically moved between partitions after POR.

CHPARM, OS
Specifies channel path data that is used by the operating system. Examples:

- CHPARM=00 is the default.
- CHPARM=01 indicates that the channel path is managed by DCM.
- CHPARM=02 indicates
  - for IQD channels: channel can access the IEDN (IQDX function)
  - for OSD, OSM, and OSX channels: priority queuing is disabled.

    For OSM channel paths, device priority queuing needs to be disabled. Therefore, for these CHPIDs, HCD converts a CHPARM=00 (default with priority queuing enabled) to CHPARM=02.
- CHPARM=40 indicates that the maximum frame size for an IQD channel is 24K.

For more information about the CHPARM parameter, refer to the *IOCP User's Guide* for your processor.

I/O CLUSTER
Specifies an I/O cluster name. An I/O cluster is a sysplex that owns a managed channel path for an LPAR processor configuration.

SWITCH
Specifies a number for a switch which is used as a dynamic switch for all paths from the channel path (CHPID) to the connected control units (required for dynamic connections through a switch).

DESC
Specifies a description of the channel path (optional).

TPATH
Specifies a connected CF channel path (optional).

The TPATH parameter can be specified for a CF channel path, either CF receiver, CF sender, or CF peer channel path.

For a CF sender or CF receiver channel path, the TPATH parameter must contain:

- the target processor
- the target CSS ID for XMP processors
- the target channel path ID

- when specified with a CF sender channel path ID, the TPATH parameter must also contain the CF sender control unit and device numbers used for the CF connection (optional for a CF receiver channel paths)

For a CF peer channel path, the TPATH parameter contains the following items for the target and source channel paths of the CF connection:

- the target/source processor
- the target/source CSS ID for XMP processors
- the target/source channel path ID
- control unit number (only if this is a sending CF channel, that is, the channel path connects to a target CF logical partition)
- starting device number (only if this is a sending CF channel)

A CF connection uses two (CF sender channel) or seven (sending CF peer channel) devices. Only the starting one can be specified (with four digits). The remaining devices are automatically assigned to the next consecutive device numbers.

Any CF control units and CF devices specified via CNTLUNIT and IODEVICE statements are ignored.

The connection can only be established if the target channel path exists. If the target channel path is already connected, the existing connection is broken and a new connection is established.

SWPORT
Specifies an entry switch port (optional).

PCHID
Specifies a physical channel identifier (optional).

VCHID
Specifies a virtual channel identifier (optional). Used for internal channel path - exclusiv to the PCHID keyword.

AID
Specifies the ID of the host communication adapter (HCA) on which the channel is defined.

PORT
Specifies the port on the HCA or PCHID on which the channel is defined.

MIXTYPE
Specifies that the channel path resides on an adapter card with a mixture of FC and FCP channel paths. HCD ignores this keyword during migration. For details on when it is allowed/required by IOCP, see the IOCP User's Guide.

Table 17. Channel Path Syntax

Syntax:	
`PATH=[(CSS(n,…),]chpid_number[)]`	2 hexadecimal characters for the CHPID, and a decimal number for the CSS ID(s)
`PNETID=(pnetid1,…,pnetid4)`	up to four 16-character alphanumeric physical network ID names
`TYPE=type`	valid channel path type
`SHARED`	no value assigned
`REC`	no value assigned

Table 17. Channel Path Syntax (continued)

Syntax:	
For XMP processors: PART[ITION]=((CSS(0),(acc_lp1,...,acc_lpn) [,(cand_lp1,...,cand_lp2)] [,REC]) ... [(CSS(n),(acc_lp1,...,acc_lpn) [,(cand_lp1,...,cand_lp2)] [,REC])]) ***For SMP processors:*** PART[ITION]=((acc_lp1,...,acc_lpn) [,(cand_lp1,...,cand_lp2)][,REC])	access list and optional candidate list of partitions; optional addition of REC; for XMP processors: CSS ID is required
For XMP processors: NOTPART=((CSS(0),(acc_lp1,...,acc_lpn) [,(cand_lp1,...,cand_lp2)]) ... [(CSS(n),(acc_lp1,...,acc_lpn) [,(cand_lp1,...,cand_lp2)])]) ***For SMP processors:*** NOTPART=((acc_lp1,...,acc_lpn) [,(cand_lp1,...,cand_lp2)])	up to 2 lists of partitions
OS=xx, CHPARM=xx	2 hex character OS parameter
IOCLUSTER=sysplex	8 character sysplex name for managed CHPID
SWITCH=xx	2 hexadecimal characters
DESC='description'	up to 32 characters
TPATH=(proc,chpid[,CFS CU,CFS device]) (for legacy CF channel path only)	target CHPID for connected CHPID pairs (CF connection): 8 character processor name 2 hex character CHPID 4 hex character CU number 4 hex character device number
TPATH=((proc,chpid[,CFP CU,CFP device]), (proc,chpid[,CFP CU,CFP device])) (for CF peer channel path only)	pair of target and source CHPIDs (CF peer connection): 8 character processor name 2 hex character CHPID 4 hex character CU number 4 hex character device number
TPATH=((CSS(n),proc,chpid[,cu,device] [,device count]),…)	8 character processor name 2 hex character CHPID 4 hex character CU number 4 hex character device number decimal device count

Table 17. Channel Path Syntax (continued)

Syntax:	
`SWPORT=((swid,port))`	switch and port to which the CHPID connects
`PCHID=xxx`	three hexadecimal characters for the physical channel ID
`VCHID=xxx`	three hexadecimal characters for the virtual channel ID
`AID=xx`	two hexadecimal characters
`PORT=n`	one numeric character
MIXTYPE	no value assigned

Examples for a XMP processors

In the following example, the spanned channel path 33 of type IQD is shared by partitions from channel subsystems 0 and 1.

```
CHPID PATH=(CSS(0,1),33),                *
      TYPE=IQD,                          *
      PART=((CSS(0),(LP01,LP02)),        *
            (CSS(1),(LP11,LP12)))
```

Control unit

A control unit is specified with the CNTLUNIT statement. It contains the following keywords:

CUNUMBR
Specifies a number assigned to the control unit (mandatory). The number assigned to each control unit must be unique within an IODF.

UNIT
Specifies the type of control unit (mandatory).

SERIAL
Specifies a serial number (optional).

SWPORT
Specifies switch ports to which the control unit is connected (optional). If operand exceeds 255 characters, repeat the CNTLUNIT statement with the remaining values.

DESC
Specifies a description of the control unit (optional).

PATH
For each channel subsystem, this keyword specifies the channel paths attached to the control unit (mandatory). For control units that are not connected to a processor, specify PATH=** or PATH=(**).

LINK
For each channel subsystem, this keyword specifies the link address to which the control unit is attached (optional).

The order in which the link addresses are specified corresponds to the order in which the channel paths are specified in the PATH keyword.

UNITADD
Specifies the unit address ranges that are recognized by the control unit (mandatory).

CUADD
Specifies the logical address for the control unit (optional).

SHARED
Specifies the level of concurrency of I/O requests that the parallel channel path allows for the control unit (optional).

PROTOCOL
Specifies the interface protocol that the parallel control unit uses when operating with the channel paths specified in the PATH keyword (optional).

Table 18. Control Unit Syntax

Syntax:	
`CUNUMBR=number`	4 hexadecimal characters
`UNIT=type`	valid control unit type
`SERIAL=serial_number`	up to 10 characters
`SWPORT=((swid1,port1),(swid2,port2),…)`	list of up to 32 sublists (switch ID, port ID) 2 hex character switch ID 2 hex character port ID
`DESC='description'`	up to 32 characters max.

For XMP processors:
`PATH=((CSS(0),chpid[,chpid,…])`
`[,(CSS(1),chpid[,chpid,…])]`
`…`
`[,(CSS(n),chpid[,chpid,…])])`
For SMP processors:
`PATH=(chpid[,chpid]…)`
	0,1,... for the CSS ID;
	2 hexadecimal characters for each static CHPID
	** for each managed CHPID or for control units not connected to a processor

For XMP processors:
`LINK=((CSS(0),link_addr[,link_addr,…])`
`[,(CSS(1),link_addr[,link_addr,…])]`
`…`
`[,`
`(CSS(n),link_addr[,link_addr,…])])`
For SMP processors:
`LINK=(link_addr[,link_addr]…)`
	0,1,... for the CSS ID;
	two or four hexadecimal characters for the link address of each CHPID
	'**' if not specified

`UNITADD=((address[,number]),…)`	2 hexadecimal characters for each unit address followed by a decimal number
`CUADD=address`	1 or 2 hexadecimal characters
`SHARED=value`	Y or N
`PROTOCOL=value`	D, S, or S4

Example for an XMP processor

In the following example, control unit 0780 of type 2105 is connected to channels 11 and 14 in channel subsystem 0 and to channels 21 and 24 in channel subsystem 1. All channels in both channel subsystems use link address E8. Channels from CSS 0 are connected to the control unit via switch 01, channels from CSS are connected via switch 02.

```
CNTLUNIT CUNUMBR=0780,PATH=((CSS(0),11,14),(CSS(1),21,24)),   *
      UNITADD=((00,128)),LINK=((CSS(0),E8,E8),(CSS(1),E8,E8)),*
      CUADD=F,UNIT=2105
      DESC='ESS12 780 CU F (3390-mix) VSE128'
      SWPORT=((01,E8),(02,E8))
```

Device

A device is specified with the IODEVICE statement. It contains the following keywords:

ADDRESS
Specifies the device number and how many devices are to be defined (mandatory).

UNIT
Specifies the device type (mandatory).

MODEL
Specifies the model number of the device, if available (optional).

PART, PARTITION or NOTPART
PART and PARTITION specify the candidate list identifying the logical partitions which can access the device (optional).

NOTPART specifies the logical partitions which cannot access the device (optional).

If for an XMP processors the device has access to more than one CSS, the CSS subkeyword is required to indicate to which channel subsystem the partition belongs.

SERIAL
Specifies the serial number of the device (optional).

VOLSER
Specifies the volume serial number (optional).

CUNUMBR
Specifies the number(s) of the control unit(s) the device is attached to (mandatory).

DESC
Specifies a description of the device (optional).

UNITADD
Specifies the unit address that is transmitted on the channel path to select the I/O device (optional). If not specified, the last two digits of the device number are used.

PATH
Specifies the preferred channel path (optional).

TIMEOUT
Specifies whether the I/O interface timeout function is to be active (optional).

STADET
Specifies whether the Status Verification Facility is to be enabled or disabled (optional).

SCHSET
Specifies for z9 EC processors or later models the subchannel set ID where the device is located.

PPRCUSE
Specifies the PPRC usage for DASD devices (optional).

Table 19. Device Syntax

Syntax:	
`ADDRESS=(device_number,number_of_units)`	4 hexadecimal characters followed by a decimal number in the range 1 to 4095
`UNIT=device_type`	up to 8 alphanumeric characters
`MODEL=model_number`	up to 8 alphanumeric characters

For XMP processors:
`PART[ITION]=((CSS(0),(lpname1[,lpname2,...]))`
`...`
`[,(CSS(m),0)]`
`...`
`[,(CSS(n),(lpname1[,lpname2,...]))]`
`)`
 	
For SMP processors:
`PART[ITION]=(lpname1[,lpname2,...])`
	list of partition names with up to 8 alphanumeric characters;
	0,1,... for the CSS ID;
	
	For XMP processors, a 0 is accepted as lpname to indicate a null device candidate list; that is, the control unit shared by several CSSs cannot access the device through CSS(m).

For XMP processors:
`NOTPART=((CSS(0),(lpname1[,lpname2,...]))`
`...`
`[,(CSS(m),0)]`
`...`
`[,(CSS(n),(lpname1[,lpname2,...]))]`
`)`
 	
For SMP processors:
`NOTPART=(lpname1[,lpname2,...])`
	list of partition names with up to 8 alphanumeric characters;

`SERIAL=serial_number`	up to 10 numeric characters **Note:** Put the serial numbers in quotes if you use characters such as blanks or commas.
`VOLSER=volume_serial_number`	up to 6 characters
`CUNUMBR=(number1[,number2]…)`	up to 8 hexadecimal numbers of 4 characters (or **** for unconnected devices)
`DESC='description'`	up to 32 alphanumeric characters
`UNITADD=unit_address`	2 hexadecimal characters

For XMP processors:
`PATH=((CSS(0),chpid[,chpid,…])`
`[,(CSS(1),chpid[,chpid,…])]`
`…`
`[,(CSS(n),chpid[,chpid,…])]`
`)`
 	
For SMP processors:
`PATH=(chpid[,chpid]…)`
	0,1,... for the CSS ID;
	2 hexadecimal characters for each CHPID

Table 19. Device Syntax (continued)

Syntax:	
`TIMEOUT=value`	Y or N
`STADET=value`	Y or N
`SCHSET=n` `SCHSET=((CSS(0),n),…,(CSS(m),n))`	*n* can be one of 0, 1, or 2. Use the short form SCHSET=n if the placement of the device is the same for all CSSs. SCHSET=0 is the default.
`PPRCUSE=value`	D (Duplex), F (Flashcopy), S (Simplex), U (Utility), N (Nonsysplex).
`USERPRM=((param1,value1)[,(param2,value2)]…)`	list of device specific parameter/value pairs
`FEATURES=(feature1[,feature2]…)`	list of device specific features
`ADAPTER=adapter`	up to 5 alphanumeric characters
`DYNAMIC=value`	Y or N
`LOCANY=value`	Y or N
`NUMSECT=number`	decimal number
`OFFLINE=value`	Y or N
`OWNER=value`	VTAM or OTHER
`PCU=number`	decimal value in the range 1 to 4095
`SETADDR=value`	0, 1, 2, or 3
`TCU=value`	2701, 2702, or 2703

OS parameters/features

In the following section device specific parameters and features are described. To find out which parameters, private parameters, and features are available to you for a particular device run your Supported HW Report and I/O Definition Reference. (See "Print configuration reports" on page 304 for details on how to run the report function.) Examples of a Supported HW Report and of an I/O Definition Reference are shown in "Supported hardware report" on page 358 and in "I/O Definition Reference" on page 374, respectively.

USERPRM

Allows the specification of OS private parameters.

To locate the private parameters available to you for a particular device refer to your Supported HW Report. The OS private parameters are listed in column `SUPPORTED PARAMETERS / FEATURES`,

following PRIVATE: and extending to the slash (/). For example, device 3590 listed in the sample Supported Hardware Report - MVS Devices (“Supported hardware report” on page 358) supports the private parameters LIBRARY and AUTOSWITCH.

FEATURE
If included in the device specific parameters, FEATURE allows device specific features to be assigned. The features available depend on your UIMs.

To locate the features available to you for a particular device type refer to your Supported HW Report. The features are listed in column SUPPORTED PARAMETERS / FEATURES, following the slash (/). For example, device 3590 listed in the sample Supported Hardware Report - MVS Devices (“Supported hardware report” on page 358 supports the features SHARABLE and COMPACT.

To locate all FEATURE-related information about the device (i.e., possible values, default and description) refer to the 'I/O Definition Reference' report. The report can be written using the HCD batch utility (report type Y) .

Note: Device features must be explicitly defined in I/O configuration statements. Otherwise the feature will not be defined during migration.

ADAPTER
Specifies either the terminal control or transmission adapter used to connect a telecommunications line to a transmission control unit, or the type of channel adapter that connects a communications controller to a channel path (optional).

DYNAMIC
Specifies if the device is eligible for dynamic I/O configuration (optional).

LOCANY
Specifies if UCB can reside in 31 bit storage (optional).

NUMSECT
Specifies the number of guaranteed 256-byte buffer sections in a 2840 display-control buffer allocated to a device 2250-3 (optional).

OFFLINE
Specifies if the device is considered online or offline at IPL (optional).

OWNER
Specifies the subsystem or access method using the device (optional).

PCU
Only applicable to a display device 2250-3 attached to a control unit 2840-2 (optional)

Identifies the 2840-2 control unit the 2250-3 display device is attached to. For all 2250-3 devices attached to the same control unit, the same value is specified.

If coded, no separate IODEVICE statement UNIT=2840 must be used.

SETADDR
Specifies which of the 4 set address (SAD) commands is to be issued to the transmission control unit for operations on the line specified by the ADDRESS operand (optional).

TCU
Specifies the transmission control unit for a telecommunications line (optional).

Example for an XMP processor

In the following example, the devices numbers 7400 to 741F of type 3390A are defined together with an explicit candidate list: they can be accessed by partition TRX1 from channel subsystem 0 and from partition TRX2 from channel subsystem 1. The Status Verification Facility is enabled. The devices are placed in subchannel set 0 for channel subsystem 0 (this is the default and needs not be specified) and in subchannel set 1 for channel subsystem 1.

```
IODEVICE ADDRESS=(7400,032),UNITADD=50,CUNUMBR=(7300),        *
      STADET=Y,PARTITION=((CSS(0),TRX1),(CSS(1),TRX2)),       *
      SCHSET=((CSS(1),1)),UNIT=3390A
```

Updating parts of a configuration by migrating input data sets

The HCD incremental update function allows you to modify objects in your IODF by specifying the objects with I/O control statements in data sets, e.g. IOCP, MVSCP, or HCPRIO input data sets, and migrating these input data sets into your existing IODF.

Possible actions on objects using the incremental update

Table 20 on page 273 shows what actions you can perform on objects by using the HCD incremental update function. The meaning of the markup is as follows:

x
Action possible, you can make the change.

—
Action not possible, you cannot make the change with the batch migration utility but must use the HCD dialog.

(x)
Action possible. These attributes are deleted when the object itself is deleted.

(—)
Action not possible. These attributes cannot be deleted because the object itself cannot be deleted.

See the notes below the table for further instructions on how to add, delete, or change certain objects, their attributes and connections.

Table 20. Actions on IODF Objects

Object/Attributes	Add	Delete	Change
Processor			
ID	x	—	—
Type/model	x	(—)	—
Support level	x	(—)	—
Configuration mode	x	(—)	—
Serial number	x	—	x
Description	x	—	x
SNA address	x	—	x
Channel Subsystem			
ID	x	—	—
Maximum Number Devices	x	—	x
Description	x	x	x
Partition			
Name	x	x 1)	x 11)
Image number	x	(x)	x11)
Usage type	x 10)	(x)	x
Description	x	(x)	x
UUID			
Partition	x	(x)	x
PCIe function			
FID	x	—	—

Table 20. Actions on IODF Objects (continued)

Object/Attributes	Add	Delete	Change
VF	x	—	—
UNIT / TYPE	x	(x)	x
CHID (PCHID,VCHID,PCHID/PORT)	x	x	x
PNETID	x	x	x
Partition	x	x	x
UID	x	x	x
Description	x	x	x
Channel path			
CHPID	x	—	—
CHID (PCHID,VCHID,AID/PORT)	x	x	x 5)
PNETID	x	x	x 5)
Type	x	(—)	x 5)
Operation mode	x	(—)	x 5)
Access list	x	x	x 5)
Candidate list	x	x	x 5)
Dynamic switch	x	x	x 5)
Switch connection	x	x	x 5; 15)
CF connection	x	x	x 5)
Description	x	x	x 5)
OS parameter	x	x	x 5)
I/O cluster	x	x	x 5)
AID	x	x	x 5)
Port	x	x	x 5)
Control unit			
Number	x	x 2)	x 4)
Unit/model	x	(x)	x
Description	x	x	x
Serial number	x	x	x
Switch connection	x	x	x 15)
Channel paths	x	(x)	x
DLA	x	x	x
Logical address (CUADD)	x	x	x
Unit addresses	x	(x)	x
Protocol	x	x	x
IOCL	x	x	x
Device			

Table 20. Actions on IODF Objects (continued)

Object/Attributes	Add	Delete	Change
Number	x	x 3)	x 4)
Unit/model	x	(x)	x
Description	x	x	x
Serial number	x	x	x
Volume serial number	x	x	x
Control units	x	(x)	x
Processor connect	x	(x)	x
Unit address	x	(x)	x
Preferred CHPID	x	x	x
TIMEOUT	x	x	x
STADET	x	x	x
Candidate list	x	x	x
OS connect	x	—	x
Subchannel set	x	(x)	x
Parameters	x	x	x
Features	x	x	x
User parameters	x	x	x
PPRC usage	x	(x)	x
Operating system			
ID	x	—	—
Type	x	(—)	—
Description	x	—	x
D/R site OS	x	—	x
EDT			
ID	x	—	—
Description	x	—	x
Esoteric			
Name	x	—	—
VIO	x	(—)	x
Device list	x	x 6)	x 7)
Token	x	—	x
Generic			
VIO	x	(—)	x
Preference value	x	(—)	x
Console			
Device list	x	x 9)	x 13)

Table 20. Actions on IODF Objects (continued)

Object/Attributes	Add	Delete	Change
Order	(x)	(x)	x
Switch			
ID	x	—	—
Unit/model	x	(—)	x
Ports (installed range)	x	(—)	x 8)
Serial number	x	—	x
Description	x	—	x
Switch connection	x	x 14)	x 15)
Address	x	—	x
Ports			
ID	x	—	—
Name	x	(—)	x
Occupied indicator	x 15)	x 15)	n/a
Switch configuration			
ID	x	—	—
Description	x	—	x
Default connection	x	—	x
Port configuration			
Allowed connection	x	—	x
Prohibited connection	x	—	x
Dedicated connection	x	—	x
Blocked indicator	x	x	n/a

References to IOCP and MVSCP in the following notes refer to data sets with extended syntax as described in “Changing I/O configurations by editing data sets” on page 249.

Note:

1. To delete a partition, specify all connected channel paths (defined via access or candidate lists) together with their attached I/O units without referring to the partition and without repeating the partition in the RESOURCE statement.

   For incremental migration it is recommended to use notpart only in combination with resource statements.

   For example: IODF contains 3 LPARS (LpA,LpB and LpC) and CHPID 11 connected to LpA and LpB (nothing else). When migrating a deck with CHPID 11 and a notpart statement to LpC and part statement to LpA, following happens:

   - HCD disconnects CHPID 11 from LpA and LpB.
   - LpA and LpB will be deleted if they don't have any chpids attached and if no resource statement is given.
   - CHPID 11 is deleted and added again.
   - HCD now tries to connect to LPARs: In the CHPID statement LpA and LpC are referenced. If they do not exist, they will be created and CHPID 11 will be connected to LpA.

As a result LpB is now deleted, LpC is left untouched.

Note: If only notpart statements would be in the deck, both LpA and LpB would remain deleted, no LPARs could be connected and CHPID 11 could not be created.

2. A control unit is implicitly deleted, if its channel paths are respecified in the IOCP input data set together with their attached I/O units (except the control unit) and it no longer has any connection to a processor.
3. A device is implicitly deleted, if its attaching control units are implicitly deleted using the incremental update specification, and there is no additional connection left to any control unit or operating system.
4. To change control unit and device attributes, specify the entire logical control unit(s) (LCU) the control unit or device is part of. For migration to an OS configuration only (MVSCP data set), respecify the I/O device with the changed parameters. HCD will redefine the device in the corresponding subchannel set.
5. To change channel path attributes, specify all logical control units the channel path is connected to in the IOCP input data set. Otherwise, the channel path is disconnected from the corresponding control units.
6. To delete an esoteric device list, specify all device definitions in the MVSCP input data set, but do not connect them to the esoteric name.
7. To add a device to an esoteric device list, specify the esoteric with the device number.

   To delete a device from the esoteric device list, specify the device in an IODEVICE statement) but do not specify the device number for the esoteric device list.
8. An installed port can be set to uninstalled only if it does not belong to the minimum installed port range and does not hold a connection to a channel path or control unit.
9. To delete a console list, specify all contained devices using the IODEVICE statement but do not include the devices in a NIPCON statement.
10. If the usage type is not specified and you add a partition, the usage type is automatically defined: if the IOCP input data set contains a CF receiver channel path with the partition in its access or candidate list, the usage type is set to CF/OS, if not, the usage type is set to OS.
11. To change the partition name or partition number specify the whole partition configuration including all channel paths with attached I/O units which have the partition in their access and candidate lists.
12. (No longer used.)
13. To change a complete console device list, use the NIPCON statement.

    To remove a single device from the console list, specify the corresponding IODEVICE statement and omit the NIPCON statement.
14. To delete a switch-to-switch connection, specify a switch via a SWITCH statement and omit the switch-to-switch connection in the SWPORT parameter.
15. When updating switch ports new connections always overwrite a previous connection or status. To be updated with an occupied status the port must currently not be connected.
16. To remove the unique UID requirements for a partition, you need to code a complete UUID statement. The statement needs to reference all partitions that still need to have this capability defined. Removing the unique UID requirement from all partitions of a processor is not possible using this path.

How to invoke the incremental update

1. Specify your objects with IOCP, MVSCP, or HCPRIO control statements. Note that you can add additional parameters and SWITCH statements to exploit the extended migration as described under "Changing I/O configurations by editing data sets" on page 249).
2. Select ***Migrate configuration data*** on the ***Primary Task Selection*** panel and on the resulting screen select the ***Migrate IOCP/OS data*** option.

3. On the following Migrate IOCP / MVSCP / HCPRIO Data dialog (see Figure 244 on page 246), enter the required data and change the incremental update to Yes.
4. After the input has been accepted, HCD issues a message informing you that the migration of input data sets is in process.

Example 1: Adding a partition

In this example, you specify a partition in your input data set that does not yet exist in the IODF. The attached control units and devices are already defined in the IODF for another processor.

The following figure illustrates the result after the incremental update:

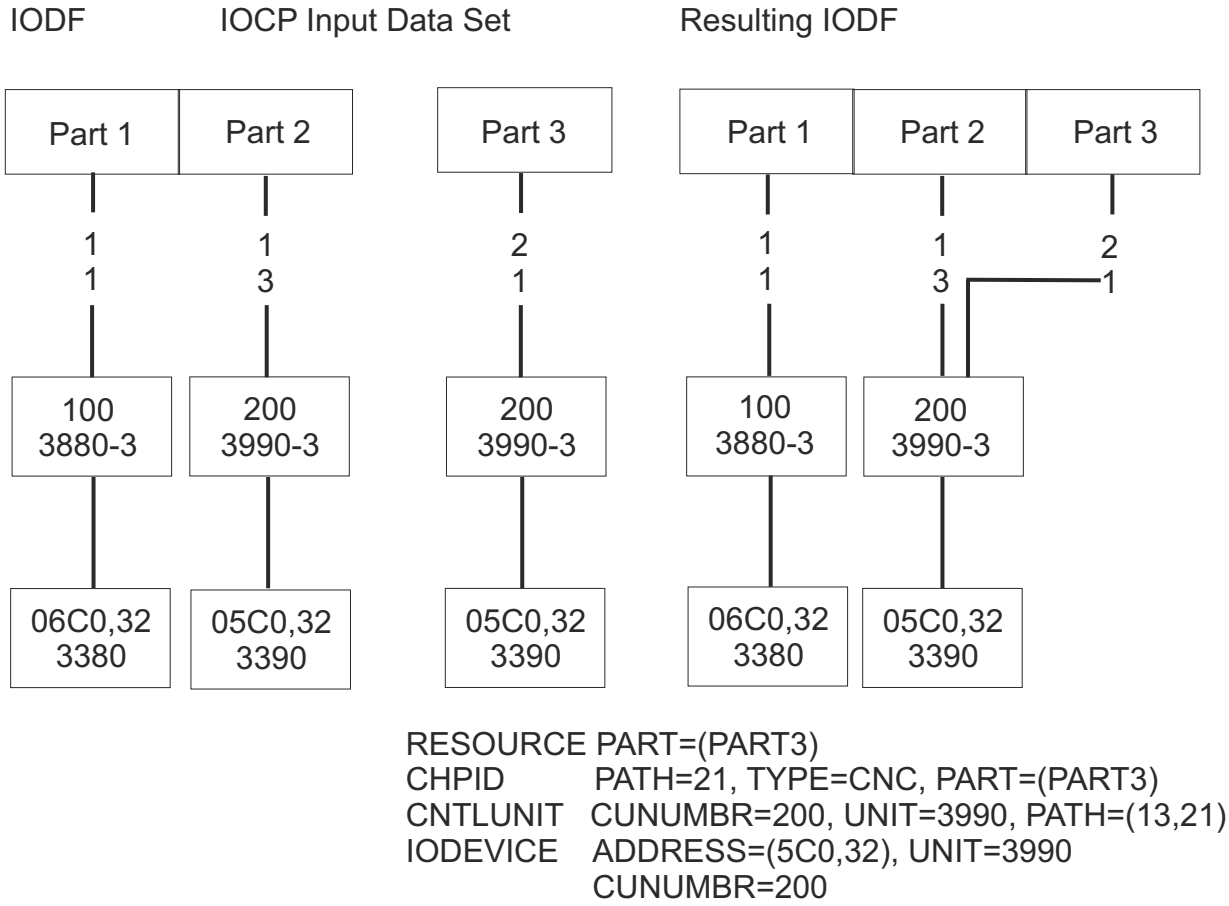

Figure 245. Partial Migration of an IOCP Input Data Set. A new partition is added. Control units and devices are mapped.

The partition is added and the control unit and devices are mapped. For a detailed description when control units and devices are mapped, refer to "Migrating additional IOCP input data sets" on page 242.

Example 2: Replacing a channel path and attached control unit

In this example, you specify a channel path with attached control unit and devices in an IOCP input data set. The channel path, the control unit, and one device already exist in the IODF.

The following figure illustrates the result after the incremental update:

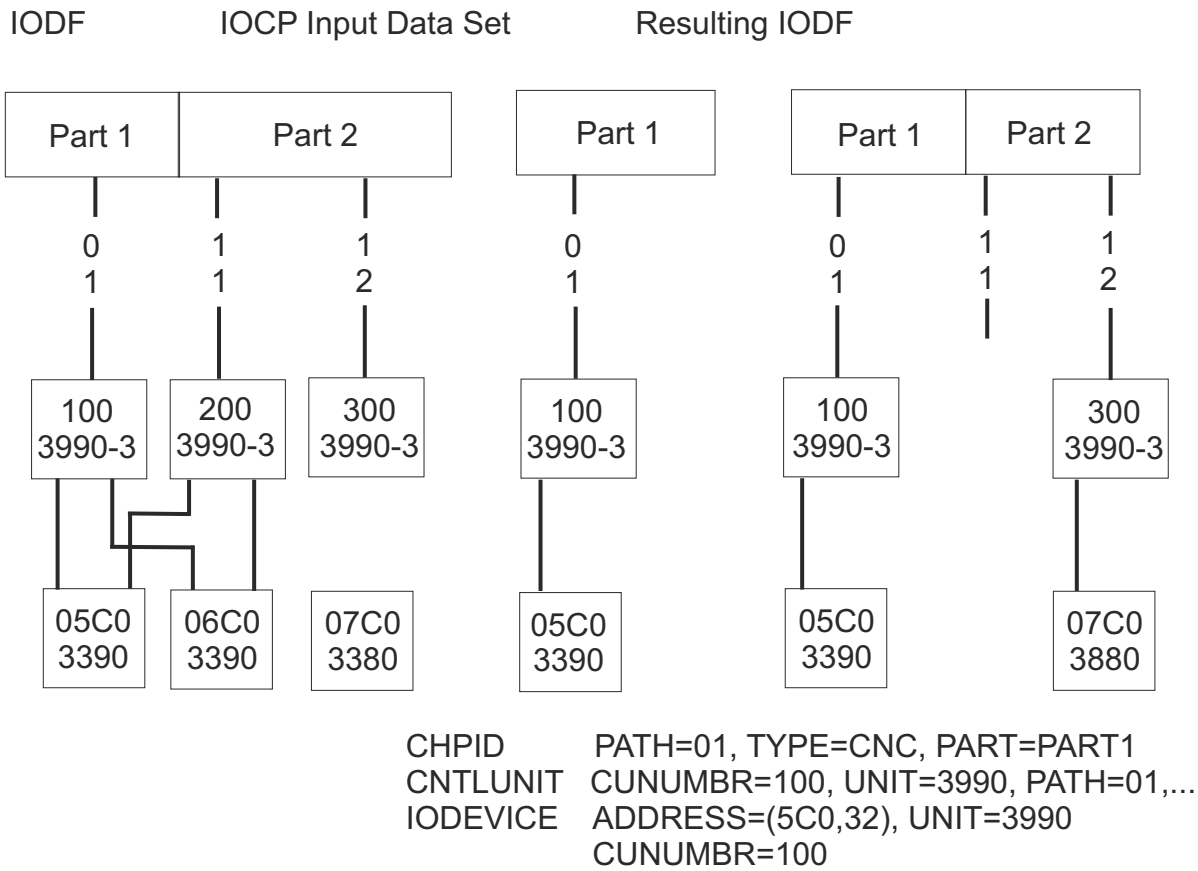

Figure 246. Partial migration of an IOCP input data set. The whole logical control unit (control unit 100 and 200 and connected devices) are replaced by control unit 100 and its connected devices.

The logical control unit in the IOCP input data set replaces the whole logical control unit in the IODF.

Example 3: Replacing a channel path with a new control unit

In this example, you specify channel paths with control unit and device in the input data set. The channel paths are already defined in the IODF, but connect to another control unit.

The following figure illustrates the result after the incremental update:

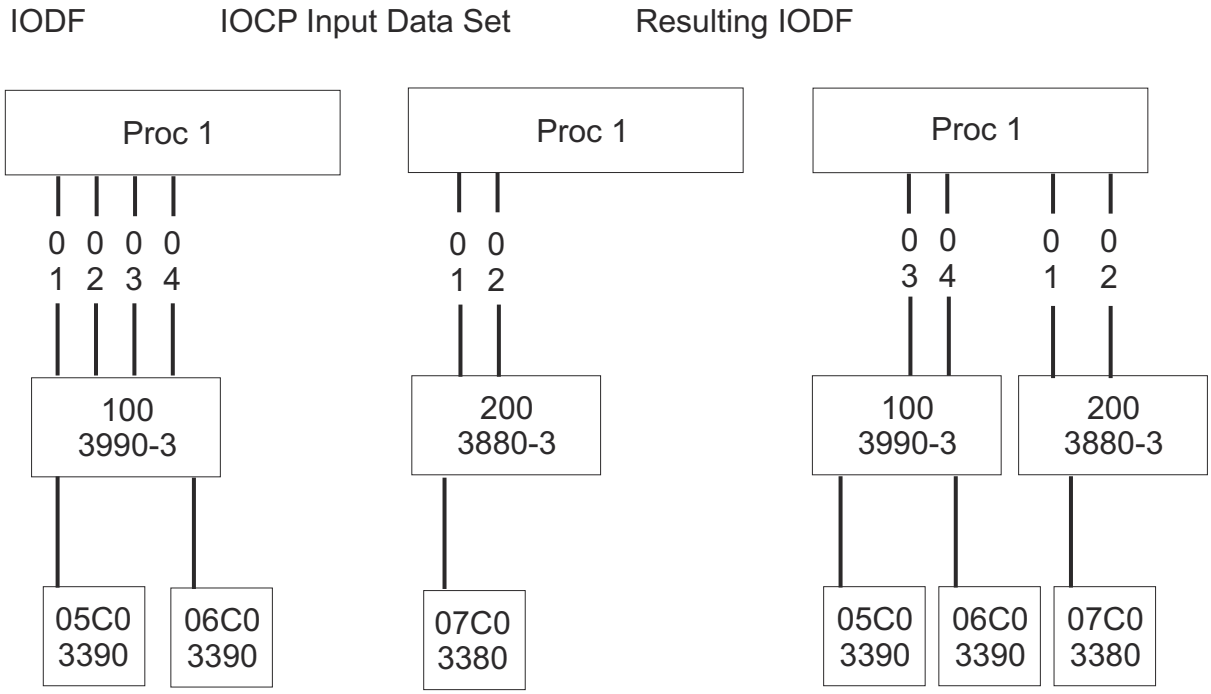


```
CHPID       PATH=01, TYPE=BL
CHPID       PATH=02, TYPE=BL
CNTLUNIT    CUNUMBR=200, UNIT=3880, PATH=(01,02),..
IODEVICE    ADDRESS=(7C0,32), UNIT=3380
            CUNUMBR=200
```

Figure 247. Partial migration of an IOCP input data set. CHPIDs are defined as in the IOCP input data set.

The channel paths in the IODF are deleted and newly defined as they are defined in the IOCP input data set.

Example 4: Replacing a control unit that attaches to two processors

In this example, you want to replace existing control units and devices by another type. The control units and devices are attached to two processors.

The incremental update must be done in several steps:

1. Specify another control unit number in your IOCP input data set than the one in the existing IODF. Specify the CHPID, CNTLUNIT, and IODEVICE control statements.
2. Migrate your input data set for the first processor.

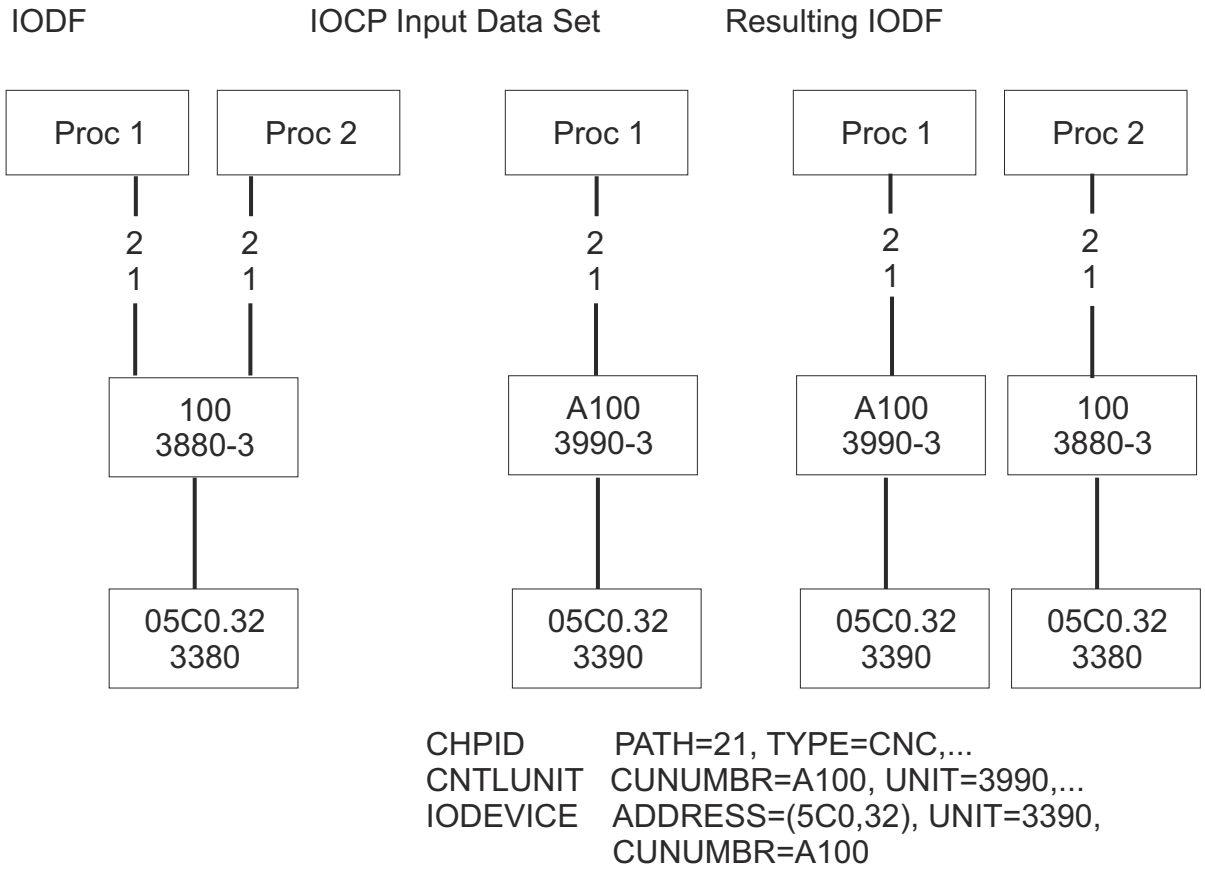

Figure 248. Partial migration of an IOCP input data set. Control unit defined for two processors is migrated to the first processor.

3. Migrate your input data set again for the second processor.

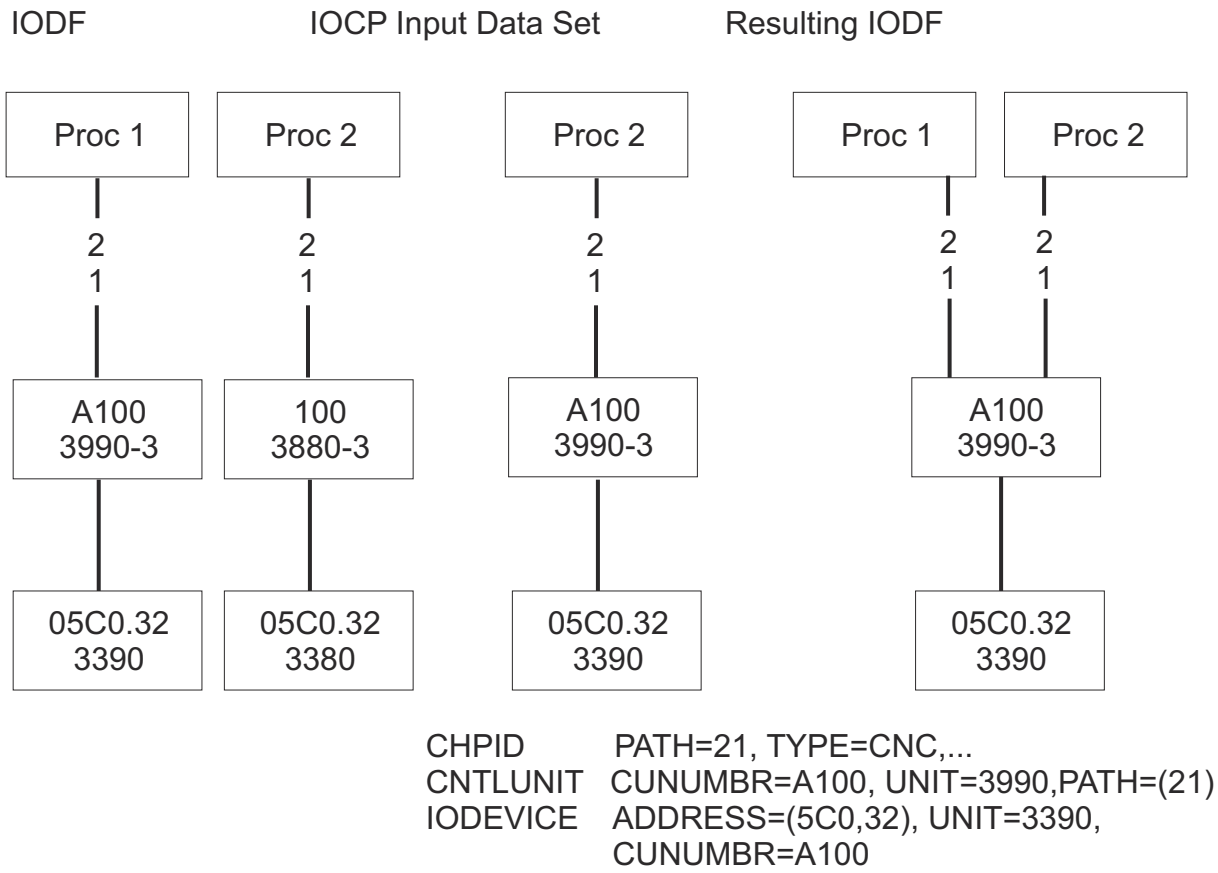

Figure 249. Partial migration of an IOCP input data set. Control unit defined for two processors is migrated to the second processor.

Example 5: Updating an operating system

In this example, you update an operating system by adding and changing EDTs, generics, esoterics, and console devices.

```
            IODF

EDT ID=01
UNITNAME=POOL1,UNIT=((700,8),(900,8))
UNITNAME=POOL2,UNIT=((100,16))
UNITNAME=TAPES,UNIT=((A80,4))

NIPCON DEVNUM=(40,41,42)
```

```
      MVSCP Input Data Set
IODEVICE ADDRESS=(800,8),UNIT=...,MODEL=...

EDT ID=01
UNITNAME=POOL1,UNIT=((800,8)),VIO=YES
UNITNAME=POOL3,UNIT=((0270,16))
UNITNAME=9345,VIO=YES

EDT ID=02
UNITNAME=TAPES,UNIT=((180,4))

NIPCON DEVNUM=(40,50,60)
```

```
       Resulting IODF
IODEVICE ADDRESS=(800,8),UNIT=...,MODEL=...

EDT ID=01
UNITNAME=POOL1,UNIT=((700,8),(800,8),(900,8)),VIO=YES
UNITNAME=POOL2,UNIT=((100,16))
UNITNAME=POOL3,UNIT=((0270,16))
UNITNAME=TAPES,UNIT=((A80,4))
UNITNAME=9345,VIO=YES

EDT ID=02
UNITNAME=TAPES,UNIT=((180,4))

NIPCON DEVNUM=(040,050,060)
```

Figure 250. Partial migration of an MVSCP input data set

You can either migrate the changes with a combined input data set or with an MVSCP only input data set. With a combined input data set, you can make CSS and operating system changes at the same time.

If you migrate an MVSCP only input data set, specify a processor and partition, with which device definitions in the input data sets will be associated in the IODF, on the Migrate IOCP / MVSCP /HCPRIO Data panel. HCD uses this information to map devices correctly if the IODF contains duplicate device numbers. For more information about this mapping, refer to "Migrating additional MVSCP or HCPRIO input data sets" on page 244.

The result after the migration is as follows:

- The definition of EDT input statements replaces the definition in the IODF, new definitions are added. That means in the example Figure 250 on page 282, EDT 01 is replaced and EDT 02 is added.
- Devices are added. To add devices, you also have to newly define the esoterics to which the devices are to be assigned.
- Devices in a UNITNAME statement are added to the devices already defined for the esoteric.
- The list of consoles is replaced.

Note: If an EDT statement is missing or specified without EDT ID, the EDT ID for esoterics and generics is taken from the ID of the IOCONFIG statement. If the IOCONFIG statement is also not available, the EDT ID will be assumed as '00'.

Resolving migration errors

If HCD detects an error when you migrate using the HCD dialog, it displays a message list when the migration has been completed.

Figure 251 on page 283 is an example of such a message list. It lists all the messages that were issued during the process. The list shows the statement number of the input statement for which the message was issued. You can now:

- Get explanations of messages in the list. To get explanations, use the ***Explain message*** action from the context menu or action code e.
- Delete messages that are of no further interest. That is, delete those messages that you do not want to appear in the *HCD migration log*.

```
                              Message List
  Query  Help
-----------------------------------------------------------------------
                                                                  Row 1 of 6

Select one or more messages, then press Enter.

 /  Statement Orig Sev Message Text
 -  9         1    E   Duplicate unit address F0 on channel path 01 of
 #                     processor BOEHCD.
 -  5         2    W   Type of control unit 0131 assumed as 3800-13 to
 #                     attach device 01F0.
                   I   No output written to IODF. VALIDATE processing
 #                     forced due to errors.
```

Figure 251. Message List

When you exit the message list or when you migrated your input data sets using the batch utility, HCD writes the error messages to the HCD migration log.

You can display the HCD migration log through ISPF. The name of the HCD migration log data set is developed from the name of the input data set, without high-level qualifier, and your user ID as follows:

```
userid.yyy.zzz.MESSAGES
```

where the input data set, without high-level qualifier, is:

```
yyy.zzz
```

or

```
yyy(zzz)
```

Errors detected during assembly process

During migration, HCD invokes the assembler to parse the input statements. If it encounters an error, it writes a message to the message list. This message points to an assembler listing for more details.

```
                           Message List
  Query  Help
-----------------------------------------------------------------------
                               Message List                        Row 1 of 2

Select one or more messages, then press Enter.

 /  Statement Orig Sev Message Text
 -                 T   Assembler processing returns with return code    =
 #                     8. See BPAN.CDS.CSYSIO.LISTING for details.
```

Figure 252. Message List containing an Assembler message

The name of the assembly listing data set is developed from the name of the input data set, without high-level qualifier, and your user ID as follows:

```
userid.yyy.zzz.LISTING
```

where the input data set, without high-level qualifier, is:

```
yyy.zzz
```

or

```
yyy(zzz)
```

At the bottom of the assembly listing, you find the statement numbers where errors were detected. If you locate the statement numbers in the listing, you see the IOCP statement in error followed by the error message. The following examples show IOCP statements and the assembly messages issued.

Example 1

In this example an entry in the IOCP input data set is commented out, but the continuation character $ is left in column 72.

```
7493 *        CNTLUNIT CUNUMBR=02E,PATH=(02,06),SHARED=N,UNIT=3990,       91A$
7494 *              UNITADD=((E),32)),PROTOCL=S4
```

The assembler listing shows the following message:

```
IEV144   *** ERROR ***  BEGIN-TO-CONTINUE COLUMNS NOT BLANK
```

Example 2

This example shows a line with only 87A being included in the IOCP input data set.

```
7493 *        CNTLUNIT CUNUMBR=234,PATH=24,SHARED=N,UNIT=3880,            87A
7494 *              UNITADD=(30,16),PROTOCL=S4                            87A
7495                                                                      87A
7496 *IOCP                                                                87A
```

The assembler listing shows the following message:

```
IEV144   *** ERROR ***  OPERATION CODE NOT COMPLETE ON FIRST CARD
```

Example 3

This example shows a wrong channel path type in the CHPID statement.

```
CHPID PATH=((00)),TYPE=CMC
```

The assembler listing shows the following message:

```
IEV144   *** MNOTE ***  8,003 TYPE=CMC  IS  INVALID
```

Errors detected during validation process

During the validation process, HCD checks that the definitions being migrated do not cause any conflicts with existing definitions in the IODF and with other definitions being migrated. HCD also checks that the contents of the input data sets is valid. The errors are shown in the message list and migration log.

Figure 253 on page 285 shows error messages in the migration log.

```
I/O Configuration Migration                Time: 11.39    Date: 94-11-26    Page:    1
MVS/ESA HCD V 5.2

(1) DSN=BBEI.IOCP01.CTL     1
(2) DSN=BBEI.MVSCP01.CTL

Statement  Orig  Sev  Msgid   Message Text

      9    (1)  E  CBDA230I  Duplicate unit address F0 on channel path 01 of processor BOEHCD.

      5    (2)  W  CBDA265I  Type of control unit 0131 assumed as 3880-13 to attach device 01F0.

                I  CBDA516I  No output written to IODF. VALIDATE processing forced due to
errors.

Total Messages   Terminating   Error   Warning   Informational
          3           0          1         1             1

Return Code was   8
```

Figure 253. Example: HCD Migration Log

The messages are sorted according to their severity, and within a certain severity level according to their occurrence.

The value in the Orig column points to the input data set that caused this error. At the start of the migration log you find a reference list that shows the values with the names of the input data sets (see the line marked 1).

In Figure 253 on page 285 the first message line means, that the statement number 9 in the input data set 1 (data set BBEI.IOCP01.CTL) is the cause of the error message.

The following examples show common validation errors and explain their causes.

Example 1

```
Statement Orig Sev  Msgid   Message Text

      7    (1)  E  CBDA154I  Channel path type CNC is not supported by channel
                             path ID 3A.
```

This message is issued, because an ESCON channel is defined although the support level was defined in the IODF as having only parallel channels installed for the specified CHPID. To resolve this, either change the channel type in the IOCP input data set, or change the processor type or support level in the IODF.

Example 2

```
Statement Orig Sev  Msgid   Message Text
```

```
       4    (1)  E  CBDA234I  Unknown type 38823 of control unit 0000
                              specified.
```

This message is issued, because HCD does not know the control unit type 38823. Select the ***Query supported hardware and installed UIMs*** from the ***Primary Task Selection*** panel or use the ***Query*** action bar choice for information on valid control unit and device types.

Example 3

```
Statement Orig Sev  Msgid     Message Text

     228   (1)   W  CBDA265I  Type 3800-3 assumed for control unit DD32
                              to attach the device 0828.
     227   (1)   I  CBDA534I  Control unit DD32 is assumed as 3800-1.
```

These messages are issued, because HCD has to choose the control unit type among several models.

The control unit model 3800-1 is indicated as default model in the UIM (information message CBDA534I is issued). As processing goes on, it is necessary to change the default model (3800-1) to another model (3800-3) to attach a device type which is not supported by the default control unit model (warning message CBDA265I is issued).

Note: The sequence of messages is shown in reverse order in the migration log file since the messages are sorted according to decreasing severities. To resolve this, either include the model in the IOCP input data set, map the control unit types via HCD profile entries, or update the IODF using the HCD dialog, if HCD has made an incorrect assumption.

Insufficient data set sizes

HCD dynamically allocates the data sets required for migration. It can happen that the default data set sizes are insufficient for the migration of the existing data. During the migration process, the system informs you by a message which data set needs to be enlarged. In that case, the data set needs to be preallocated with a larger size before invoking the HCD migration task again.

HCD uses, by default, the following ddnames and data set sizes:

- HCDPRINT

  Used for the HCD migration log.

  The data set name is built from the input data set name — if two input data sets are specified from the IOCP input data set name — qualified with 'MESSAGES'. If the input is a member of a partitioned data set, an additional qualifier - the name of the member - is inserted before 'MESSAGES'. The high-level qualifier of that data set name is replaced by the TSO prefix (user ID).

  The minimum allocation (also used as default allocation if the data set does not exist) is: RECFM=FBA, LRECL=133, BLKSIZE=2926, SPACE=(TRK,(1,10)), exclusive access.

- HCDASMP

  Contains the assembler SYSPRINT data set, which contains the assembly listing (input statements with sequence numbers and messages).

  The data set name is built from the input data set name qualified with 'LISTING'. If the input is a member of a partitioned data set, an additional qualifier - the name of the member - is inserted before 'LISTING'. The high-level qualifier of that data set name is replaced by the TSO prefix (user ID).

  The minimum allocation (also used as default allocation if the data set does not exist) is as follows: RECFM=FBA, LRECL=121, BLKSIZE=1573, SPACE=(TRK,(15,150)), exclusive access.

- HCDUT1

  Used by the assembler as a work data set (UNIT=SYSALLDA, LRECL=80, BLKSIZE=3200, SPACE=(TRK,(15,150)), exclusive access).

- HCDUT2

Used as output data set for the modified input stream and by the assembler as SYSIN data set (UNIT=SYSALLDA, LRECL=80, SPACE=(TRK,(10,15)), exclusive access).

- HCDUT3

  Used by the assembler as punch data set (SYSPUNCH).

  Used by the loader as input data set (UNIT=SYSALLDA, LRECL=80, SPACE=(TRK,(10,30)), exclusive access).

Note:

1. The sizes of the output data sets HCDUT2, HCDASMP, and HCDPRINT depend on the size of the input and on the number of messages produced. The space given under "Insufficient data set sizes" on page 286 should be taken as minimum allocation values.
2. For HCDASMP and HCDPRINT, HCD checks whether data sets with the default names exist. If so, the space allocations of these existing data sets are used if they exceed the minimum allocation values. If they are below the minimum allocation value, the data sets are deleted and allocated with a new (minimum) size. Correspondingly, the space of the HCDUT2 data set is made dependent on the input data set(s). This rule is only applicable if the ddnames have not been previously allocated.
3. Preallocate HCDASMP and HCDPRINT if:
   - You want to have them on a different data set than the default one
   - You want to place these data sets on a specific volume
   - The default size is not large enough
   - A size different from the default size should be used.

Chapter 13. How to invoke HCD batch utility functions

You can invoke HCD batch utility functions:

- With an input parameter string. The following syntax diagram shows how to invoke an HCD batch utility function. For formats of the input parameter strings and sample batch jobs, see "Input parameter string" on page 290.

  HCD Batch Invocation

  ▶▶ EXEC — PGM — = — CBDMGHCP — , — PARM — = — ' — [Input Parameter String] — ' —▶◀

- By using an ATTACH or LINK module programming statement to invoke the module CBDMGHCP.

  When you invoke the module, register 1 must contain the address of a two-word parameter list.

  Word 1
  Address of input parameter (see "Input parameter string" on page 290), preceded by a two byte length field.

  Word 2
  Address of a list of alternate DD names. If not used, the address must be binary zero. For the list format of alternate DD names see "List of alternate DD names" on page 319.

You may overwrite standard DD names listed in Table 21 on page 318 as desired before invoking HCD.

If you specify the UIMs and UDTs in a library other than SYS1.NUCLEUS, you have to add the following statement to your batch jobs:

```
//HCDPROF DD DSN=BPAN.HCD.PROF,DISP=SHR
```

In the HCD profile (in our example BPAN.HCD.PROF) specify the following keyword:

```
UIM_LIBNAME=libname
```

If the keyword is omitted, SYS1.NUCLEUS is assumed. If you specify an asterisk (*) as data set name, HCD assumes that the UIM data set is part of the ISPF load library concatenation chain, contained in the JOBLIB/STEPLIB concatenation chain, or specified in the active LNKLSTxx member. For more information, see "Defining an HCD profile" on page 16.

Running jobs in a sysplex environment:

If you want to execute a job on a specific system in a sysplex, you must specify in your batch job which system is to be used. If you do not specify the exact system of a sysplex for which the batch job is planned to execute on, the job executes on the system that has the free space to run on.

The output from some of the HCD functions depend very much on where the job was executed; for example, downloading IOCDSs and requesting the I/O Path report.

How to Read Syntax Diagrams

For details on this subject see "How to read syntax diagrams" on page xxxiii.

Note: Trailing commas in the parameter string can be omitted.

© Copyright IBM Corp. 1994, 2022

Input parameter string

Input Parameter String

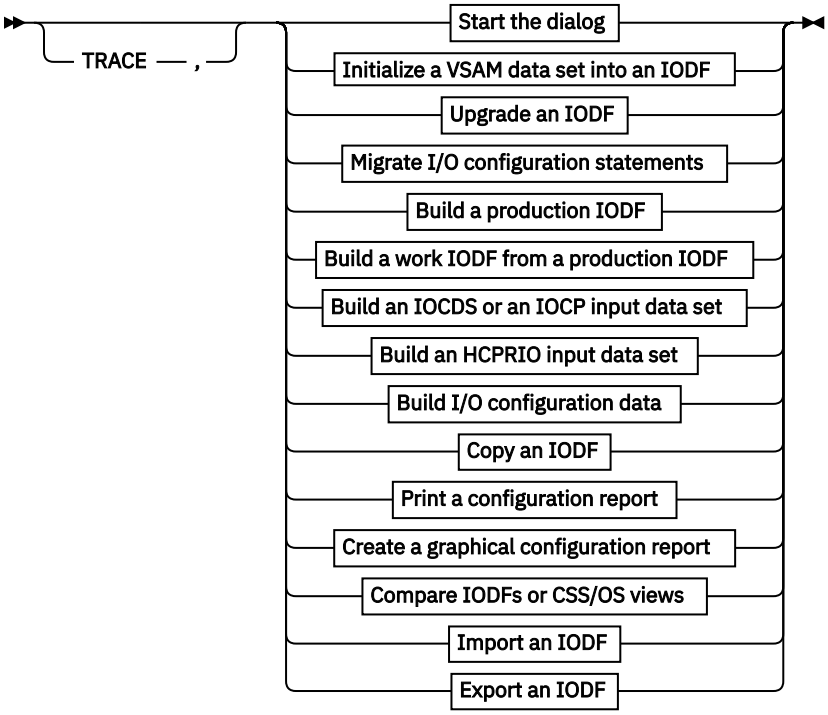

TRACE
When specified, the HCD trace will be activated.

Input Parameter String
You will find a detailed description of the input parameter strings in the following sections.

You can also activate tracing by adding the TRACE command in the HCD profile. This allows you to specify the trace parameters in more detail. In this case, you must allocate DD name HCDPROF to the HCD profile when invoking the batch utility. For more information, see "Defining an HCD profile" on page 16, and "TRACE command" on page 404.

Start the dialog

This utility function starts the HCD (ISPF) Dialog session. The HCD primary task selection panel is displayed.

This function is invoked by passing the following parameter string.

Start the dialog

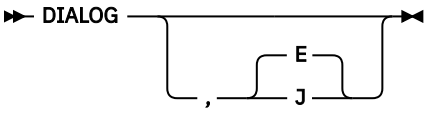

E | J
is a one-character code for national language support in help panels and messages. Specify one of the following (if omitted, the default is E):

E
for English

J
for Japanese

Initialize IODF

This utility function initializes a defined VSAM DIV file into an IODF. Each IODF contains as first record a header record, called the IHR (IODF Header Record). This record contains, among other information, the size of the IODF, an optional description of up to 128 characters, as well as an option whether activity logging is enabled or disabled. HCD rejects any data set that does not contain such a header record.

The VSAM DIV file must be preallocated using DD name HCDIODFT. You can add an optional IODF description using DD name HCDCNTL.

This function is invoked by passing the following parameter string.

Initialize a VSAM data set into an IODF

```
►► INITIODF ── SIZE ── = ── nnnn ──┬──────────────────────────────────┬──►
                                   │                   ┌─ YES ─┐      │
                                   └─ , ── ACTLOG ── = ─┴─ NO ──┴──────┘

►──┬──────────────┬──►◄
   └─ , ── FORCE ─┘
```

SIZE=*nnnn*
nnnn specifies the size of the IODF in 4K blocks. This value must not be greater than the number of records specified with the IDCAMS Define Cluster control statement. If SIZE=0 is specified, the number of allocated records of the VSAM data set is used. If an existing IODF is re-initialized, the specified size value must not be smaller than the number of allocated IODF blocks.

ACTLOG=(YES | NO)
specifies enabling of activity logging. If omitted, the default is YES.

FORCE
indicates that reinitialization of an existing IODF is allowed.

Batch invocation

A data set must be allocated to the following DD names when invoking the batch utility.

DD name	Description
HCDIODFT	IODF to be initialized
HCDCNTL	Up to 128 characters used as description for the IODF.
HCDMLOG	HCD Message Log data set
HCDTRACE	Trace data set (if trace is activated)

The following example shows the IDCAMS control statements necessary to define a VSAM DIV file.

```
DEFINE CLUSTER (NAME (SYS1.IODF01.CLUSTER) -
       LINEAR -
       RECORDS (1024) -
       VOLUMES (DATA02) -
       ) -
       DATA (NAME (SYS1.IODF01))
```

For an example see the batch job in “Batch IODF copy example” on page 317.

Note:

1. This batch job issues a job message IEC161I, which can be ignored.
2. The VSAM DIV file consists of a data and a cluster file. According to the IODF naming convention (see “IODF naming convention” on page 29), the name of the data file is the IODF name (in this example SYS1.IODF01), and .CLUSTER is appended to the data file for a cluster file. To define your VSAM DIV

file, you must append .CLUSTER to the IODF name in the DEFINE CLUSTER statement (in this example SYS1.IODF01.CLUSTER).

Upgrade IODF

This utility function upgrades a back-level IODF to be accessible with the current HCD release.

You have to allocate:

- The IODF you want to upgrade with DD name HCDIODFS
- The IODF into which the I/O definitions are to be upgraded with DD name HCDIODFT

This function is invoked by passing the following parameter string.

Upgrade an IODF

```
►►─ UPGRADE ─►◄
```

Note:

1. The target data set must be large enough to hold the source IODF.
2. The target IODF may be created using the utility ***Initialize IODF*** (described in "Initialize IODF" on page 291).
3. Both data sets must be valid IODFs.

Batch invocation

A data set must be allocated to the following DD names when invoking the batch utility.

DD name	Description
HCDIODFS	Back-level IODF to be upgraded
HCDIODFT	IODF into which IODF definitions are to be upgraded (if not specified, the IODF is upgraded in place)
HCDMLOG	HCD Message Log data set
HCDTRACE	Trace data set (if trace is activated)

Example:

```
//BWINJOB  JOB (3259,RZ-28),'BWIN',NOTIFY=BWIN,CLASS=A,
//             MSGCLASS=Q,MSGLEVEL=(1,1),REGION=4M
//*
//* UPGRADE IODF
//*
//UPGRADE  EXEC PGM=CBDMGHCP,PARM='UPGRADE'
//HCDIODFS DD   DSN=BWIN.IODFR2.WORK,DISP=SHR
//HCDIODFT DD   DSN=BWIN.IODF00.WORK,DISP=OLD
//HCDMLOG  DD   DSN=BWIN.HCD.LOG,DISP=OLD
//
```

Migrate I/O configuration statements

This utility function allows you to migrate the data set containing I/O configuration statements, e. g. an IOCP, MVSCP, or HCPRIO input data set and store the definitions into an IODF.

You have to allocate:

- The IODF into which the I/O definitions are to be migrated with DD name HCDIODFT
- The I/O configuration input data set with DD name HCDIN
- The MACLIB containing the parsing macros with DD name HCDLIB

This function is invoked by passing the following parameter string.

Migrate I/O configuration statements

```
►► MIGR ── , ┬─────────────────────────────────────────────────────────┬►◄
             ├─ I ─┬─ processor parameters ─┬─────────────────────────┤
             │     └─ IP ─┘                │                         │
             │                             └─ , ── * ────────────────┘
             ├─ O ─┬─ OS parameters ─┬─ association ─┬─────────────────┤
             │     └─ OP ─┘          │               │                 │
             │                       └─ , ── * ──────┘                 │
             ├─ B ─┬─ OS parameters ─┬─ processor parameters ─┬────────┤
             │     └─ BP ─┘          │                        │       │
             ├─────────────────────── S ── , ── * ────────────────────┤
             └─────────────────────── C ── , ── procid ───────────────┘
```

processor parameters

```
►► , ┬─ procid ─┬─ , ── proctype ── , ┬─ procmode ─┬►
     ├─ procid.cssid ─┤              │            │
     └─ procid(#cssid) ─┘            └────────────┘

     ┬──────────────────────────┬►◄
     └─ , ── support_level_ID ─┘
```

OS parameters

```
►► , ── osid ── , ── ostype ►◄
```

association

```
►► , ── asproc ┬──────────────────┬►◄
               └─ , ── aspart ─┘
```

procmode

```
►► ┬─ BASIC ─┬►◄
   └─ LPAR ─┘
```

I | IP | O | OP | B | BP | S | C

Function indicator:

I

Migration of processor configuration statements (e. g. IOCP data sets)

IP

Partial migration of processor configuration statements

O

Migration of OS configuration statements (for example MVSCP or HCPRIO data sets)

OP

Partial migration of OS configuration statements

B

Combined migration of processor and OS configuration statements

BP

Partial combined migration of processor and OS configuration statements

S

Switch migration

C
physical channel ID (PCHID) migration

Processor related variables and keywords:

procid
Processor ID (up to 8 characters)

procid.cssid, procid(#cssid)
When migrating an SMP processor to an XMP processor, the channel subsystem ID of the target processor may be appended to the processor ID as one character either by a # and in parenthesis or by a dot (.). The default is 0.

proctype
Processor type and model separated by a hyphen, for example 9672-E08

procmode
Processor mode

BASIC
If the processor operates in BASIC mode (default).

LPAR
If the processor operates in LPAR mode.

support_level_ID
Support level ID associated with the processor. This parameter is required if the processor does not already exist and several support level IDs are installed for a supported processor type. The support level ID can be obtained by the ***List supported processors*** function or by the supported hardware report described in "Print configuration reports" on page 304. For an example of a supported hardware report refer to "Supported hardware report" on page 358.

If you do not specify a support level, the highest support level will be used for the processor.

Note: The support level ID is unique to HCD and does not correspond to the EC level of the processor.

*****
Allows multiple processor configurations to be migrated. Scans the input data set to determine which processor configurations are to be processed. For successful migration the configurations must include the ID statement described in "Processor" on page 259.

OS related parameters:

osid
Operating system ID (up to 8 characters)

ostype
OS type (MVS or VM)

asproc
Associated processor. For more information, see "Migrating additional MVSCP or HCPRIO input data sets" on page 244

aspart
Associated partition. For more information, see "Migrating additional MVSCP or HCPRIO input data sets" on page 244

*****
Allows multiple OS configurations to be migrated. Scans the input data set to determine which OS configurations are to be processed. For successful migration the configurations must include the IOCONFIG statement described in "Operating system" on page 252.

Switch related wildcard:

*****
Allows switch configurations of multiple switches to be migrated. Scans the input data set to determine which switch configurations are to be processed. For successful migration the configurations must include the SWCONF statement described in "Switch configuration" on page 257.

Batch invocation

A data set must be allocated to the following DD names when invoking the batch utility.

DD name	Description
HCDIODFT	IODF into which I/O definitions are to be migrated
HCDIN	I/O configuration input data set
HCDLIB	MACLIB containing the parsing macros (CBDZPARS)
HCDMLOG	HCD Message Log data set
HCDPRINT	Data set for migration log (see “Insufficient data set sizes” on page 286)
HCDASMP	Data set for assembly listing (see “Insufficient data set sizes” on page 286)
HCDPROF	HCD profile (when using extended migrate function)
HCDTRACE	Trace data set (if trace is activated)

For defaults of HCDPRINT and HCDASMP, for preallocating additional migration data sets, and for viewing the migration log see “Resolving migration errors” on page 283. **Example:**

```
//BWINJOB  JOB (3259,RZ-28),'BWIN',NOTIFY=BWIN,CLASS=A,
//             MSGCLASS=Q,MSGLEVEL=(1,1),REGION=4M
//*
//* MIGRATE AN IOCP DECK
//*
//MIGRATE  EXEC PGM=CBDMGHCP,
//            PARM='MIGR,I,PROC1,9672-E08,LPAR'
//HCDIODFT DD   DSN=BWIN.IODF03.WORK,DISP=OLD
//HCDIN    DD   DSN=BWIN.IOCP.DECK,DISP=SHR
//HCDLIB   DD   DSN=SYS1.MACLIB,DISP=SHR
//HCDMLOG  DD   DSN=BWIN.HCD.LOG,DISP=OLD
//HCDPRINT DD   DSN=BWIN.IOCP.MESSAGES,DISP=OLD
//HCDASMP  DD   DSN=BWIN.IOCP.LISTING,DISP=OLD
//
```

Build a Production IODF

This utility function creates a production IODF using the work IODF. The work IODF has to be specified with DD name HCDIODFS, the target production IODF with DD name HCDIODFT. First, the target production IODF has to be created by defining a VSAM DIV file and initializing it using the utility Initialize IODF (see “Initialize IODF” on page 291). If the target IODF is the active IODF (used for IPL and holding the active processor configuration) the IODF will not be replaced and build production IODF will be rejected.

If the work IODF has an associated MCF, the MCF data set is copied and associated to the production IODF.

After the production IODF has been built, it is copied back to the work IODF. Thus, the work IODF contains the new tokens and can be used for further updates. Since the production IODF may be larger than the original work IODF, the work IODF may be automatically enlarged to accommodate the contents of the production IODF.

This function is invoked by passing the following parameter string.

Build a Production IODF

```
►► PRODIODF ──┬──────────────────────────────────────────────────────────┬──►◄
              │──────────── DESC1 ── = ── descriptor1 ──────────────────│
              │──────────── DESC2 ── = ── descriptor2 ──────────────────│
              └── DESC1 ── = ── descriptor1 ── , ── DESC2 ── = ── descriptor2 ──┘
```

DESC1=*descriptor 1*
Default is the first qualifier of the production IODF name (up to 8 characters).

DESC2=*descriptor 2*
Default is the second qualifier of the production IODF name, which is IODFxx (up to 8 characters).

The descriptor fields describe the IODF and will be part of the HSA token. **Attention:** If you specify asterisks (**), equals (==), pluses (++), or minuses (--) for the IODF suffix in LOADxx, never change the default descriptor field values, because z/OS uses these values to find the current IODF during IPL. Take this relationship also into consideration, if you copy the IODF to a different data set name.

Batch invocation

A data set must be allocated to the following DD names when invoking the batch utility.

DD name	Description
HCDIODFS	Work IODF
HCDIODFT	Production IODF
HCDMLOG	HCD Message Log data set
HCDTRACE	Trace data set (if trace is activated)

Example:

```
//BWINJOB  JOB (3259,RZ-28),'BWIN',NOTIFY=BWIN,CLASS=A,
//             MSGCLASS=Q,MSGLEVEL=(1,1),REGION=4M
//*
//* BUILD PRODUCTION IODF
//*
//PROD     EXEC PGM=CBDMGHCP,
//             PARM='PRODIODF DESC1=BWIN,DESC2=IODF03'
//HCDIODFS DD   DSN=BWIN.IODF03.WORK,DISP=OLD
//HCDIODFT DD   DSN=BWIN.IODF03,DISP=OLD
//HCDMLOG  DD   DSN=BWIN.HCD.LOG,DISP=OLD
//
```

Build a work IODF from a production IODF

This utility function creates a work IODF using an existing production IODF. The production IODF has to be specified with DD name HCDIODFS, the target work IODF with DD name HCDIODFT. First, the work IODF has to be created by defining a VSAM DIV file and initializing it using the utility Initialize IODF (see “Initialize IODF” on page 291). If the target IODF is the active IODF (used for IPL and holding the active processor configuration) the IODF will not be replaced and build work IODF will be rejected.

This function is invoked by passing the following parameter string.

Build a Work IODF

```
►►─ WORKIODF ─►◄
```

Batch invocation

A data set must be allocated to the following DD names when invoking the batch utility.

DD name	Description
HCDIODFS	Production IODF
HCDIODFT	Work IODF
HCDMLOG	HCD Message Log data set

DD name	Description
HCDTRACE	Trace data set (if trace is activated)

Example:

```
//BWINJOB  JOB (3259,RZ-28),'BWIN',NOTIFY=BWIN,CLASS=A,
//             MSGCLASS=Q,MSGLEVEL=(1,1),REGION=4M
//*
//* BUILD WORK IODF
//*
//WORK     EXEC PGM=CBDMGHCP,PARM='WORKIODF'
//HCDIODFS DD   DSN=BWIN.IODF03,DISP=SHR
//HCDIODFT DD   DSN=BWIN.IODF03.WORK,DISP=OLD
//HCDMLOG  DD   DSN=BWIN.HCD.LOG,DISP=OLD
//
```

Build an IOCDS or an IOCP input data set

This utility function builds the IOCDS or the IOCP input data set using the definitions of a production IODF. This function is invoked by passing the following parameter string.

Build an IOCDS or an IOCP input data set

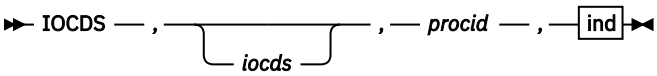

ind

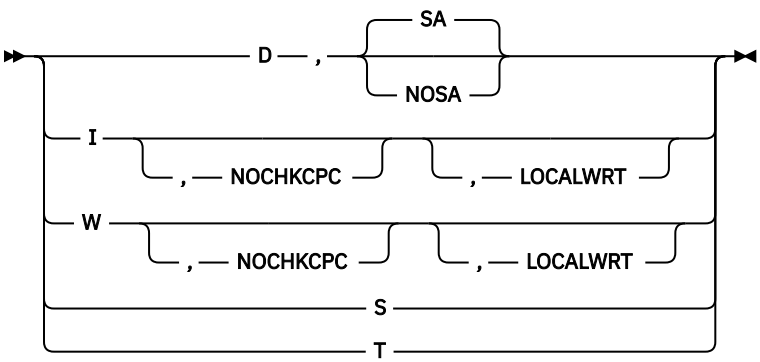

iocds
is a two-character IOCDS identifier, if building an IOCDS

procid
Processor ID

D | I | W | S | T
One-character request code:

D
Build an IOCP input data set

SA
The generated IOCP statements can be used for the stand-alone IOCP program (default).

NOSA
Depending on the HCD profile option MIGRATE_EXTENDED=YES, the generated IOCP statements have additional information that can be used for the extended migration. This information is shown as comments to IOCP.

Note: An IOCP input data set generated with operand NOSA may not be accepted by the stand-alone IOCP program, because of differences between the IOCP program running in z/OS and the stand-alone IOCP program.

I
Build an IOCDS

NOCHKCPC
Write an IOCDS regardless of the type of the receiving processor. Refer to "Supported hardware report" on page 358 for a list of processor types that can receive an IOCDS in preparation for a processor upgrade and for processor types for which such an IOCDS can be written.

LOCALWRT
This parameter enforces a local IOCDS write. A defined SNA address which is normally used by HCD to initiate a remote IOCDS build to the support element with the designed SNA address, is ignored in this case.

W
Build an IOCDS with dual-write option (optionally with **NOCHKCPC** and **LOCALWRT**, see option **I**).

S
Build an IOCDS and set the IOCDS active for next POR

T
Build an IOCDS with dual-write option and set the IOCDS active for next POR

Batch invocation

A data set must be allocated to the following DD names when invoking the batch utility.

DD name	Description
HCDIODFS	Source IODF
HCDDECK	IOCP data set (if build IOCP input data set is requested)
HCDCNTL	Control data set for specifying the MSG1 IOCP parameter
SYSPRINT	SYSPRINT data set for IOCP output listing (requested for build IOCDS)
SYSIN	Temporary work file used as IOCP input deck
HCDMLOG	HCD Message Log data set
HCDPROF	HCD profile (when generating additional information for extended migration)
HCDTRACE	Trace data set (if trace is activated)

Example 1:

The following example shows a ***Build IOCDS*** job.

```
//BWINJOB  JOB (3259,RZ-28),'BWIN',NOTIFY=BWIN,CLASS=A,
//             MSGCLASS=Q,MSGLEVEL=(1,1),REGION=5M
//*
//* BUILD IOCDS (WITH DUAL-WRITE OPTION)
//*
//IOCDS    EXEC PGM=CBDMGHCP,
//            PARM='IOCDS,A0,PROC1,W'
//HCDIODFS DD   DSN=BWIN.IODFA3,DISP=OLD
//HCDMLOG  DD   DSN=BWIN.HCD.LOG,DISP=OLD
//SYSPRINT DD   DSN=&&IOCPOUT,DCB=(RECFM=FBA,LRECL=133,BLKSIZE=6650),
//             SPACE=(CYL,(1,1)),DISP=(NEW,PASS,DELETE),UNIT=SYSALLDA
//SYSIN    DD   DSN=&&TEMP,DISP=(NEW,DELETE),SPACE=(CYL,(1,1)),
//             DCB=(RECFM=FB,LRECL=80,BLKSIZE=6080),UNIT=SYSALLDA
//HCDCNTL  DD   *
IOCDSNAM
/*
//* EXECUTED ONLY IF RETURN CODE HIGHER THAN 0
//PRINT    EXEC PGM=IEBGENER,COND=(0,EQ,IOCDS)
//SYSUT1   DD   DSN=&&IOCPOUT,DISP=(OLD,DELETE)
//SYSUT2   DD   SYSOUT=*
//SYSIN    DD   DUMMY
//SYSPRINT DD   DUMMY
//*
//CLEANUP  EXEC PGM=IEFBR14,COND=(0,NE,IOCDS)
//SYSUT    DD   DSN=&&IOCPOUT,DISP=(OLD,DELETE)
//
```

Figure 254. Build IOCDS job

Example 2:

The following example shows a ***Build IOCP input data set*** job.

```
//BWINJOB  JOB (3259,RZ-28),'BWIN',NOTIFY=BWIN,CLASS=A,
//             MSGCLASS=Q,MSGLEVEL=(1,1),REGION=5M
//*
//* BUILD IOCP DECK
//*
//IOCP     EXEC PGM=CBDMGHCP,
//            PARM='IOCDS,,PROC1,D,SA'
//HCDIODFS DD   DSN=BWIN.IODFA3,DISP=SHR
//HCDDECK  DD   DSN=BWIN.IOCP3.DECK,DISP=OLD
//HCDMLOG  DD   DSN=BWIN.HCD.LOG,DISP=OLD
//HCDCNTL  DD   *
IOCDSNAM
/*
//
```

Figure 255. Build IOCP input data set

Note: HCDCNTL specifies the value of the MSG1 parameter (in the example: IOCDSNAM) which is the identification information printed on the first ID line of the heading of the IOCP input data set. Specify the text without any keyword and quotation-marks. The first eight characters are used as IOCDS name.

Activate a production IODF

This utility function activates an I/O configuration from an existing production IODF. Both the active IODF and the target IODF have to be accessible.

This function is invoked by passing the ACTIVATE command in the parameter string (PARM='...'), as shown in the example. The parameter string uses the same syntax as described for the ACTIVATE command in *z/OS MVS System Commands*.

Batch invocation

A data set must be allocated to the following DD names when invoking the batch utility.

DD name	Description
HCDMLOG	HCD Message Log data set

DD name	Description
HCDTRACE	Trace data set (if trace activated)

Example

```
//BBEIJOB JOB (3259,RZ-28),'BBEI',NOTIFY=BBEI,CLASS=A,
//            MSGCLASS=Q,MSGLEVEL=(1,1),REGION=0M
//*
//* ACTIVATE PRODUCTION IODF
//*
//WORK     EXEC PGM=CBDMGHCP,PARM='ACTIVATE IODF=01,TEST'
//HCDMLOG  DD   DSN=BBEI.HCD.MSGLOG,DISP=OLD
//
```

Figure 256. Activate IODF job

Build an HCPRIO input data set

This utility function creates an HCPRIO input data set using the definitions of a VM operating system in a production IODF.

The IODF from which I/O definitions are extracted has to be specified with DD name HCDIODFS, and the HCPRIO input data set with DD name HCDDECK.

This function is invoked by passing the following parameter string.

Build an HCPRIO input data set

```
►► VMBUILD ── , ── H ── , ── osid ►◄
```

H
Function indicator for HCPRIO input data set

osid
VM operating system ID (up to 8 characters)

Batch invocation

A data set must be allocated to the following DD names when invoking the batch utility.

DD name	Description
HCDIODFS	IODF from which I/O definitions are extracted
HCDDECK	VM I/O configuration data set
HCDMLOG	HCD Message Log data set
HCDTRACE	Trace data set (if trace is activated)

Example:

```
//BWINJOB  JOB (3259,RZ-28),'BWIN',NOTIFY=BWIN,CLASS=A,
//             MSGCLASS=Q,MSGLEVEL=(1,1),REGION=4M
//*
//* BUILD AN HCPRIO INPUT DATA SET
//*
//HCPRIO   EXEC PGM=CBDMGHCP,PARM='VMBUILD,H,VM1'
//HCDIODFS DD   DSN=BWIN.IODF03,DISP=SHR
//HCDDECK  DD   DSN=BWIN.HCPRIO3.DECK,DISP=OLD
//HCDMLOG  DD   DSN=BWIN.HCD.LOG,DISP=OLD
//
```

Build I/O configuration data

This utility function allows you to build I/O configuration statements from an IODF and to store them in a data set. The statements describe:

- Operating system configurations
- Processor configurations
- Switch configurations

The data sets created can be edited and re-migrated into the IODF.

In addition, you can build:

- JES3 initialization stream checker data
- CONFIGxx members (from production IODF only)
- FCP device data

You invoke this function by passing the following parameter string:

Build I/O configuration data

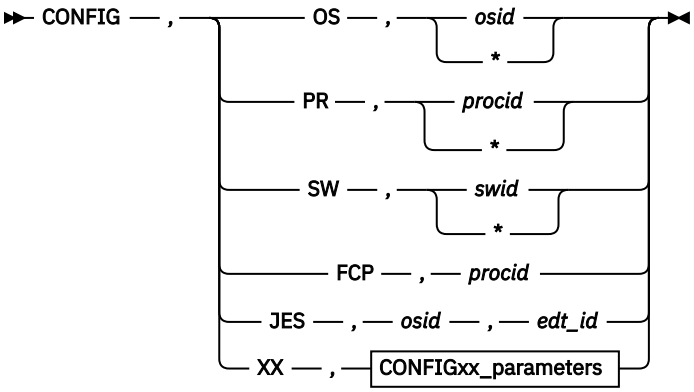

CONFIGxx_parameters

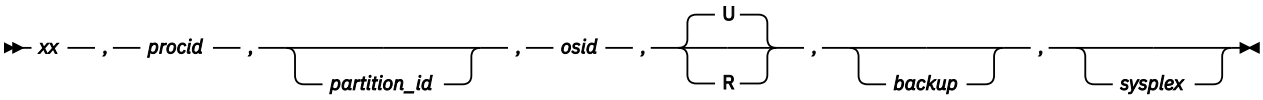

OS | PR | SW | FCP |JES | XX
Function indicator:

OS
Build OS configuration statements

osid
OS configuration ID (up to 8 characters)

*****
If you specify * in place of an OS configuration ID, HCD searches for a list of OS configuration IDs in a data set allocated to HCDCNTL. If no data set has been allocated to DD name HCDCNTL, statements are built for all operating systems in the IODF.

PR
Build processor configuration statement

procid
Processor ID (up to 8 characters)

*****
If you specify * in place of a processor ID, HCD searches for a list of processor IDs in a data set allocated to HCDCNTL. If no data set has been allocated to DD name HCDCNTL, statements are built for all processors in the IODF.

If only the coupling facility partition and CF receive channels are to be generated for a particular processor, the respective processor ID in the list has to be qualified by the keyword CF, according to the following syntax:

Processor ID

```
►► procid ──┬──────────┬──►◄
            └─ , ── CF ─┘
```

SW
Build switch configuration statements

swid
Switch ID (2 hexadecimal characters)

*****
If you specify * in place of a switch ID, HCD searches for a list of switch IDs in a data set allocated to HCDCNTL. If no data set has been allocated to DD name HCDCNTL, statements are built for all switches in the IODF.

Furthermore, specifying an asterisk (*) as switch ID, and setting the profile keyword SHOW_CONFIG_ALL to YES, additionally generates configuration statements for control units and devices without a processor and OS connection.

FCP
Export FCP device data into CSV output format

procid
Processor ID (up to 8 characters) for which to export the FCP device data.

JES
Build JES3 initialization stream checker data

osid
OS configuration ID (up to 8 characters)

edt_id
EDT ID (2 hexadecimal characters)

XX
Build CONFIGxx members

xx
Suffix of the CONFIGxx member to be built

procid
Processor ID (up to 8 characters)

partition_id
Partition name; required entry, if the processor is in LPAR mode (up to 8 characters).

osid
OS configuration ID (up to 8 characters)

U/R
U updates the current CONFIGxx member. The CHP and DEVICE statements are replaced and all other statements remain unchanged. This is the default.

R deletes the current CONFIGxx member and generates new CHP and DEVICE statements.

backup
Name for the backup copy of the current CONFIGxx member (up to 8 characters).

sysplex
Name of the sysplex used for setting managed channel paths to ONLINE.

Batch invocation

A data set must be allocated to the following DD names when invoking the batch utility.

DD name	Description
HCDIODFS	Source IODF
HCDDECK	Generated output data set For CONFIGxx this must be a data set name of a partitioned data set.
HCDMLOG	HCD Message Log data set
HCDCNTL	Optional for specifying a list of operating systems, processors, or switches Not applicable for building CONFIGxx member or JES3 inish data set
HCDTRACE	Optional for capturing the trace if trace is activated.

Example 1:

The following example shows a job to build a configuration data set containing processor configuration PROC1 including its CF connections to processor PROC2.

```
//BWINJOB  JOB (3259,RZ-28),'BWIN',NOTIFY=BWIN,CLASS=A,
//             MSGCLASS=Q,MSGLEVEL=(1,1),REGION=4M
//*
//* BUILD Processor configuration statement
//*
//BUILD  EXEC PGM=CBDMGHCP,PARM='CONFIG,PR,*'
//HCDIODFS DD   DSN=BWIN.IODF03,DISP=SHR
//HCDDECK  DD   DSN=BWIN.IODF.03.DECKS(PROC1),DISP=SHR
//HCDMLOG  DD   DSN=BWIN.HCD.LOG,DISP=OLD
//HCDCNTL  DD   *
PROC1
PROC2,CF
/*
//
```

Example 2:

The following example shows a job to update CONFIG03 in data set SYS1.PARMLIB from processor configuration PROC1, partition LPAR1 and OS configuration MVS1 while saving the existing member under the name CONFBK03.

```
//BWINJOB  JOB (3259,RZ-28),'BWIN',NOTIFY=BWIN,CLASS=A,
//             MSGCLASS=Q,MSGLEVEL=(1,1),REGION=4M
//*
//* BUILD CONFIGxx
//*
//BUILD  EXEC PGM=CBDMGHCP,PARM='CONFIG,XX,03,PROC1,LPAR1,MVS1,U,CONFBK03'
//HCDIODFS DD   DSN=BWIN.IODF03,DISP=SHR
//HCDDECK  DD   DSN=SYS1.PARMLIB,DISP=SHR
//HCDMLOG  DD   DSN=BWIN.HCD.LOG,DISP=OLD
/*
//
```

Copy IODF

This utility function copies the content of the IODF, addressed by DD name HCDIODFS, into another data set, addressed by DD name HCDIODFT. If the IODF has an associated activity log, that log is also copied. Likewise, if an HCM master configuration file (MCF) is associated to the IODF, it is also copied along with the IODF. However, a change log file (CHLOG), if available, is not copied. If the target IODF is the active IODF (used for IPL and holding the active processor configuration) the IODF will not be replaced and copy IODF will be rejected.

This function is invoked by passing the following parameter string.

Copy an IODF

```
►►─ COPYIODF ─►◄
```

Note:

1. The target data set must be large enough to hold the source IODF.
2. The target IODF can be created by defining a VSAM DIV file and by initializing it using the utility ***Initialize IODF*** (described in "Initialize IODF" on page 291).
3. Both data sets must be valid IODFs.
4. If you copy an IODF which is enabled for multi-user access, this property is not inherited by an existing target IODF. However, a target IODF defined with the multi-user access property will always preserve this property, independent from the source IODF.

Batch invocation

A data set must be allocated to the following DD names when invoking the batch utility.

DD name	Description
HCDIODFS	Source IODF
HCDIODFT	Target IODF
HCDMLOG	HCD Message Log data set
HCDTRACE	Trace data set (if trace is activated)

For an example see the batch job in "Batch IODF copy example" on page 317.

Print configuration reports

This HCD batch utility function allows you to print reports about:

- The hardware definitions stored in the specified IODF.
- The I/O paths of an actual system compared to the definitions in the IODF.
- The processors, control units, and devices supported in your installation.

This function is invoked by passing the following parameter string.

Print a configuration report

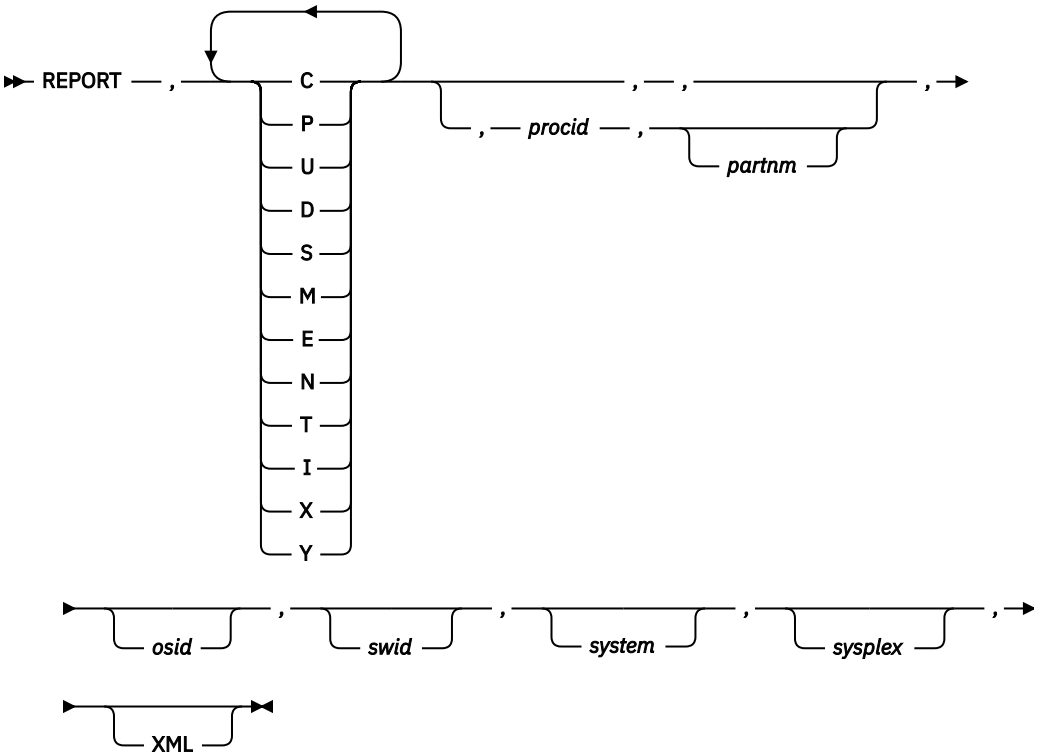

C | P | U | D | S | M | E | N | T | I | X | Y
Type of the report. Specify one or more of the following codes in any order, with no separating characters:

C
CSS report - CSS summary report

P
CSS report - channel path detail report

U
CSS report - control unit detail report

D
CSS report - device detail report

S
Switch report

M
OS report - OS devices

E
OS report - EDTs

N
OS report - NIP/VM consoles

T
CTC report

I
I/O Path report

X
Supported hardware report

Y
I/O definition reference

procid
Processor ID to limit a CSS, CTC connection or I/O Path report to a specific processor. If not specified for an I/O Path report, the ID of the active processor configuration is taken (=default).

partnm
Partition name to limit a CSS, CTC connection or I/O Path report to a specific logical partition. The processor ID must also be specified; otherwise, the partition name is ignored for the CSS and CTC connection report. For the I/O Path report, the partition name is defaulted to a partition that contains a device common to the specified or defaulted OS configuration.

osid
Operating system configuration ID to limit an OS report or an I/O Path report to a specific operating system configuration. If not specified for an I/O Path report, the ID of the active operating system configuration is taken (=default).

swid
Switch identifier to limit a Switch report to a specific switch

system
If the sysplex name is also specified, the system name (1 - 8 alphanumeric characters) identifies the system of a sysplex for that the I/O Path report is to be generated. If the sysplex is not specified, the system name is the VTAM application name of the host for that the I/O Path report is to be generated. The default is the local system.

sysplex
Sysplex name (1 - 8 alphanumeric characters) to specify the sysplex of the system for which the I/O Path report is to be generated. If the I/O path uses zDAC, the sysplex must be the local syplex or left blank.

XML
Specify the XML keyword if you want to print your report in XML output format.

Note: It is recommended to print the I/O Path report separately from the other reports. However, if you want to print an I/O Path report together with any other reports, your limitations for the I/O Path report are propagated to all other specified reports. These limitations to a certain processor, partition or operating system can be either user-specified or HCD takes the active processor, partition or operating system as the default.

Batch invocation

A data set must be allocated to the following DD names when invoking the batch utility.

DD name	Description
STEPLIB	SYS1.SCBDHENU (required for I/O definition reference)
HCDIODFS	Source IODF (not required when printing the supported hardware report, and I/O definition reference)
HCDRPT	Output data set: record size 133, record format fixed block
HCDMLOG	HCD Message Log data set
HCDTRACE	Trace data set (if trace is activated)

Example 1:

```
//BWINJOB   JOB (3259,RZ-28),'BWIN',NOTIFY=BWIN,CLASS=A,
//              MSGCLASS=Q,MSGLEVEL=(1,1),REGION=4M
//*************************************************************
//*  PRINTS A CSS SUMMARY REPORT FOR PARTION PART1 OF PROCESSOR
//*                              PROC1,
//*         A SWITCH REPORT FOR SWITCH 00,
//*         AN OS REPORT FOR DEVICES, EDT AND NIP CONSOLES OF
//*                              OS CONFIGURATION MVS1
//*************************************************************
//REPORT1   EXEC PGM=CBDMGHCP,
//             PARM='REPORT,CSMEN,PROC1,PART1,MVS1,00'
```

```
//HCDIODFS  DD   DSN=BWIN.IODF03.WORK,DISP=SHR
//HCDRPT    DD   SYSOUT=*,DCB=(RECFM=FBA,LRECL=133,BLKSIZE=6650)
//HCDMLOG   DD   DSN=BWIN.HCD.LOG,DISP=OLD
//
```

Example 2:

```
//BWINJOB   JOB (3259,RZ-28),'BWIN',NOTIFY=BWIN,CLASS=A,
//              MSGCLASS=Q,MSGLEVEL=(1,1),REGION=4M
//*************************************************************
//*  PRINTS A SUPPORTED HARDWARE REPORT AND
//*         AN I/O DEFINITION REFERENCE
//*************************************************************
//REPORT2   EXEC PGM=CBDMGHCP,
//               PARM='REPORT,XY'
//STEPLIB   DD   DSN=SYS1.SCBDHENU,DISP=SHR
//HCDRPT    DD   SYSOUT=*,DCB=(RECFM=FBA,LRECL=133,BLKSIZE=6650)
//HCDMLOG   DD   DSN=BWIN.HCD.LOG,DISP=OLD
//
```

Example 3:

```
//BWINJOB   JOB (3259,RZ-28),'BWIN',NOTIFY=BWIN,CLASS=A,
//              MSGCLASS=Q,MSGLEVEL=(1,1),REGION=4M
//*************************************************************
//*  PRINTS AN I/O PATH REPORT OF THE ACTIVE CONFIGURATION
//*  COMPARED TO THE DEFINITIONS IN IODF SYS1.IODF00
//*************************************************************
//REPORT3   EXEC PGM=CBDMGHCP,
//               PARM='REPORT,I'
//HCDIODFS  DD   DSN=SYS1.IODF00,DISP=SHR
//HCDRPT    DD   SYSOUT=*,DCB=(RECFM=FBA,LRECL=133,BLKSIZE=6650)
//HCDMLOG   DD   DSN=BWIN.HCD.LOG,DISP=OLD
//
```

Example 4:

```
//BHEIREP  JOB (DE03243,,RZ-29),'HEISSER',CLASS=A,REGION=4M,
//        MSGLEVEL=(1,1),NOTIFY=BHEI,MSGCLASS=Q
//*****************************************************************
//*EXAMPLE OF A BATCH JOB THAT IS CREATED FROM THE DIALOG AND THAT
//*PRINTS AN I/O PATH REPORT OF THE ACTIVE CONFIGURATION OF THE
//*SYSTEM HCDTST3 COMPARED TO THE DEFINITIONS FOR THE PROCESSOR
//*VMABASIC AND THE OPERATING SYSTEM MVSVM IN BHEI.IODF01.WORK
//*****************************************************************
//REP0    EXEC PROC=CBDJRPTS,
//             RPARM='REPORT,I,VMABASIC,,MVSVM,,HCDTST3,LOCAL'
//             IODF='BHEI.IODF01.WORK'
//
```

Note: For generating the I/O Path Reports which are printed in examples 3 and 4, the system must be capable of running zDAC. If running the I/O path report using zDAC, a report is only possible for a system in the local sysplex, which is capable to perform dynamic activates (token match). The operational data will only be given, if the report is created for the local system.

Create a graphical configuration report

This utility function allows you to produce a graphical representation of the I/O configuration based on the definitions in the IODF.

This function is invoked by passing the following parameter string.

Create a graphical configuration report

```
GRAPHIC ── TYPE= ──►
   ►── CU ──┬──────────────
```

Procid
Processor ID for which the LCU or CHPID report is produced.

Partname
Partition name to limit an LCU or CHPID report to one partition.

OPT
Options of the report. Specify one or more of the following codes in any order, separated by a comma:

EP
Exclude partition

ES
Exclude switch

EC
Exclude CTC control units

SD
Show control unit description (instead of serial number)

EI
Exclude index

DCF
DCF output format

GML
GML output format

Note:

1. If no output format is specified, the specification in the HCD profile is used. If the HCD profile does not specify a formatting type either, the default BookMaster format is used.
2. The output format GDF is not supported in batch mode.

Batch invocation

A data set must be allocated to the following DD names when invoking the batch utility.

DD name	Description
HCDIODFS	Source IODF
HCDRPT	Output data set: record size 200, record format FB. **Note:** This must be a cataloged data set.
HCDMLOG	HCD Message log data set
HCDPROF	HCD profile data set (if profile contains keywords concerning the graphical report)
HCDTRACE	Trace data set (if trace is activated)

Example:

```
//BWINGCR1 JOB (DE3259,,71034-83),'BWIN',NOTIFY=BWIN,CLASS=A,
//             MSGCLASS=Q,MSGLEVEL=(1,1),REGION=4M
//* -------------------------------------------------------
//* Graphical Configuration Report
//* -------------------------------------------------------
//GCREP  EXEC PGM=CBDMGHCP,
//           PARM='GRAPHIC TYPE=CHPID,PROC=TEST3'
//HCDIODFS DD DSN=USER.IODF00.DBR4,DISP=SHR
//HCDRPT   DD DSN=USER.IODF00.DBR4.REPORT,
//            DCB=(RECFM=FBA,LRECL=200,BLKSIZE=6400),
//            SPACE=(TRK,(50,50)),DISP=(NEW,KEEP),UNIT=SYSALLDA
//HCDMLOG  DD DSN=USER.HCD.LOG,DISP=OLD
//HCDPROF  DD DSN=USER.HCD.PROF,DISP=SHR
//
```

Compare IODFs or CSS/OS Reports

This utility function allows you to compare two IODFs and report the differences. You can compare the IODFs from the CSS, OS, and switch perspective.

In addition, you can limit the CSS, OS, and switch perspective by single compare reports, and the CSS perspective by LPARs.

You have to allocate the new IODF with DD name HCDIODFS, and the old IODF with DD name HCDIODFT for comparing IODFs. If you compare the CSS to the OS definition, you always compare within one IODF that must be allocated to HCDIODFS.

You invoke this function by passing the following parameter string.

Note: This parameter string must not exceed 100 characters.

Compare IODFS or CSS/OS Reports

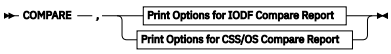

Print Options for IODF Compare Report

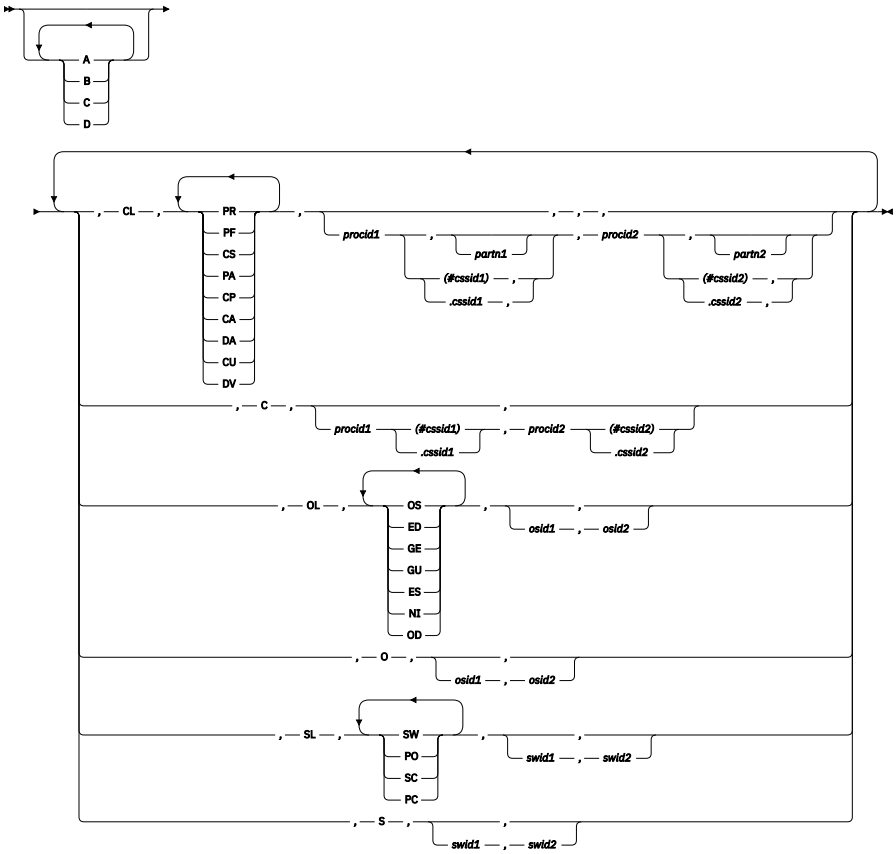

Print Options for CSS/OS Compare Report

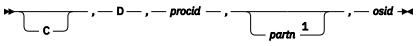

Notes:

[1] Required if processor runs in LPAR mode.

Print options for IODF Compare Report

Specify one or more of the following print options, without separating characters, in exactly this order. For more information about the print option types, see "How to print a Compare IODFs Report" on page 231.

A

Print added data

B
Print deleted data

C
Print unchanged data

D
Print unchanged item IDs

CL | C | OL | O | SL | S
Type of the report. Specify one or more of the following codes in any order, with no separating characters:

CL
Limit the CSS compare report by single compare reports and LPARs

PR
Processor compare

PF
PCIe Function compare

CS
Channel subsystem compare

PA
Partition compare

CP
Channel path compare

CA
Control unit attachment compare

DA
Device attachment compare

CU
Control unit compare

DV
Device compare

procid1
New processor ID

partn1
Partition name of the new processor

cssid1
selected CSS ID of the new XMP processor, either appended by a # and in parenthesis or appended by a dot (.). If the CSS ID is specified for one processor only (old or new), the CSS ID for the other processor is defaulted to CSS ID 0.

procid2
Old processor ID

partn2
Partition name of the old processor

cssid2
selected CSS ID of the old XMP processor, either appended by a # and in parenthesis or appended by a dot (.)

C
Indicates CSS compare report

procid1
New processor ID

cssid1
selected CSS ID of the new XMP processor, either appended by a # and in parenthesis or appended by a dot (.). If the CSS ID is specified for one processor only (old or new), the CSS ID for the other processor is defaulted to CSS ID 0.

procid2
Old processor ID

cssid2
selected CSS ID of the old XMP processor, either appended by a # and in parenthesis or appended by a dot (.)

OL
Limit OS compare report by single compare reports

OS
Operating system compare

ED
EDT compare

GE
Generic compare

GU
Generic update compare

ES
Esoteric compare

NI
OS console compare

OD
OS device compare

osid1
New operating system ID

osid2
Old operating system ID

O
Indicates OS compare report

osid1
New operating system ID

osid2
Old operating system ID

SL
Limit switch compare report by single compare reports

SW
Switch compare

PO
Switch port compare

SC
Switch configuration compare

PC
Port configuration compare

swid1
New switch ID

swid2
Old switch ID

S
Indicates SWITCH compare report

swid1
New switch ID

swid2
Old switch ID

Print options for CSS/OS Compare Report

C
Print all devices. If C is not selected, only devices are printed that are

- Defined for the CSS, but not for the OS
- Defined for the OS, but not for the CSS
- Defined for both, but of different device type

D
Indicates CSS/OS compare

procid
Processor ID

partn
Partition name. This is a required parameter, if the processor runs in LPAR mode. For more information, see "Compare CSS / operating system views" on page 232.

osid
Operating system ID

Batch invocation

A data set must be allocated to the following DD names when invoking the batch utility.

DD name	Description
STEPLIB	SYS1.SCBDHENU (required for OS device compare)
HCDIODFS	New IODF
HCDIODFT	Old IODF (only for IODF compare)
HCDMLOG	HCD Message Log data set
HCDRPT	Report data set; record size 133, record format fixed block
HCDTRACE	Trace data set (if trace is activated)

Example 1:

The following example shows a job to ***compare two IODFs***.

```
//BWINJOB  JOB (3259,RZ-28),'BWIN',NOTIFY=BWIN,CLASS=A,
//             MSGCLASS=Q,MSGLEVEL=(1,1),REGION=4M
//*
//* COMPARE IODFs WITH ADDED AND DELETED DATA
//* DEVICE, DEVICE ATTACHMENT AND OS DEVICE COMPARE
//* LIMITED TO LPAR PROC2.LPAR1 ON BOTH AND OS PROD17
//*
//COMPARE1 EXEC PGM=CBDMGHCP,
//            PARM='COMPARE,AB,CL,DVDA,PROC2,LPAR1,PROC2,LPAR1,
//            OL,PROD17,PROD17'
//STEPLIB  DD   DSN=SYS1.SCBDHENU,DISP=SHR
//HCDIODFS DD   DSN=BWIN.IODF06.WORK,DISP=SHR
//HCDIODFT DD   DSN=BWIN.IODF03,DISP=SHR
//HCDRPT   DD   SYSOUT=*,DCB=(RECFM=FBA,LRECL=133,BLKSIZE=6650)
//HCDMLOG  DD   DSN=BWIN.HCD.LOG,DISP=OLD
//
```

Example 2:

The following example shows a job to ***compare CSS/OS reports***.

```
//BWINJOB  JOB (3259,RZ-28),'BWIN',NOTIFY=BWIN,CLASS=A,
//             MSGCLASS=Q,MSGLEVEL=(1,1),REGION=4M
//*
//* COMPARE CSS/OS CONFIGURATION BETWEEN
//* DEVICES CONNECTED TO PROC1, PART1 ON CSS SIDE
//*         DEFINED TO OS MVS1
//*
//COMPARE2 EXEC PGM=CBDMGHCP,
//            PARM='COMPARE,AB,D,PROC1,PART1,MVS1'
//HCDIODFS DD   DSN=BWIN.IODF06.WORK,DISP=SHR
//HCDRPT   DD   SYSOUT=*,DCB=(RECFM=FBA,LRECL=133,BLKSIZE=6650)
//HCDMLOG  DD   DSN=BWIN.HCD.LOG,DISP=OLD
//
```

Import an IODF

This utility function allows you to import configuration data (previously exported from another system) into an IODF. It is assumed that the mentioned configuration data has been received outside HCD, for example, using the TSO RECEIVE command, and stored in a sequential data set.

The data set containing IODF data to be imported has to be specified with DD name HCDIN.

This function is invoked by passing the following parameter string.

Import an IODF

```
►► IMPORT ── , ── IODF name ── , ┬──────────────┬ , ┬──────────────┬ ►◄
                                 └─ volume ─────┘   └─ REPLACE ────┘
```

IODF name
Specifies the name of the target IODF (fully qualified).

volume
Specifies the volume serial number of the IODF destination. This parameter is neglected if the target IODF already exists and REPLACE is specified, or, if the data set is SMS managed.

REPLACE
Specifies that an IODF with the same name will be replaced by the received IODF. If REPLACE is not specified, the IODF is not replaced.

Batch invocation

A data set must be allocated to the following DD names when invoking the batch utility.

DD name	Description
HCDIN	The data set containing IODF data to be imported
HCDMLOG	HCD Message Log data set
HCDTRACE	Trace data set (if trace is activated)

Example:

```
//BWINJOB  JOB (3259,RZ-28),'BWIN',NOTIFY=BWIN,CLASS=A,
//             MSGCLASS=Q,MSGLEVEL=(1,1),REGION=4M
//*
//* IMPORT AN IODF
//*
//IMPORT   EXEC PGM=CBDMGHCP,
//            PARM='IMPORT,BWIN.IODF08,DATA04'
//HCDIN    DD   DSN=BWIN.EXPORTED.IODF03,DISP=SHR
//HCDMLOG  DD   DSN=BWIN.HCD.LOG,DISP=OLD
//
```

Export an IODF

This utility function allows you to send an IODF to another system.

You have to preallocate the IODF you want to export with DD name HCDIODFS.

If you want to send an IODF to an unattended z/OS system, you have to allocate a data set with DD name HCDCNTL. From this data set, HCD extracts information to set up the JCL to run on the unattended target system. You have to modify or adapt the JOB statement, JES routing statement(s), and JOBLIB information in this data set before you call the export utility.

This function needs to be executed in an TSO environment, for example, by invoking HCD under control of the TSO terminal monitor program IKJEFT01.

This function is invoked by passing the following parameter string.

Export an IODF

```
►► EXPORT ── , ── user id ── , ┬──────────┬ , ┬──────────┬ , ┬──────────┬ ►
                               └ node id  ┘   └ IODF name ┘   └ volume   ┘

► , ┬──────────┬ , ┬──────────┬ ►◄
    └ ACTLOG   ┘   └ NOREPLACE ┘
```

userid
Specifies the user ID of the target, or a nickname (nickname only if the IODF is not sent to an unattended z/OS system).

node id
Specifies the node ID of the target system, but only if the IODF is not sent to an unattended target system (otherwise it is ignored in favor of information provided by the JCL).

IODF name
Specifies the name of the target IODF. Default is the name of the source IODF prefixed with the specified target user ID. This parameter is only applicable if the IODF is sent to an unattended z/OS system, otherwise it is ignored.

volume
Specifies the volume serial number of the DASD on which the target IODF is created if it does not exist. This parameter is only applicable if the IODF is sent to an unattended z/OS system, and the IODF data set is not managed by SMS, otherwise it is ignored.

ACTLOG
Specifies that the appropriate Activity Log file should also be sent. If this parameter is missing, or the target is an unattended MVS system, it is not sent.

NOREPLACE
For unattended exports, this keyword provides overwrite protection for an IODF at the target system with the same name as the IODF to be exported.

Batch invocation

A data set must be allocated to the following DD names when invoking the batch utility.

DD name	Description
HCDIODFS	IODF to be exported
HCDCNTL	JCL data set containing the JOB statement, the JES routing statement(s) and the JOBLIB information for sending the IODF to an unattended z/OS system.
SYSTSPRT	Print data set
SYSTSIN	SYSIN data set

DD name	Description
HCDMLOG	HCD Message Log data set
HCDTRACE	Trace data set (if trace is activated)

You can also find the following examples in the data set SYS1.SAMPLIB.

Example 1:

The following example shows a job to export an IODF to an attended system.

```
//BWINEX1 JOB (3259,7030-83),'BWIN',CLASS=A,USER=BWIN,
//        MSGLEVEL=(1,1),NOTIFY=BWIN,MSGCLASS=Q,REGION=4M
/*
//EXPORT1 EXEC PGM=IKJEFT01
//SYSPRINT DD SYSOUT=*
//HCDIODFS DD DSN=BWIN.IODF52.WORK,DISP=SHR
//HCDMLOG  DD DSN=BWIN.HCD.LOG,DISP=OLD
//SYSTSPRT DD SYSOUT=*
//SYSTSIN  DD *
     CALL 'SYS1.LINKLIB(CBDMGHCP)',      +
     'EXPORT,BMGN,BOETST1'
/*
//
```

Example 2:

The following example shows a job to export an IODF to an unattended z/OS system.

```
//BWINEX2 JOB (3259,7030-83),'BWIN',CLASS=A,USER=BWIN,
//        MSGLEVEL=(1,1),NOTIFY=BWIN,MSGCLASS=Q,REGION=4M
//*************************************************************
//* MODIFY AND ADAPT DATA SET ALLOCATED WITH DDNAME HCDCNTL
//* BEFORE YOU SUBMIT THIS JOB.
//*   USE HCDCNTL2 FOR A JES2 SYSTEM
//*   USE HCDCNTL3 FOR A JES3 SYSTEM
//*************************************************************
//EXPORT1 EXEC PGM=IKJEFT01
//SYSPRINT DD SYSOUT=*
//HCDIODFS DD DSN=BWIN.IODF52.WORK,DISP=SHR
//HCDMLOG  DD DSN=BWIN.HCD.LOG,DISP=OLD
//HCDCNTL  DD DSN=SYS1.SAMPLIB(HCDCNTL2),DISP=SHR
//SYSTSPRT DD SYSOUT=*
//SYSTSIN  DD *
      CALL 'SYS1.LINKLIB(CBDMGHCP)',      +
      'EXPORT,BMGN,,BMGN.IODF11.WORK,DATA05'
/*
//
```

Example 2.1:

The following example shows the JCL statements that may be specified in a data set allocated with DD name HCDCNTL for a JES3 system.

```
//BWINEX1 JOB (3259,7030-83),'BWIN',CLASS=A,NOTIFY=BWIN,
//            MSGCLASS=Q,MSGLEVEL=(1,1),REGION=4M
//*
//* JCL STATEMENTS SPECIFIED WITH DDNAME HCDCNTL
//*
//*ROUTE  XEQ  BOETST1
//BBMGNIM NJB (3259,7030-83),'BMGN',CLASS=A,
//            MSGCLASS=Q,MSGLEVEL=(1,1),REGION=4M,
//            USER=BMGN,PASSWORD=password
//OUT1    OUTPUT JESDS=ALL,DEFAULT=YES,DEST=BOEVS01.BWIN
//
```

Example 2.2:

The following example shows the JCL statements that may be specified in a data set allocated with DD name HCDCNTL for a JES2 system.

```
//BMGNIM  JOB (3259,7030-83),'BMGN',CLASS=A,
//            MSGCLASS=Q,MSGLEVEL=(1,1),REGION=4M,
```

```
//            USER=BMGN,PASSWORD=password
/*ROUTE  XEQ  BOETST1
//
```

Note: You can replace the /*ROUTE statement by the /*XMIT statement.

```
/*XMIT XEQ BOETST1 DLM=xx
```

When you use the DLM parameter with the /*XMIT statement, you specify a two-character delimiter to terminate the data being transmitted. (For the end of the records to be transmitted, the default is /* in the input stream.)

Batch IODF copy example

You may want to use the batch initialize and copy IODF functions when performing system maintenance. For example, these functions can be used when copying all the data sets from one volume (that contains IODFs) to another volume.

The following sample jobs show how to copy multiple IODFs to an alternate volume. In the example it is assumed that the following IODFs exist: SYS1.IODF00 and SYS1.IODF03. The first sample job allocates corresponding data sets on volume DATA02. The second sample job initializes these data sets into IODFs, and copies the source IODFs into the newly created IODFs. Jobs similar to these are contained in member CBDSALIO and CBDSCPIO in SYS1.SAMPLIB.

```
//* JOB TO DEFINE IODF
//DEFIODF JOB REGION=4M,...
//*
//* DEFINE NEW IODF DATASETS SYS2.IODF00, SYS2.IODF03
//*
//ALLOC    EXEC PGM=IDCAMS
//SYSPRINT DD   SYSOUT=*
//SYSIN    DD   *

     DEFINE CLUSTER (NAME (SYS2.IODF00.CLUSTER) -
                     LINEAR                     -
                     RECORDS (1024)             -
                     VOLUMES(DATA02)            -
                     )                          -
            DATA (NAME (SYS2.IODF00))

     DEFINE CLUSTER (NAME (SYS2.IODF03.CLUSTER) -
                     LINEAR                     -
                     RECORDS (1024)             -
                     VOLUMES(DATA02)            -
                     )                          -
            DATA (NAME (SYS2.IODF03))

//* JOB TO COPY IODF
//INITIODF JOB REGION=4M,...
//*
//* INITIALIZE AND COPY SYS1.IODF00 to SYS2.IODF00
//*
//INIT1    EXEC PGM=CBDMGHCP,PARM='INITIODF SIZE=1024,ACTLOG=NO'
//HCDCNTL  DD *
This IODF is a copy of SYS1.IODF00
/*
//HCDIODFT DD   DSN=SYS2.IODF00,DISP=OLD
//HCDMLOG  DD   SYSOUT=*,DCB=(RECFM=FBA,LRECL=133,BLKSIZE=6650)
//*
//COPY1    EXEC PGM=CBDMGHCP,PARM='COPYIODF'
//HCDIODFS DD   DSN=SYS1.IODF00,DISP=SHR
//HCDIODFT DD   DSN=SYS2.IODF00,DISP=OLD
//HCDMLOG  DD   SYSOUT=*,DCB=(RECFM=FBA,LRECL=133,BLKSIZE=6650)
//*
//* INITIALIZE AND COPY SYS1.IODF03 to SYS2.IODF03
//*
//INIT2    EXEC PGM=CBDMGHCP,PARM='INITIODF SIZE=1024,ACTLOG=NO'
//HCDCNTL  DD *
This IODF is a copy of SYS1.IODF03
/*
//HCDIODFT DD   DSN=SYS2.IODF03,DISP=OLD
//HCDMLOG  DD   SYSOUT=*,DCB=(RECFM=FBA,LRECL=133,BLKSIZE=6650)
//*
//COPY2    EXEC PGM=CBDMGHCP,PARM='COPYIODF'
```

```
//HCDIODFS DD   DSN=SYS1.IODF03,DISP=SHR
//HCDIODFT DD   DSN=SYS2.IODF03,DISP=OLD
//HCDMLOG  DD   SYSOUT=*,DCB=(RECFM=FBA,LRECL=133,BLKSIZE=6650)
//
```

Note:

1. This batch job issues job message IEC161I, which can be ignored.
2. The VSAM DIV file consists of a data and a cluster file. According to the naming convention, the name of the data file is the IODF name (in this example SYS1.IODF01), and .CLUSTER is appended to the data file for a cluster file. Append .CLUSTER to the IODF name in the DEFINE CLUSTER statement (in this example SYS1.IODF01.CLUSTER).

When designating the number of records to be allocated in an IODF (specified on the DEFINE CLUSTER statement and as a PARM value on the INITIODF job step), it is important that the target IODF be allocated at least as big as the source IODF. While using the HCD dialog, you can use the SHOWIODF command from the command line, or the View action bar choice to display the number of records allocated in the source IODF.

Note: Remember to also copy the associated LOADxx members. For information on the LOADxx members, see *z/OS MVS Initialization and Tuning Reference* and *z/OS MVS Initialization and Tuning Guide*.

List of standard DD names

Standard DD names are used in the job control statements that define the data sets used by HCD. These names are shown in Table 21 on page 318. If you want to change these names, you must create a list of alternate DD names, using the standard format for such a list.

Table 21. Standard DD names Used by HCD

	DD name	HCD Task	Data Set Contents
1	not used		
2	not used		
3	not used		
4	HCDLIB	Migration	Assembler macro library
5	HCDIN	Migration	Migration input
6	HCDPRINT	Migration	Migration log (messages)
7	not used		
8	HCDUT1	Migration	Assembler work file
9	HCDUT2	Migration Activity Log	Modified IOCP, MVSCP, and HCPRIO input to assembler Target activity log during copy
10	HCDUT3	Migration	Assembler output (object) data
11	not used		
12	HCDTERM	Migration	Assembler and loader messages
13	not used		
14	not used		
15	not used		
16	not used		

Table 21. Standard DD names Used by HCD (continued)			
	DD name	**HCD Task**	**Data Set Contents**
17	HCDRPT	Query/print	HCD reports
18	HCDALOG	All	Activity log
19	HCDJES3	All	JES3 initialization stream checker data
20	HCDASMP	Migration	Assembler output listing
21	HCDDECK	Activation	IOCP and HCPRIO input data set (output)
22	HCDIODFP	All	First IODF
23	HCDIODFS	Maintain IODF	Source IODF (for COPY, for example)
24	HCDIODFT	Maintain IODF	Target IODF
25	HCDPROF	Tailor HCD defaults	HCD profile definitions
26	HCDMLOG	All	Message log
27	HCDTRACE	All	Trace data set (if trace is activated)
28	HCDCNTL	Activation Maintain IODF HMC-wide activation	Control file for Build IOCDS Control file for Build IOCP input data set JCL data set for Import/Export IODF IODF description List of configurations for Build I/O configuration data TCP/IP connection table

List of alternate DD names

If used, this optional list, must start on a halfword boundary that is not also a fullword boundary.

- The first two bytes must contain a binary count of the number of bytes in the rest of the list.
- The rest of the list specifies alternate DD names that you wish to use in place of the standard DD names.
  - DD names in the alternate list must appear in the same sequence as they appear in the standard list.
  - Each name must be eight characters long. If a name contains fewer than eight characters, pad it with blanks. If you omit an alternate DD name, set that entry in the alternate DD names list to binary 0.
  - Entries in the alternate DD names list that correspond to empty entries in the standard DD names list must be set to binary 0.

End of Programming Interface information

Chapter 14. Security and other considerations

This information unit discusses the following topics:

- Security-related considerations
- Catalog-related considerations
- Considerations concerning data sets cataloged with an esoteric device group name
- SMS-related considerations
- ISPF and TSO/E aspects that you need to consider
- z/VM-related considerations

Security-related considerations

An appropriate resource-level security facility, such as Resource Access Control Facility (RACF*) 1.9 or an equivalent security product, is required to control access to the data sets used by HCD. You perform the access control in two steps:

1. Define the necessary RACF profiles
2. Give users access authority

Note: If no security product is installed, you cannot perform the ***activate*** function from HCD.

Defining RACF profiles

You define three types of profiles:

1. Data Set Profiles

   Define data set profiles for all data sets used by HCD.

2. OPERCMDS Class Profile:

   Define the profile MVS.ACTIVATE to invoke the dynamic reconfiguration function under HCD, to use the MVS operator command ACTIVATE from an MVS console, or to use the HCD I/O Autoconfiguration functionality. For a description of the command syntax, see *z/OS MVS System Commands*. For a description of I/O Autoconfiguration, see Chapter 8, “How to work with I/O Autoconfiguration,” on page 159.

   If you issue the ACTIVATE command, the I/O supervisor calls jobname IEASYSAS stepname IOSAS to assist in the activate procedure. IOSAS requires read access to the IODF data sets. Because the default entry for IOSAS in the Program Properties Table (PPT) is PASS, RACF checking occurs. ICH408I is the result of an ACTIVATE IODF=XX command. To ensure the successful completion of the activate process, you have to choose one of the following alternatives:

   - Place the IOSAS task into the RACF started task table (ICHRIN03) and indicate that the user is authorized.
   - Define the IODF data sets to RACF with UACC=READ.
   - Add IOSAS as an entry in the Started Procedures Table with a valid user ID. This user ID must have read access to the SYS1.NUCLEUS and the IODF data sets.

   The ACTIVATE command needs UPDATE access, regardless whether the TEST option is specified or not.

   You also have to define the profile MVS.DISPLAY.IOS with read access if you wish to work from the sysplex member list to view the active configuration status or to process a CONFIGxx member.

3. FACILITY Class Profiles:

   Define the following profiles:

© Copyright IBM Corp. 1994, 2022

- CBD.CPC.IPLPARM to query and update the IPLADDR and IPLPARM attribute values of the last IPL, and to be used for next IPL.
- CBD.CPC.IOCDS to query and update IOCDS control information.
- CBD.CPC.ACTIVATE.netid.nau to protect the hardware only dynamic activation function. Netid and nau refer to the SNA name of the processor where you want to perform the hardware only activation.

To enable users to work with CPC images (see "Activate a configuration HMC-wide" on page 203), you need to define the following profile:

- HWI.TARGET.network.cpcname.* - using the BCPii community name specified with APPLDATA('community_name'). This community name must be defined on the support element of each CPC that is queried.

See also "Access to HWI.* profiles" on page 324.

Giving users access authority

The access authority you can give to a user depends on the profile.

Access to data set profiles

You can give READ, UPDATE, or ALTER access to IODFs in general or to a specific IODF.

Access to profile MVS.ACTIVATE

You must give UPDATE access to allow the user to activate a configuration change or to use the I/O Autoconfiguration function.

You can give READ access if you want to restrict the ***activate*** function to the test option.

Access to profile CBD.CPC.IPLPARM

NONE
Indicated that the user is not allowed to query or change the IPLADDR and IPLPARM attribute values. This is also the case if profile CBD.CPC.IOCDS is not defined or RACF is not installed,

READ
Allows the user to query the IPLADDR and IPLPARM attribute values; however changing the IPLADDR and IPLPARM attribute values is not allowed.

UPDATE
Allows the user to update the IPLADDR and IPLPARM attribute values.

Table 22 on page 322 shows the relationship between HCD IPL attribute management functions and the CBD.CPC.IPLPARM access authority. Option 2.11 refers to option 2 on the ***Primary Task Selection*** panel and option 11 on the resulting panel.

Table 22. CBD.CPC.IPLPARM access authority and HCD IPL attribute management functions

Option	HCD IPL Attribute Management Functions	RACF Authority
2.11	List processor cluster	READ (or READ authority in CBD.CPC.IOCDS)
2.11	View IPL attributes	READ
2.11	Update NEXT IPL attributes	UPDATE

Access to profile CBD.CPC.IOCDS

If profile CBD.CPC.IOCDS is not defined or RACF is not installed, the local IOCDS functions (that is for processors with no SNA address specified) work as before, that is, the operator will be requested to approve the write-IOCDS request.

The new remote IOCDS functions (that is for processors with an SNA address specified) require RACF authorization.

NONE
The user is not allowed to query or change IOCDS control information, or to write an IOCDS (neither by HCD nor IOCP).

READ
Allows the user to query IOCDS control information. Changing IOCDS control information or writing an IOCDS is not allowed (neither by HCD nor IOCP).

UPDATE
Allows the user to write IOCDSs (by HCD or IOCP), or to change and view IOCDS control information. If profile CBD.CPC.IOCDS is defined, then the operator will not be requested to approve the writing of an IOCDS. (That is, only users with update access to profile CBD.CPC.IOCDS are allowed to write an IOCDS.)

Table 23 on page 323 shows the relationship between IOCDS management functions and the CBD.CPC.IOCDS access authority. The first column in the table refers to the options you have to select to get to the HCD functions, that is, you start with option 2 on the primary selection panel and select options 2, 6, or 11 on the resulting panel.

Table 23. CBD.CPC.IOCDS access authority and HCD IOCDS management functions

Option	HCD IOCDS Management Functions	RACF Authority
2.11	List processor cluster	READ (or READ authority in CBD.CPC.IPLPARM)
2.11	View IOCDS control information	READ
2.11	Update IOCDS control information (switch IOCDS, enable or disable write protection)	UPDATE
2.2 **or** **2.6**	Build IOCDS (SNA address not defined for processor ***or*** batch IOCP job runs on SP 4.3 system)	UPDATE [1] or Profile not defined to RACF [2]
2.2 **or** **2.6** **or** **2.11**	Build IOCDS (SNA address defined for processor ***and*** batch IOCP job runs on SP 5.1 system)	UPDATE [1]
--	Direct invocation of IOCP	UPDATE [1] or Profile not defined to RACF [2]

Note:

[1] The build IOCDS function does not require authorization by the system operator, that is, no WTOR message is written.

[2] A WTOR message will be issued to the operator to authorize the build IOCDS function.

For more information on security considerations for IOCDS management, refer to the *IOCP User's Guide*.

Access to profile CBD.CPC.ACTIVATE.netid.nau

You need access to these profiles for hardware only activates. The following access is needed:

NONE
Indicates that the user is not authorized for any hardware only activate activity.

READ
Allows a user to display the current activation information from the remote processor and to download the activate I/O configuration from that processor, if available.

UPDATE
Allows the user to perform all hardware only actions on the remote processor, including activating a new I/O configuration.

Access to HWI.* profiles

To enable users to work with CPC images as described in "Activate a configuration HMC-wide" on page 203, define access rights as follows:

- As the profile HWI.APPLNAME.HWISERV in the FACILITY class of the security product controls which applications can use BCPii services, the security administrator must give at least READ access to this resource.
- READ access is required for users of any specific CPC resource HWI.TARGET.network.cpcname.* in the FACILITY class of the security product.

For more information, refer to *z/OS MVS Programming: Callable Services for High-Level Languages* .

How to set up PassTickets for working with CPC images on z/OS

If you do not provide a password in the connection table for the remote systems, HCD uses a PassTickets for verifying the authorization for the user ID on this remote system. To allow this, your z/OS security product must support creating PassTicketss(R_GenSec) and their evaluation through the SAF interfaces. If you are using a security product other than z/OS IBM Security Server (RACF), check with your vendor. How to configure PassTickets depends on your external security manager. The following samples show how to define PassTickets with RACF.

To configure PassTickets support for HCD to work with CPC images, you must provide the corresponding RACF definitions on both the managing system and on the affected target systems.

If you do not provide a password in the connection table for the remote systems, HCD uses a PassTickets for verifying the authorization for the user ID on this remote system. To configure PassTickets support for HCD to work with CPC images, you must provide the corresponding RACF definitions on both the managing system and on the affected target systems.

For more information about PassTickets, see *z/OS Security Server RACF Secutiry Administrator's Guide*.

A PassTickets is validated against a RACF profile name. The RACF profile name for the HCD dispatcher is CBDSERVE. You need to perform the following steps on both the managing and the target system, except of ***Step 3***.

Step 1:

Before creating the necessary application profile, the RACF class PTKTDATA must be activated, if not already done:

Security Server (RACF) Example 1

```
SETROPTS CLASSACT(PTKTDATA)
SETROPTS RACLIST(PTKTDATA)
```

Step 2:

Then define a profile for the HCD dispatcher (CBDSERVE) with an associated PassTicket key. The key must be the same on both the system on which the PassTickets is to be generated (the HCD client system) and on the system on which the PassTickets is to be verified (the remote system).

Security Server (RACF) Example 2

```
RDEFINE PTKTDATA CBDSERVE SSIGNON(KEYENCRYPTED(0123456789ABCDEF)))
```

An enhanced PassTicket example would look something like this:

```
RDEFINE PTKTDATA CBDSERVE SSIGNON(EPTKEYLABEL(CBD.PT.KEY))
```

For more information, see the , RALTER (Alter general resource profile), RDEFINE (Define general resource profile) in the *z/OS Security Server RACF Command Language Reference* and Using PassTickets in the *z/OS Security Server RACF Systems Administrator's Guide*.

Step 3: (on the managing system only)

The user calling the HCD dispatcher must have RACF permissions in order to generate PassTickets. Define a profile in the PTKTDATA class controlling access to the PassTickets services and set the universal access authority to NONE:

Security Server (RACF) Example 3

```
RDEFINE PTKTDATA IRRPTAUTH.CBDSERVE.*    UACC(NONE)  <-- all user IDs
RDEFINE PTKTDATA IRRPTAUTH.CBDSERVE.DOCU UACC(NONE)  <-- a specific user ID
```

To generate PassTickets, all intended user IDs connecting to CBDSERVE need update permission to the newly created profile:

Security Server (RACF) Example 4

```
PERMIT IRRPTAUTH.CBDSERVE.DOCU CLASS(PTKTDATA) ID(<user>) ACCESS(UPDATE)
```

where *<user>* is the user ID connecting to the HCD dispatcher CBDSERVE.

Step 4:

Finally you must activate the changes:

Security Server (RACF) Example 5

```
SETROPTS RACLIST(PTKTDATA) REFRESH
```

How to set up PassTickets for working with CPC images on z/VM

PassTickets are supported as an authentication method with z/VM 5.4 or later. The setup for using PassTickets on a remote z/VM system requires the same RACF configuration steps as for a z/OS remote system. Since the HCD dispatcher for z/VM uses the RACROUTE macro, the configuration steps described in *z/VM Security Server RACROUTE Macro Reference* are also required.

Providing additional security for devices

If your system has stringent security requirements and includes Resource Access Control Facility (RACF), you can ensure that only certain programs can allocate unit record, communication, or graphics devices. These programs include Print Services Facility (PSF) for printers, Advanced Communication Facility/Virtual Telecommunications Access Method (ACF/VTAM) for communication or graphics devices, and JES2 or JES3 for unit record, communication, or graphics devices.

When a user attempts to allocate a device, the system uses SAF (the system authorization facility) to issue an authorization check. If RACF is installed, it checks a profile in the DEVICES class to determine whether the user can access the device. If the user does not have authority to access the device, the allocation fails. (Note that the system does not retry an allocation request that fails because the user is not authorized to access the device.)

Work with your RACF security administrator to set up profiles in the DEVICES class:

1. Determine your exact security requirements. Consider questions such as these:
   - Are there some devices that only a few users can use?
   - Are there some devices that all users can use?
   - Do some devices share the same security requirements?
2. Work with your RACF security administrator to assign profile names for the devices to be protected. Assign a discrete profile name to each device that has a unique security requirement. Assign a generic profile name to each device group that shares security requirements. For devices, RACF profile names include the following information:

   sysid
   This is the system identifier, which is defined on the SYSNAME keyword in the IEASYSxx member of SYS1.PARMLIB.

   Note: The system identifier is necessary only if different devices with the same device class, unit name, and device address can be attached to multiple systems and they have different security requirements. In most cases, you should specify an asterisk (*) for this qualifier.

   device-class
   This can be one of the following UCB device classes:

   TP
   Teleprocessing or communications devices

   UR
   Unit record devices

   GRAPHIC
   Graphic devices. These device classes are consistent with the class names used on the DISPLAY U operator command.

   unit-name
   This is a generic name (such as 3800) that identifies the device or devices.

For more details, see *z/OS Security Server RACF Security Administrator's Guide*.

Catalog considerations

One IODF can contain configuration data mirroring multiple processor or logical partition system images, but being a VSAM data set, it can be cataloged in only one catalog. Therefore, if you wish to share an IODF data set among multiple systems and each system is using a separate master catalog, you must define (in the master catalog of each system) an alias that relates to the user catalog on the DASD that is shared among the systems. Define aliases and the user catalog *before* using HCD to define IODF data sets. Figure 257 on page 327 shows the recommended IODF catalog structure for IODFs.

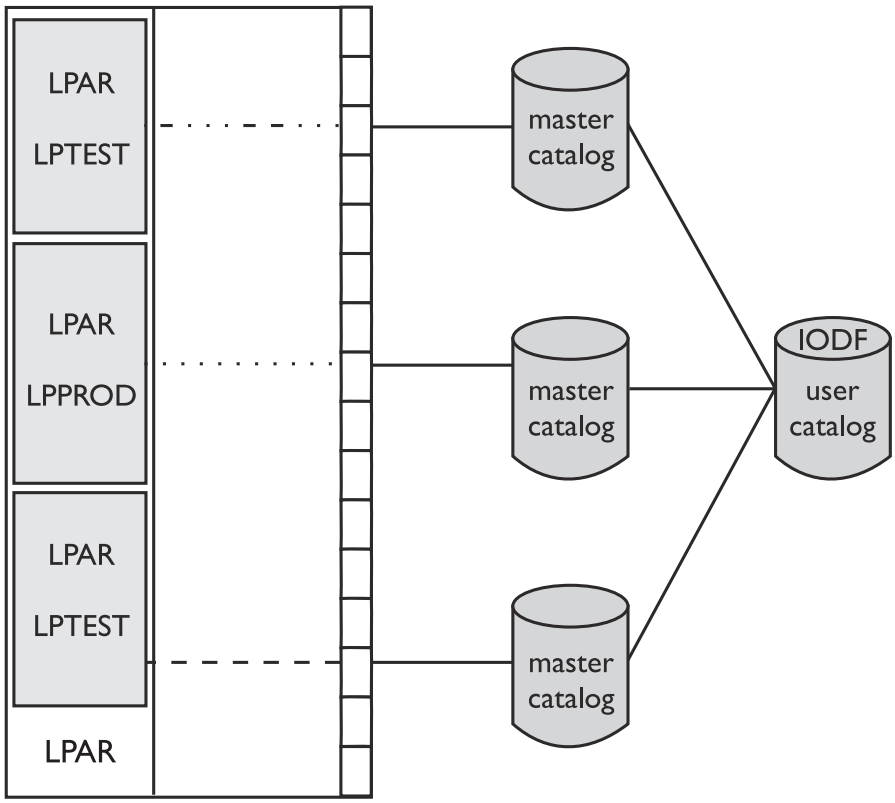

Figure 257. Recommended IODF catalog structure

Note: It is useful to catalog the IODF in a user catalog which resides on the same volume as the IODF. That way if the volume fails and must be restored, the catalog/IODF connection is always preserved across the restore. The catalog is used to reference the IODF during HCD definition activities and during dynamic I/O reconfiguration, *not* during IPL.

Data sets cataloged with an esoteric device group name

When using HCD, data sets that were previously cataloged with an esoteric device group name (for example, SYSDA) by use of the DEFINE NONVSAM or IMPORT CONNECT command of the Integrated Catalog Facility, can cause unpredictable results if such a data set is accessed through the catalog. The reason is that the catalog entry contains the EDT-index pointing to the esoteric. The order of the esoteric in the EDT is no longer determined by the order in which the esoterics are defined, because HCD arranges the esoterics alphabetically.

To avoid this problem, you can do one of the following:

- Specify a token for the esoterics.

  The esoteric token is used by allocation to find the appropriate esoteric for a data set that has been cataloged using the esoteric. You no longer have to maintain a chronological order and may delete and add esoterics without getting access problems for data sets that are cataloged using esoterics. Tokens for system built esoterics (for example, SYSALLDA) are generated by allocation and always have the same value (for SYSALLDA 9999 decimal, for example). You cannot control the token for system built esoterics. To circumvent the problem, define a new user esoteric with a token that corresponds to the EDT index in the catalog entry and that contains the same device list as SYSALLDA.

  To get to the EDT index:

  – Use the LISTCAT command, or,
  – If you have your MVSCP deck, count the UNITNAME statements for esoterics up to the statement that defines the esoteric name to get to the number for the token.

- Re-catalog the data sets with a generic device type name (for example, 3380), before using HCD to migrate IOCP/MVSCP data.

To determine if you have any data sets that have been cataloged with an esoteric, use the scan utility that is provided in the SYS1.SAMPLIB member IEFESOJL. This utility scans a catalog and lists the data sets that were cataloged with esoteric device group names. The prologue of this SAMPLIB member contains information on the modifications you have to make to the JCL to run the job in your installation.

SMS-related considerations

In a system managed by the storage management subsystem (SMS) you need to choose one of the following alternatives:

- The IODF data set is not managed by SMS. You can then specify the IODF volume serial number when creating an IODF.
- The IODF data set is managed by SMS. The automatic class selection (ACS) routines must be set up to automatically place the IODFs on the IODF volume. In this case SMS ignores the specified volume serial number except to pass it as a symbol to the ACS routines. The ACS routines, especially the storage group ACS routine, can use the volume serial number and the unit name to decide the SMS classes and the storage group.

Note: These considerations are important only for a production IODF that is used for IPL.

You also have to consider that HCD dynamically allocates some data sets (with fixed naming conventions). These data sets are:

- The data set used for the activity log. For more information see “Activity logging and change logging” on page 45. If an ACTLOG data set does not yet exist, HCD dynamically allocates one, using ESOTERIC system defaults (ALLOCxx of SYS1.PARMLIB, respectively the UADS entry). You have to make sure that the entries in your ACS routines do not conflict with the SMS provided defaults. For example, if your ACTLOG data set name is *not* managed by SMS, whereas your default ESOTERIC defines an SMS managed volume, an allocation error might result. If you want to use a specific volume, specify a volume serial number to allocate a new activity log in the HCD profile (see “Defining an HCD profile” on page 16).
- The data sets used by HCD for the migration of IOCP/MVSCP/HCPRIO data (HCDPRINT, HCDASMP, HCDUT1, HCDUT2, HCDUT3). For detailed information refer to “Insufficient data set sizes” on page 286.
- The data sets used when building an HCPRIO or IOCP input data set (both named HCDDECK), and the data set used when creating JES3 Initialization Stream Checker data (named HCDJES3).

ISPF-related considerations

The usual ISPF facilities are available for the HCD dialog. For example, you can:

- Suppress the display of function key assignments.
- Display panel identifiers.
- Change the position of the command line.

HCD supports the ISPF split-screen facility with the F2=Split and F9=Swap keys. So, if necessary, you can perform other ISPF operations during an HCD session. HCD cannot be used in two parallel ISPF sessions.

Compared to traditional ISPF applications, HCD enables system programmers to control a great number of hardware configuration objects by their related actions.

z/VM-related considerations

HCD allows the definition of VM operating systems and their devices including their VM-specific parameters. This is triggered by the "operating system type - VM" when defining an operating system. Figure 258 on page 329 shows the panel where you can enter the operating system type.

```
        Add Operating System Configuration


 Specify or revise the following values.

 OS configuration ID  . . . . . OPSYS02_
 Operating system type  . . . . VM        +

 Description  . . . . . . . . . z/VM operating system

 OS config ID for D/R site  . . ________  (generated for GDPS)

  F1=Help    F2=Split   F3=Exit    F4=Prompt  F5=Reset   F9=Swap
  F12=Cancel
```

Figure 258. Define a VM operating system

When you attach a device to a VM operating system, the Define Device Parameters / Features panel displays the operating system-specific parameters. See Figure 259 on page 329 for an example of attaching a device to a VM operating system.

```
            Define Device Parameters / Features
                                                                Row 1 of 5

 Specify or revise the values below.

 Configuration ID . : OPSYS02      z/VM operating system
 Device number  . . : 0100         Number of devices  : 1
 Device type  . . . : 3390

 Parameter/
 Feature     Value +          R Description
 OFFLINE     No                 Device considered online or offline at IPL
 SHARED      _________________  Device shared between multiple real systems
 UIRATE      DEFAULT            Hot I/O Recovery Rate
 MDC         DFLTON             Device to be cached in minidisk cache
 EQID        ________________   Device equivalency ID
```

Figure 259. Define Device Parameters/Features for VM Device

The VM specific functions of HCD consist of:

- Defining an operating system of type 'VM'.
- Defining devices to a VM operating system.
- Defining VM consoles.
- Migrating an HCPRIO input data set to an IODF. For more details refer to Chapter 12, “How to migrate existing input data sets,” on page 239.
- Creating an HCPRIO input data set from a production IODF. See “Build I/O configuration data” on page 192 for a description how to create an HCPRIO input data set based on the definitions in the IODF.
- Issuing VM device reports (including VM console report).

In a mixed environment, running a z/OS system in one partition and z/VM in another partition, any change of the VM definitions (for example, add a device) can be done without a POR for the processor. The ***Dynamic I/O Reconfiguration*** function for the hardware can be used to add this device to the Channel Subsystem (CSS). In a second step, a device can be set online dynamically. You do not have to IPL the z/VM system image. For more details refer to *z/VM CP Planning and Administration*.

If you are running z/OS and z/VM on separate processors, you can configure both systems with HCD in the same IODF. You can export the IODF to the z/VM system and activate it there using z/VM HCD. See *z/VM: I/O Configuration* for more details.

Appendix A. How to navigate through the dialog

This appendix illustrates the flow from the options on the HCD ***Primary Task Selection*** panel and the various actions that can be taken from each option. The panels that appear for option 1 provide an action bar at the top and a context menu for each object. Figure 269 on page 335 shows the general action bar valid for the action list panels. Some action lists offer special action bar choices that are not shown in the figure (for example the ***Show/Hide*** action bar choice on the Device List invoked from the Operating System List). Figure 263 on page 332 to Figure 267 on page 333 shows the options on the context menu and the navigation possibilities to other panels. Almost all of the options on the context menu can be directly selected by entering the action code next to the item in the list to be selected. Available action codes are shown in parentheses below the "Options Available" heading.

```
                        z/OS V2.1 HCD
Command ===> ______________________________________________________

                           Hardware Configuration

Select one of the following.

-   0.  Edit profile options and policies
    1.  Define, modify, or view configuration data
    2.  Activate or process configuration data
    3.  Print or compare configuration data
    4.  Create or view graphical configuration report
    5.  Migrate configuration data
    6.  Maintain I/O definition files
    7.  Query supported hardware and installed UIMs
    8.  Getting started with this dialog
    9.  What's new in this release

For options 1 to 5, specify the name of the IODF to be used.

I/O definition file . . . 'DOCU.IODF00.HCD.WORK'                +
```

Figure 260. ***Primary Task Selection*** *panel*

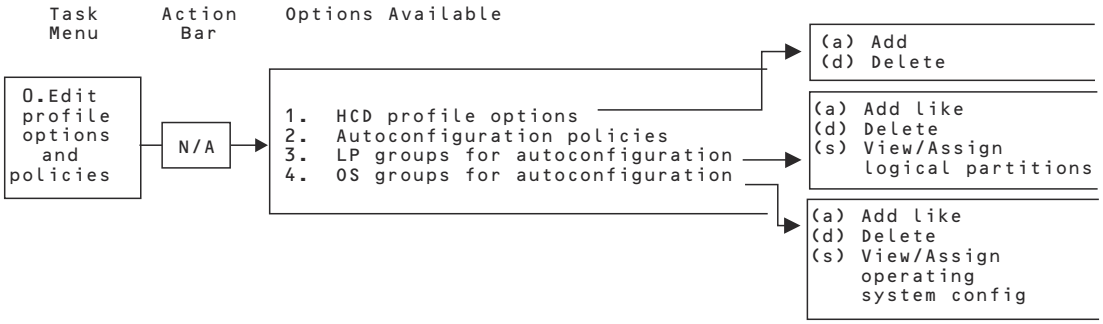

Figure 261. HCD - Edit profile options and policies - Option 0

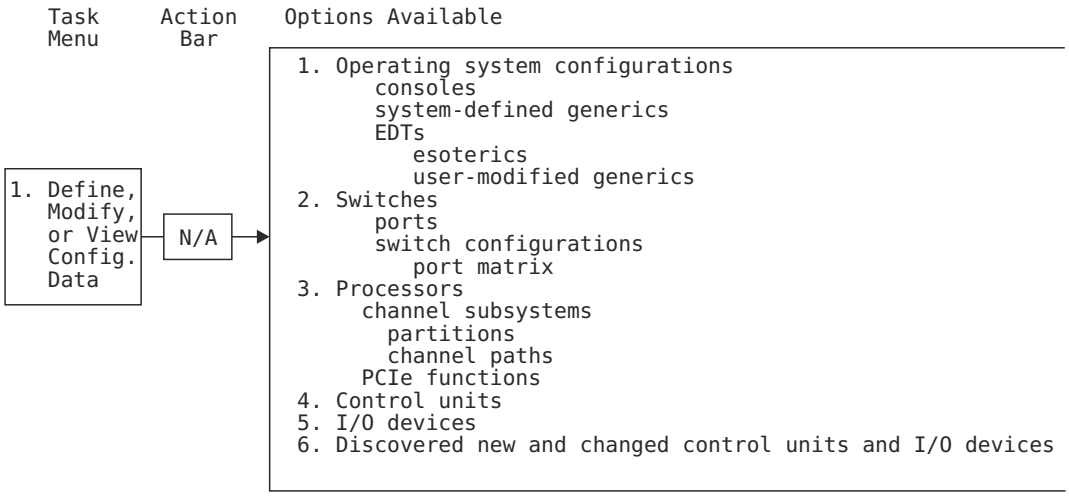

Figure 262. HCD - Define, Modify, or View Configuration Data - Option 1

© Copyright IBM Corp. 1994, 2022

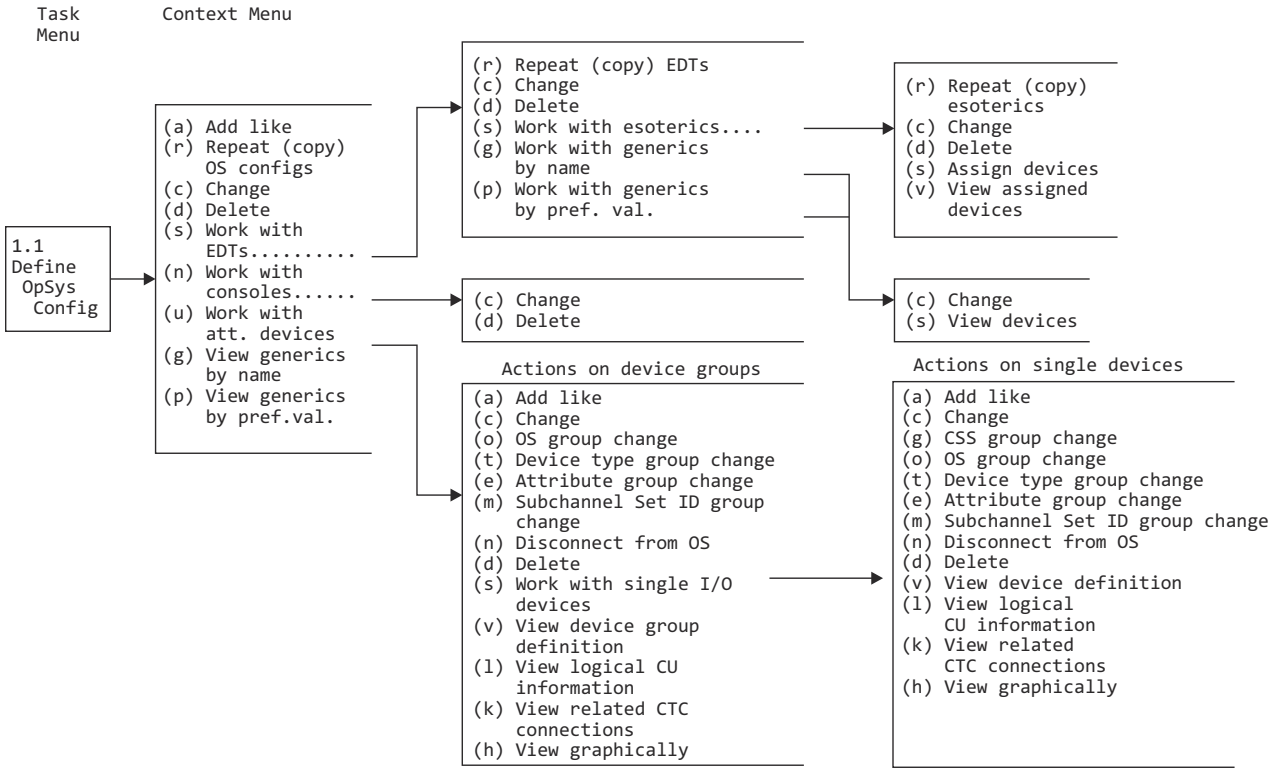

Figure 263. HCD - Define Operating System

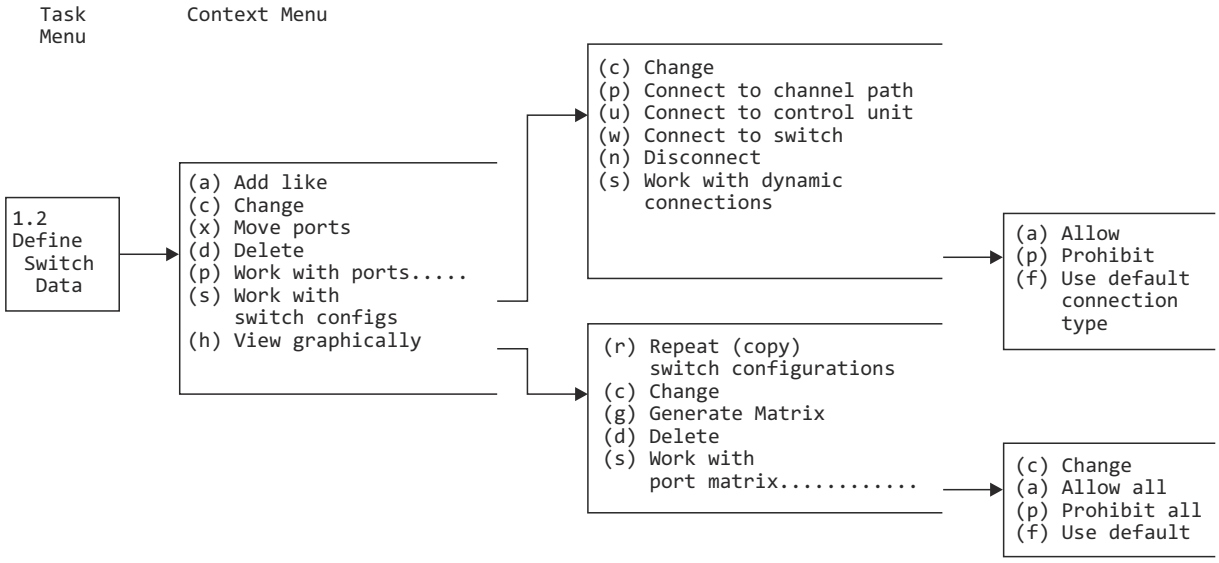

Figure 264. HCD - Define Switch - Option 1.2

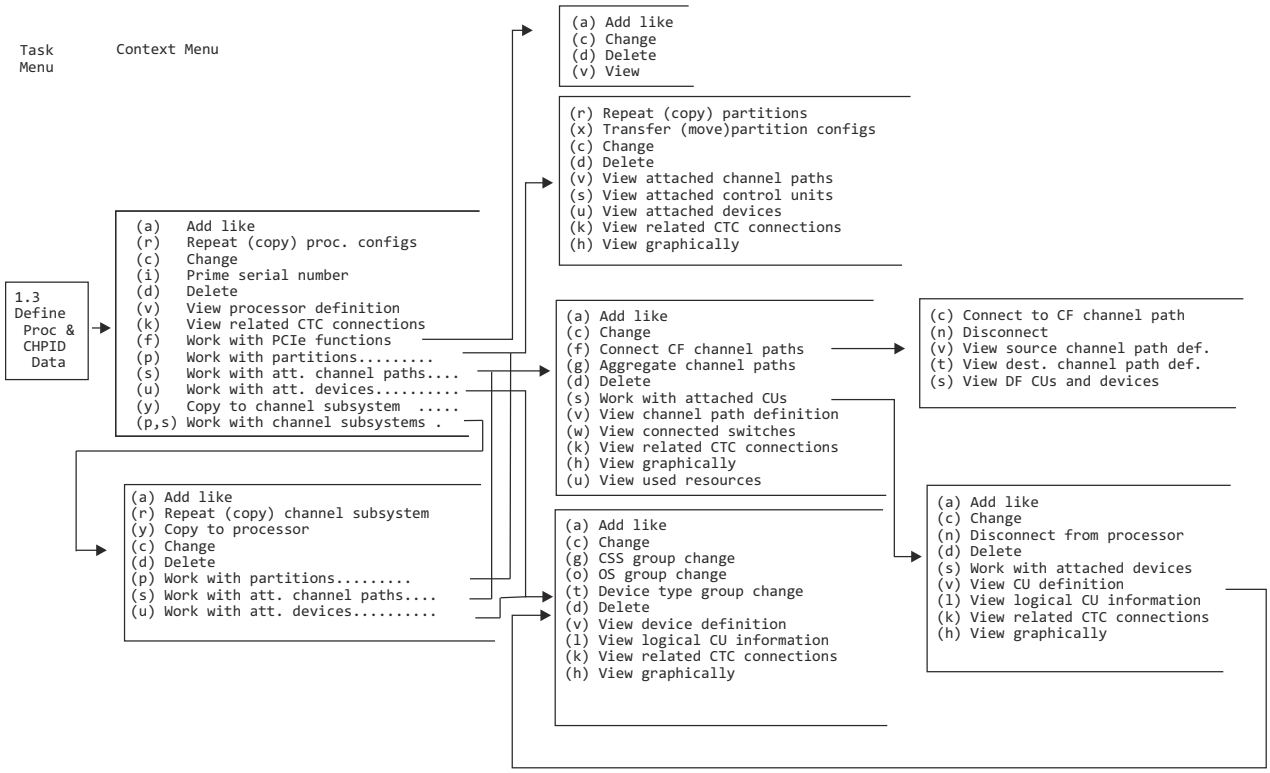

Figure 265. HCD - Define Processor and Channel Path - Option 1.3

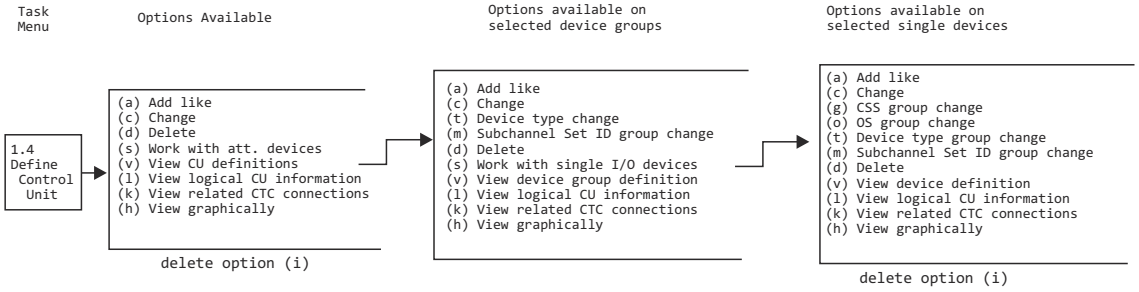

Figure 266. HCD - Define Control Unit - Option 1.4

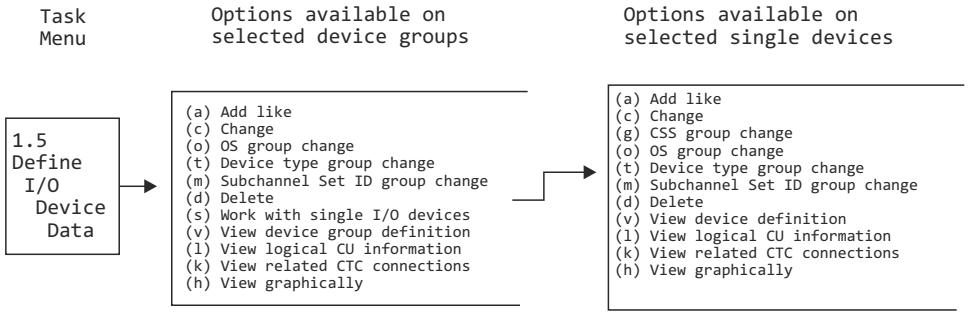

Figure 267. HCD - Define I/O Device - Option 1.5

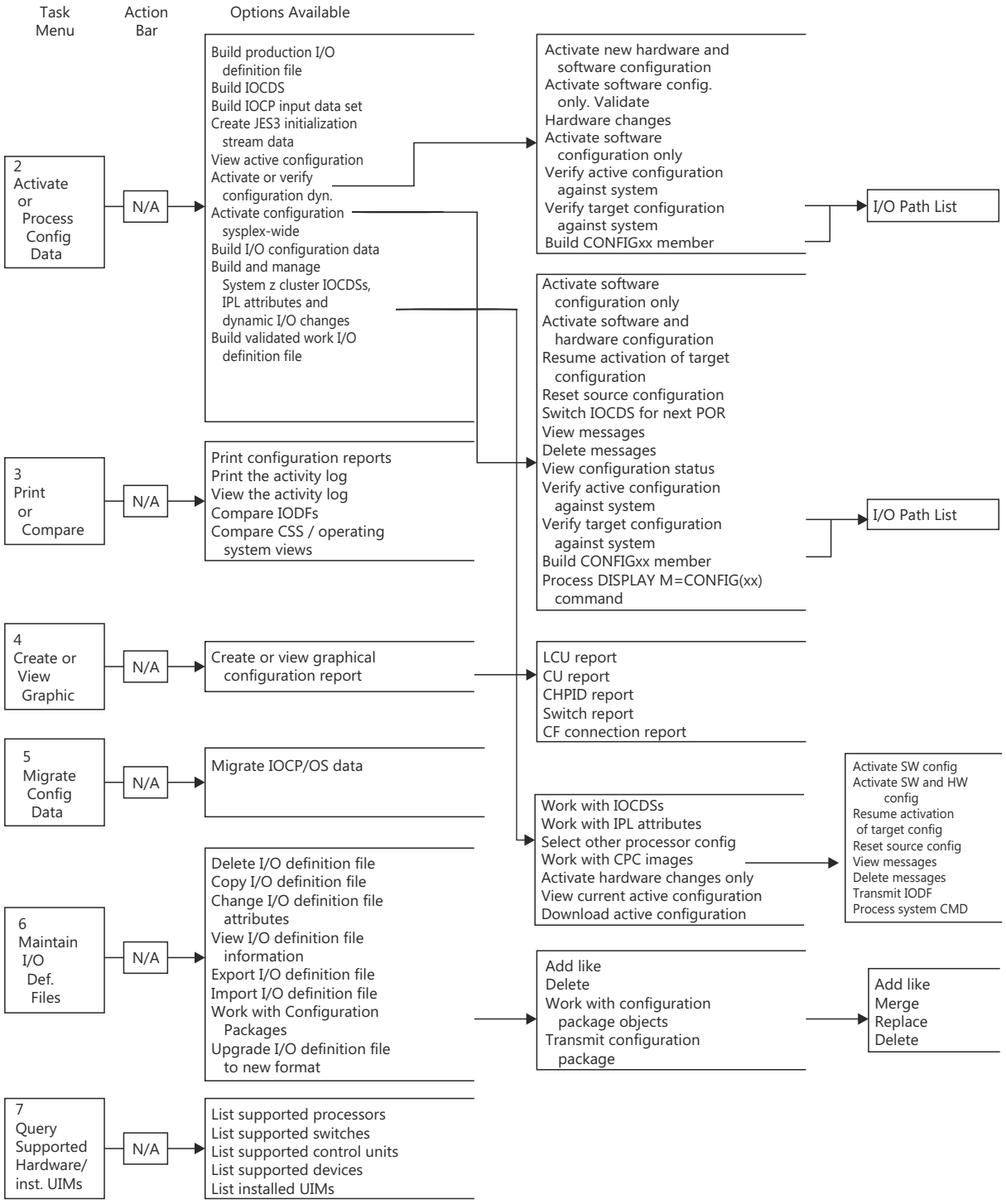

Figure 268. HCD - Primary Tasks - Options 2 - 7

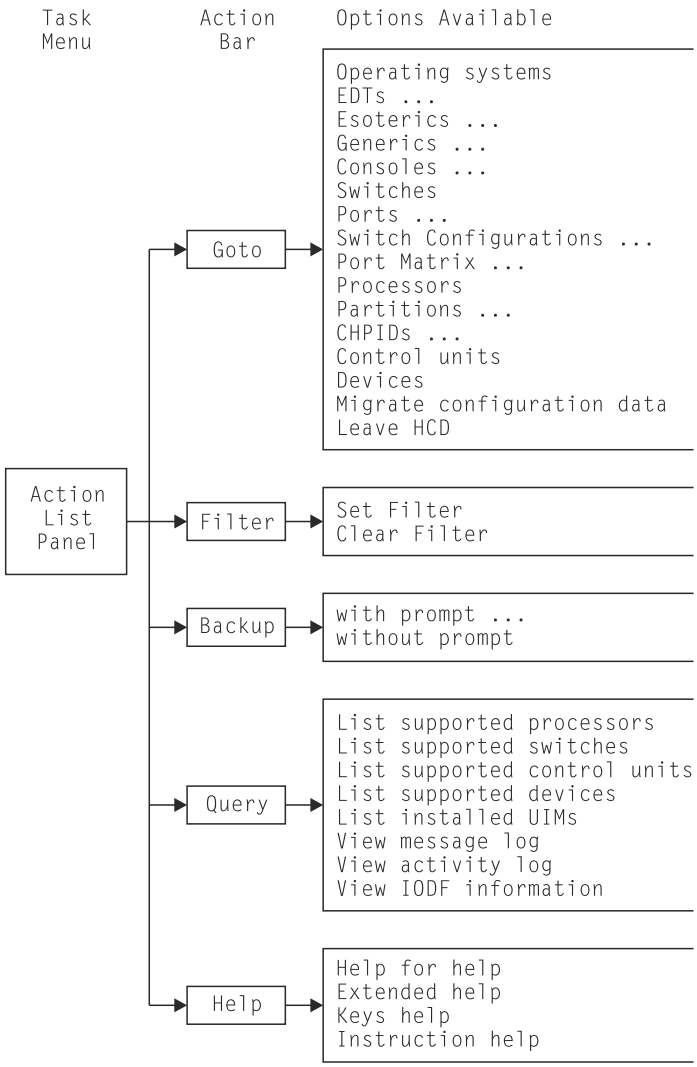

Figure 269. HCD - Generic Action Bar Options

Figure 270. HCD - Generic Action Bar Options

Appendix B. Configuration reports

This information unit shows examples of the configuration reports that you can produce with HCD:

- “Textual configuration reports” on page 337
- “Graphical configuration reports” on page 375
- “IODF compare reports” on page 376.

Textual configuration reports

This section shows examples for textual configuration reports. “Print configuration reports” on page 217 lists the different report types available and describes how to produce them.

Channel subsystem reports

The following channel subsystem reports are available:

- “Processor Summary Report” on page 337
- “Channel Subsystem Summary Report” on page 338
- “PCIE function summary report” on page 338
- “CHID Summary Report” on page 339
- “Partition Report” on page 340
- “IOCDS Report” on page 341
- “Channel Path Summary Report” on page 341
- “Channel Path Detail Report” on page 343
- “CF Channel Path Connectivity Report” on page 344
- “Control Unit Summary Report” on page 345
- “Control Unit Detail Report” on page 346
- “Device Summary Report” on page 347
- “Device Detail Report” on page 348

Processor Summary Report

```
                                        PROCESSOR SUMMARY REPORT                  TIME: 15:29  DATE: 2012-10-21  PAGE A-   1
PROCESSOR                        CONFIG.   SERIAL                                     ----- SNA ADDRESS -----
   ID      TYPE      MODEL     MODE      NUMBER      DESCRIPTION                       NETWORK NAME  CPC NAME   LSYSTEM
_________  ________  ________  ________  __________  ________________________________  ____________________  ________
ERV01WWW   2094      S38       LPAR      1212122094  mix system                        ZZZZZZZZ      ERV01      ERV01
ERV02O1    9672      ZX7       LPAR      4434349672  old system 1                      IBM390PS      ERV02O1
ERV02O2    9672      ZX7       LPAR      1111119672  old system 2                      IBM390PS      ERV02O2
ERV05A1    2094      S28       LPAR      9912992094  Standalone FCTC CTC/CNC           IBM390PS      ERV05A1
ERV05A2    2094      S54       LPAR      9929912094  standalone FCTC CTC/CNC proc      IBM390PS      ERV05A2
NET01      2096      R07       LPAR      3322332096  Network System                    ZZZZZZZZ      NET01

PROCESSOR  ----SUPPORT LEVEL----
   ID        ID      DESCRIPTION
_________  ________  ____________________________________________________________
ERV01WWW   H050331   XMP, Basic 2094 support
ERV02O1    H990531   FCV, OSD, OSE, IC, ICB, CF, OSA, ESCON, Parallel
ERV02O2    H990531   FCV, OSD, OSE, IC, ICB, CF, OSA, ESCON, Parallel
ERV05A1    H050331   XMP, Basic 2094 support
ERV05A2    H050331   XMP, Basic 2094 support
NET01      H060930   XMP, 2096-R07 support
```

Figure 271. Processor Summary Report

© Copyright IBM Corp. 1994, 2022

CONFIG. MODE Indicates the operation mode in which a processor may operate. These modes are:

BASIC
The processor is not logically partitioned.

LPAR
The processor is logically partitioned. Several operating systems may run concurrently in different partitions of the processor.

SNA ADDRESS The SNA Address consists of Network name and CPC name and associates the CPC and the processor definition in the IODF.

SUPPORT LEVEL Shows the ID of the processor support level and an enumeration of the provided functionality.

Channel Subsystem Summary Report

Only XMP processors will have a channel subsystem report which shows the defined channel subsystems.

```
                                        CHANNEL SUBSYSTEM SUMMARY REPORT             TIME: 12:55  DATE: 2014-06-17  PAGE A-   1
PROCESSOR ID  P2964        TYPE  2964       MODEL N96
          DEVICES IN SS0   DEVICES IN SS1   DEVICES IN SS2   DEVICES IN SS3
 CSS ID   MAXIMUM ACTUAL   MAXIMUM ACTUAL   MAXIMUM ACTUAL   MAXIMUM ACTUAL   DESCRIPTION
 ------   ------- ------   ------- ------   ------- ------   ------- ------   --------------------------------
  0         65280  16825     65535      0     65535      0     65535      0
  1         65280  16709     65535      0     65535      0     65535      0
  2         65280  14587     65535      0     65535      0     65535      0
  3         65280  15239     65535      0     65535      0     65535      0
  4         65280     14     65535      0     65535      0     65535      0   CSS 4 of P2964
  5         65280      0     65535      0     65535      0     65535      0
```

Figure 272. Channel Subsystem Summary Report

Note: This report and the following channel subsystem reports show the processor token only if the IODF is a production IODF.

PCIE function summary report

The PCIe Function Summary Report provides an overview of the defined PCIe functions for the specified processor.

```
                                        PCIE FUNCTION SUMMARY REPORT
 PROCESSOR ID  P3906    TYPE  3906     MODEL  M01      CONFIGURATION MODE: LPAR

FID  VF  CHID  PORT  TYPE          UID   DESCRIPTION
____ ___ _____ ____  ____________  ____  ________________________________
0001  31 100         ROCE          F010  roce vf=31 2pnetids
0011  31 120         ROCE          F011  roce vf=31 1pnetid
0015   1 115   1     ZHYPERLINK          synch io 15 port 115/1 vf 1
0016 127 115   1     ZHYPERLINK          synch io 16 port 115/1 vf 127
0017 127 115   2     ZHYPERLINK          synch io 17 port 115/2 vf 127
0018   1 115   2     ZHYPERLINK    00A4  synch io 18 port 115/2 vf 1
0019   2 115   2     ZHYPERLINK    00A5  synch io 19 port 115/2 vf 2
0020   1 7C0         ISM                 ism1
0021   2 7C0         ISM                 ism2
0030     130         RCE
0031     131         RCE
0150 100 150   2     ROCE-2        1200  roc2 adapter 150 port 150/2
0151 101 150   2     ROCE-2        1201  roc2 adapter 151 port 150/2
0217   1 117   2     ZHYPERLINK          synch io adapter 217 port 117/2
0218   1 117   1     ZHYPERLINK          synch io adapter 218 port 117/1
0252  10 250         ZEDC-EXPRESS  888A


                                                     PARTITION NUMBERS
                 CSS0----------- CSS1----------- CSS2----------- CSS3----------- CSS4----------- CSS5-----------
FID  VF  CHID  P 123456789ABCDEF 123456789ABCDEF 123456789ABCDEF 123456789ABCDEF 123456789ABCDEF 123456789ABCDEF
____ ___ _____ _ _______________ _______________ _______________ _______________ _______________ _______________
0001  31 100     -------------AC --------------- --------------- --------------- --------------- ---------------
0011  31 120     -------------AC --------------- --------------- --------------- --------------- ---------------
0015   1 115   1 -A------------C --------------- --------------- --------------- --------------- ---------------
0016 127 115   1 -A------------C --------------- --------------- --------------- --------------- ---------------
0017 127 115   2 -A------------C --------------- --------------- --------------- --------------- ---------------
0018   1 115   2 --------------- --------------- --------------- --------------- --------------- ---------A-----
0019   2 115   2 --------------- --------------- --------------- --------------- --------------- ---------A-----
0020   1 7C0     -------------A- --------------- --------------- --------------- --------------- C--------------
0021   2 7C0     -------------A- --------------- --------------- --------------- --------------- C--------------
0030     130     --A------------ --------------- --------------- --------------- --------------- C--------------
0031     131     --A------------ --------------- --------------- --------------- --------------- C--------------
0150 100 150   2 -------------A- --------------- --------------- --------------- --------------- C--------------
0151 101 150   2 -------------A- --------------- --------------- --------------- --------------- C--------------
0217   1 117   2 -------------A- --------------- --------------- --------------- --------------- ---------------
0218   1 117   1 --------------A --------------- --------------- --------------- --------------- ---------------
0252  10 250     A-------------- --------------- --------------- --------------- --------------- ---------------


    CSS0           CSS1           CSS2           CSS3           CSS4           CSS5
    PARTITION      PARTITION      PARTITION      PARTITION      PARTITION      PARTITION
    NUM  NAME      NUM  NAME      NUM  NAME      NUM  NAME      NUM  NAME      NUM  NAME
    ____ ________  ____ ________  ____ ________  ____ ________  ____ ________  ___ ________
     1   LP01       1   LP11       1   *          1   *          1   *          1   CF51
     2   LP02       2   LP12       2   *          2   *          2   *          2   CF52
     3   LP03       3   CF13       3   *          3   *          3   *          3   *
     4   *          4   CF14       4   *          4   *          4   *          4   *
     5   *          5   *          5   *          5   *          5   *          5   *
     6   *          6   *          6   *          6   *          6   *          6   *
     7   *          7   *          7   *          7   *          7   *          7   *
     8   *          8   *          8   *          8   *          8   *          8   *
     9   *          9   *          9   *          9   *          9   *          9   CO59
     A   *          A   *          A   *          A   *          A   *          A   CO5A
     B   *          B   *          B   *          B   *          B   *          B   *
     C   *          C   *          C   *          C   *          C   *          C   *
     D   *          D   *          D   *          D   *          D   *          D   *
     E   CF0E       E   *          E   *          E   *          E   *          E   *
     F   CF0F       F   *          F   *          F   *          F   *          F   *


    LEGEND FOR PARTITION NUMBERS FIELD:
    ___________________________________
     A     - PARTITION IS IN FUNCTION ACCESS LIST
     C     - PARTITION IS IN FUNCTION CANDIDATE LIST ONLY
     -     - PARTITION IS NOT IN FUNCTION ACCESS OR CANDIDATE LIST
```

Figure 273. PCIe Function Summary Report

CHID Summary Report

The ***CHID Summary Report*** provides an overview of all CHIDs defined for channel paths and PCIe functions of a processor and also gives an overview of the defined PNET IDs for the CHIDs.

```
                                        CHID SUMMARY REPORT                          TIME: 09:54 DATE:  2017-02-28  PAGE A-   3
 PROCESSOR ID  P3906V2  TYPE  3906     MODEL  M01      CONFIGURATION MODE: LPAR
CHID         CHPID
AID/P  VF    FID   TYPE          SWITCH    CSS Numbers    PNET-1           PNET-2           PNET-3           PNET-4
____   __   ____  ____________  ______  _____________   ________________ ________________ ________________ ________________
110     1   0110  ZEDC-EXPRESS  ______  |0| | |3| |5|
111     1   0111  ZEDC-EXPRESS          |0| | |3| |5|
150         0050  NVME                  |0| | |3| |5|
151         0051  NVME                  |0| | |3| |5|
214     4   0014  ROCE                  |0| | |3| |5|   ROCE1            ROCE2
214    15   0015  ROCE                  |0| | |3| |5|   ROCE1            ROCE2
220         0001  RCE                   |0| | |3| |5|
221     1   0010  ROCE                  |0| | |3| |5|
222     1   0011  ROCE                  |0| | |3| |5|   ROCE1
300/1   1   0300  ZHYPERLINK            |0| | | | |5|
300/1   2   0301  ZHYPERLINK            |0| | | | |5|
300/1   3   0302  ZHYPERLINK            |0| | | | |5|
301/2   1   0350  ZHYPERLINK            |0| | | | |5|
333/1   2   0400  ZHYPERLINK            |0| | | | | |
7C0     1   0210  ISM                   |0| | |3| |5|   ISMPNET
7C1     1   0211  ISM                   |0| | |3| |5|   ISMPNET
7C2     4   0212  ISM                   | | | |3| |5|   ISMPNET
11 /1          01  CS5                  | | | | |4| |
12 /1          02  CS5                  | | | | |4| |
13 /1          03  CS5                  | | | | |4| |
14 /2          04  CS5                  | | | | |4| |
15 /2          05  CS5                  | | | | |4| |
 * /2          11  CS5                  | | | | |4| |
 * /2          12  CS5                  | | | | |4| |
 * /2          20  CS5                  | | | | |4| |
 * /2          25  CS5                  | | | | |4| |

TOTALS FOR CHANNEL CARDS
   COUPLING        STORAGE              OSA                INTERNAL                          PCIE
CIB  CS5  CL5     FC  FCP    OSC OSD OSE OSM OSN OSX      ICP IQD      ISM  NVME  RCE  ROCE  ROCE-2  ZHYPERLINK  ZEDC
___  ___  ___     __  ___    ___ ___ ___ ___ ___ ___      ___ ___      ___  ____  ___  ____  ______  __________  ____
  0    5    0      0    0     0   0   0   0   0   0        0   0        3    2    1    3     0         3          2

CALCULATIONS OF TOTAL CHANNEL CARD VALUES:
 COUPLING  - EACH USED ADAPTER ID (AID) AND EACH CHANNEL ID (CHID) COUNTS AS ONE ADAPTER CARD
 STORAGE   - EACH USED CHANNEL ID (CHID) COUNTS AS ONE ADAPTER CARD
 PCIe      - EACH USED CHANNEL ID (CHID) COUNTS AS ONE ADAPTER CARD
```

Figure 274. CHID Summary Report

Partition Report

```
                                        PARTITION  REPORT                    TIME: 09:27  DATE: 2016-04-27  PAGE B-   1

   PROCESSOR ID  P2964V3      TYPE  2964       MODEL NC9
   CSS ID  0
    PARTITION NAME  NUMBER  USAGE  UID  DESCRIPTION
    ______________  ______  _____  ___  ________________________________
    LP0A            A       CF/OS  Y    Linux Test
    LP0B            B       OS     Y    Linux Test BTM
    LP0C            C       OS     Y    Linux Test
    LP0D            D       OS     N    Mini-VM   5 Guests
    LP0E            E       OS     N    Midi-VM  10 Guests
    LP0F            F       OS     N    Big-VM   60 Guests + BTM guests
    LP01            1       OS     Y    Test partition 01
    LP02            2       OS     N    Linux Test
    LP03            3       OS     N    Linux Test
    LP04            4       OS     N    Linux Test
    LP05            5       OS     N    Linux Test
    LP06            6       OS     N    Linux Test
    LP07            7       OS     N    Linux Test
    LP08            8       OS     N    Linux Test
    LP09            9       OS     N    Linux Test


                                         PARTITION  REPORT                    TIME: 09:27  DATE: 2016-04-27  PAGE B-   2
   PROCESSOR ID  P2964V3      TYPE  2964       MODEL NC9
   CSS ID  1
    PARTITION NAME  NUMBER  USAGE  UID  DESCRIPTION
    ______________  ______  _____  ___  ________________________________
    LP1A            A       OS     N    Linux Test
    LP1B            B       OS     N    Linux Test BTM
    LP1C            C       OS     N    Linux Test
    LP1D            D       OS     N    Mini-VM   5 Guests
    LP1E            E       OS     N    Midi-VM  10 Guests
    LP1F            F       OS     N    Big-VM   60 Guests
    LP11            1       OS     N    Linux Test
    LP12            2       OS     N    Linux Test
    LP13            3       OS     N    Linux Test
    LP14            4       OS     N    Linux Test
    LP15            5       OS     N    Linux Test
    LP16            6       OS     N    Linux Test
    LP17            7       OS     N    Linux Test
    LP18            8       OS     N    Linux Test
    LP19            9       OS     N    Linux Test
```

Figure 275. Partition Report

NUMBER Is the partition number (MIF ID).

USAGE Specifies the usage type of a partition: CF indicates a partition supporting coupling facility. OS indicates a partition running an operating system. CF/OS indicates a partition supporting coupling facility or running an operating system.

UID Specifies the partition flag if UID uniqueness is required and checked.

IOCDS Report

IOCDS data are retrieved from the support element when a SNA address is defined. Otherwise, the IOCDS data are retrieved from the IODF. An IOCDS status line at the end of the report indicates the source of the IOCDS data.

```
                                                I O C D S   REPORT                    TIME: 00:06  DATE: 2012-10-21  PAGE C-   1
   PROCESSOR ID  CFS          TYPE  9672        MODEL RX6
                                 -----Token Match---- Write   --Last Update--
IOCDS NAME     FORMAT STATUS     IOCDS/HSA IOCDS/Proc Protect DATE       TIME  IOCDS Configuration Token Information

----- -------- ------ --------- --------- ---------- ------- ---------- ----- ----------------------------------------
A0    316ACFS  LPAR   POR       Yes       No         Yes-POR 2004-11-12 06:14 CFS      16:27:52 04-11-11 SYS4     IODF71
A1    063ACFS  LPAR   Alternate No        No         No      2004-03-03 16:49 CFS      16:23:49 04-03-03 SYS4     IODF72
A2    091ACFS  LPAR   Alternate No        No         No      2004-04-01 00:01 CFS      16:08:02 04-03-31 SYS4     IODF73
A3    296ACFS  LPAR   Alternate No        No         No      2004-10-22 11:45 CFS      14:59:05 04-10-21 SYS4     IODF71
                 IOCDS status retrieved from the support element
```

Figure 276. IOCDS Report

NAME Represents the user-defined name of the IOCDS (derived from the MSG1 parameter)

FORMAT IOCDS format (BASIC or LPAR)

STATUS Indicates the status of the IOCDS: *Alternate, POR, Invalid* (see "Build processor cluster IOCDSs" on page 181).

Token Match - IOCDS/HSA Indicates whether the IOCDS token matches the current HSA token

Token Match - IOCDS/Proc Indicates whether the IOCDS token matches the current processor token in the IODF

Write Protect Indicates whether the IOCDS is write-protected (*Yes*) or not (*No*), or currently write-protected because it is the POR IOCDS (*Yes-POR*).

Last Update DATE/TIME Time stamp of IOCDS creation time

IOCDS Configuration Token Information is the configuration token information stored in the support element and shows the relationship between the IOCDS and the production IODF from which it was created.

Channel Path Summary Report

If applicable, for spanned channels, there is a separate sub-report after the partition table of a processor which shows the connection of spanned channel paths to channel subsystems.

```
                                        CHANNEL PATH SUMMARY REPORT                 TIME: 11:57 DATE:  2016-08-09  PAGE D-   1
PROCESSOR ID  P2964V5  TYPE  2964     MODEL  N96      CONFIGURATION MODE: LPAR
   CSS ID  0
                                                --SWITCH---
     CHID       MFS DIS       I/O      DYN                        PARTITION NUMBERS
HPID AID/P TYPE KB  QP  MNGD CLUSTER   ID  ID PORT  MODE  |1|2|3|4|5|6|7|8|9|A|B|C|D|E|F|  DESCRIPTION

____ _____ ____ ___ ___ ____ ________  ___ __ ____  ____  _______________________________  ________________________________
10   0F /2 CIB          NO                            DED   | | | | | | | | |A| | | | | |
11   0F /2 CIB          NO                            DED   | | | | | | | | | | | | | |A|
20   30 /2 CS5          NO                            SHR   | |A| | | | | |C|C| | | | | | |
21   30 /2 CS5          NO                            SHR   | |A| | | | | |C|C| | | | | | |
22   30 /2 CS5          NO                            SPAN  | |A| | | | | |C|C| | | | | | |
23   30 /2 CS5          NO                            SPAN  | |A| | | | | |C|C| | | | | | |
30   030   FC           NO             17  17  0C   SPAN  | |A|A|A|A|A|A|A|A|A|A|A|A|A|A|  8Gb SX DS8K16 + FCTC
31   031   FC           NO             17  17  8C   SPAN  | |A|A|A|A|A|A|A|A|A|A|A|A|A|A|  8Gb SX DS8K16Test/Dev + Tape
32   032   FC           NO             17  17  1C   SPAN  | |A|A|A|A|A|A|A|A|A|A|A|A|A|A|  8Gb SX DS8K16Test/Dev
33   033   FC           NO             17  17  9C   SPAN  | |A|A|A|A|A|A|A|A|A|A|A|A|A|A|  8Gb SX DS8K16Test/Dev
3C   03C   FC           NO             17  17  8B   SPAN  | |A|A|A|A|A|A|A|A|A|  |A|A|A|A|  8Gb SX DS8K16
3D   03D   FC           NO             17  17  9B   SPAN  | |A|A|A|A|A|A|A|A|A|  |A|A|A|A|  8Gb SX DS8K16
44   044   FC           NO             10  10  0F   SPAN  | | | | | | | | |A| | | |A|  8Gb SX DS8K4 to FCS17
45   045   FC           NO                            SPAN  | | | | | | | | | | | | |C|  8Gb SX was VSE Tape-Robby
99   *     OSD      YES NO                            SPAN  | |A|A|A|A|A|A|A|A|A|A|A|A|A|A|  Expr.3 10GbE LR E480,128
9C   *     OSD      YES NO                            SPAN  | |A|A|A|A|A|A|A|A|A|A|A|A|A|A|  Expr.3 10GbE LR F000,128
9D   *     OSD      YES NO                            SPAN  | |A|A|A|A|A|A|A|A|A|A|A|A|A|A|  Expr.3 10GbE LR F080,128
FB   7C2   IQD  16      NO                            SPAN  | |A|A|A|A|A|A|A|A|A|A|A|A|A|A|  IQD 16 kB Maximum frame size
FC   7C3   IQD  24      NO                            SPAN  | |A|A|A|A|A|A|A|A|A|A|A|A|A|A|  IQD 24 kB Maximum frame size
FD   7C5   IQD  40      NO                            SPAN  | |A|A|A|A|A|A|A|A|A|A|A|A|A|A|  IQD 40 kB Maximum frame size
FE   7C6   IQD  64      NO                            SPAN  | |A|A|A|A|A|A|A|A|A|A|A|A|A|A|  IQD 64 kB Maximum frame size


     PARTITION
  NUMBER    NAME
  ______    ________
    1       LP01
    2       LP02
    3       LP03
    4       LP04
    5       LP05
    6       LP06
    7       LP07
    8       LP08
    9       LP09
    A       LP0A
    B       LP0B
    C       LP0C
    D       LP0D
    E       LP0E
    F       LP0F

      SPANNED CHANNEL PATHS
   CHPID            CSS IDS
   NUMBER  TYPE  |0|1|2|3|4|5|
   ______  ____  _____________
     22    CS5   |X| | | |X|X|
     23    CS5   |X| | | |X|X|
     30    FC    |X|X|X|X| | |
     31    FC    |X|X|X|X| | |
     32    FC    |X|X|X|X| | |
     33    FC    |X|X|X|X| | |
     3C    FC    |X|X|X|X| | |
     3D    FC    |X|X|X|X| | |
     44    FC    |X|X|X|X| | |
     45    FC    |X|X|X|X| | |
     99    OSD   |X|X|X|X| | |
     9C    OSD   |X|X|X|X| | |
     9D    OSD   |X|X|X|X| | |
     FB    IQD   |X|X|X|X| | |
     FC    IQD   |X|X|X|X| | |
     FD    IQD   |X|X|X|X| | |
     FE    IQD   |X|X|X|X| | |
```

Figure 277. Channel Path Summary Report

CHID AID/P
: For external channels: designate the physical channel identifier (CHID), the HCA adapter ID (AID) and HCA port (P) or the physical channel identifier (CHID) and port (P). For internal channels: designate the virtual channel identifier (VCHID).

DIS QP
: Indicates whether queue prioritization is disabled.

MFS KB
: Designates the maximum frame size in KB. For channels of type IQD, this field also indicates whether or how this channel exploits the extended IQD function:

  blank
  : indicates the HiperSockets function

  X
  : indicates IEDN support (IQDX)

  B
  : indicates bridge support

MNGD
: Indicates whether the channel path is managed.

I/O CLUSTER
: The I/O cluster name for managed channel paths.

DYN. SWITCH	Designates the switch holding the dynamic connection.
SWITCH ID	Designates the switch the channel is physically plugged in (entry switch).
PORT	Designates the entry port on the entry switch.
MODE	Operation mode of the channel path.

Channel Path Detail Report

The Channel Path Detail Report lists the channel paths defined per processor with their attributes and attachment information.

In addition, the switch connections on the path between the CHPID and the control unit are shown if they can be determined by HCD. The entry switch and port of the CHPID are always shown.

For an entry switch of a CHPID which is defined as a dynamic switch, the control unit port is shown if it is compatible with the link address defined for the CHPID. For an entry switch of the CHPID which is defined as a dedicated switch, the control unit port or the ports connecting the switches are only shown if switch configurations are defined which allow HCD determining a valid path between CHPID and control unit.

In case of chained switches, the first print line for a channel path shows the switch the channel path is physically plugged in. The second print line shows the switch the control unit is connected to. In addition, the first print line shows the ID of the switch with the dynamic connection.

Each attached control unit of a specific channel path is separated by a line.

The first print line for an attached control unit shows the first unit address range defined for the control unit. If there are more unit address ranges defined for a control unit, these are shown in the following print lines. Together with the unit address range(s) of the control unit the attached devices of the control unit are shown grouped according to device types and consecutive numbers and unit addresses. The report shows the starting device number and range of the device group. The unit address describes the address of the first device in the range.

For FICON switches, the dynamic switch ID is empty. The control unit port ID is shown as a two-byte port address (the port ID prefixed by the switch address) when used in a cascaded switch environment, or as a one-byte port address otherwise. For cascaded FICON switches, only the channel path port ID and the control unit port ID are shown, but no connection between the switches.

Note: For a Coupling Facility control unit, all CF devices attached to this control unit are listed, not only those devices that are defined for the connected coupling facility channel path described in the row.

```
                                    CHANNEL PATH DETAIL REPORT                  TIME: 12:57  DATE: 2012-10-21  PAGE E-   1
PROCESSOR ID R35      TYPE 2817     MODEL M49      CONFIGURATION MODE: LPAR
    CSS ID  0
                                 ---- SWITCH ----                                  UNIT ADDR                UNIT
       CHID                     ID  PR  CU   DYN  --- CONTROL UNIT ---  CU-          RANGE    -- DEVICE --  ADDR  DEVICE
  CHPID AID/P  TYPE    MNGD   MODE      PN  PN    ID  NUMBER  TYPE-MODEL    ADD  PROTOCOL  FROM  TO   NUMBER,RANGE  START TYPE-MODEL
  ____ _____ ______   ____   ____  ___________ ___  ______ ___________________ ___ ________  ____  __  ___________  _____ __________
   00   5B0   OSD      NO    SPAN                   B302   OSA                          00   FE    B300,6       00   OSA
                                                                                                   B306,42      06   OSA
                                                                                                   B330,16      30   OSA
                                                                                                   B340,6       40   OSA
                                                                                                   B346,42      46   OSA
                                                                                                   B370,16      70   OSA
  ____________________________________________________________________________________________________________________________
   0C   130   OSC      NO    SPAN                   0003   OSC                          00   FD    0090,16      00   3270-X
                                                                                                   1090,4       10   3270-X
  ____________________________________________________________________________________________________________________________
   0D   131   OSM      NO    SPAN
  ____________________________________________________________________________________________________________________________
   0E   1E1   CFP      NO    SPAN                   FFDF   CFP                                  F0D4,7            CFP
                                                                                                   F0DB,7            CFP
  ____________________________________________________________________________________________________________________________
   0F   1E9   CFP      NO    SPAN                   FFDF   CFP                                  F0D4,7            CFP
                                                                                                   F0DB,7            CFP
  ____________________________________________________________________________________________________________________________
   12   1F2   CNC      NO    SHR                 1A   0690   3590                         00   03    0690,4       00   3590
                                                 ____________________________________________________________________________
                                                 1A   1A39   3590                         00   0F    0A38,2       00   3590
                                                 ____________________________________________________________________________
                                                 1A   1A55   3590                         00   03    0A54,4       00   3590
  ____________________________________________________________________________________________________________________________
   30   220   FC       NO    SPAN  10  2A  6140       2000   2107          2              00   9F    2000,160     00
_______________________________________________________________________________________________________________________________
                                    10  2A  611A       2800   2107          1              00   FF    2800,40      00   3390B
                                                                                                   2828         28   3390B
                                                                                                   2829,39      29   3390B
                                                                                                   2850,2       50   3390B
                                                                                                   2852,6       52   3390B
                                                                                                   2858,88      58   3390B
                                                                                                   28B0,5       B0   3390B
                                                                                                   28B5,11      B5   3390B
                                                                                                   28C0         C0   3390B
                                                                                                   28C1,8       C1   3390B
                                                                                                   28C9,7       C9   3390B
                                                                                                   28D0,48      D0   3390A
                                                 ____________________________________________________________________________
                                                       10  2A  612F       4001   2107          0              00   FF    4000,96      00   3390B
                                                                                                   40A0,16      A0   3390B
```

Figure 278. Channel Path Detail Report

SWITCH ID Designates the entry switch the channel path is physically plugged in. For cascaded FICON switches, a second line is shown with the ID of the switch to which the control unit is connected.

SWITCH PR PN Designates the entry port of the entry switch.

SWITCH CU PN Designates the port the control unit is connected to. For a cascaded FICON switch, the port ID is prefixed by the switch address.

SWITCH DYN ID It designates the switch holding the dynamic connection.

CF Channel Path Connectivity Report

For XMP processors, there will be a single CF Channel Path Connectivity Report. The CHPID numbers are prefixed by the channel subsystem ID. For example `1.0C` denotes CHPID 0C from CSS 1. If a spanned channel path is used, the CHPIDs are reported from all channel subsystems together with the accessed partitions in the channel subsystems.

```
                                CF CHANNEL PATH CONNECTIVITY REPORT                TIME: 13:06  DATE: 2012-10-21  PAGE F-   1

  PROCESSOR ID R35      TYPE 2817     MODEL M49      CONFIGURATION MODE: LPAR

--------------- SOURCE -------  -------------------- DESTINATION -------------------- --- SOURCE ---- - DESTINATION -
                  ACCESS/CAND  PROCESSOR                                  ACCESS/CAND  CNTRL DEVICE    CNTRL DEVICE    CNTL
CHPID TYPE MODE O  LIST        ID        TYPE-MODEL     CHPID TYPE MODE  LIST         UNIT  NUM,RANGE UNIT  NUM,RANGE TYPE
_____ ____ ____ _ ___________  ____      ___________    _____ ____ ____  ___________  ____  ___________ ____  ___________ ____
0.0E  CFP  SPAN N  IRD7        H05       2097-E26       3.0E  CFP  SHR  *IRD7CF3     FFDF  F0D4,14                      CFP
1.0E               IRD8
 ---------------------------------------------------------------------------------------------------------------------------
0.0F  CFP  SPAN N  IRD7        H05       2097-E26       3.0F  CFP  SHR  *IRD7CF3     FFDF  F0D4,14                      CFP
1.0F               IRD8
 ---------------------------------------------------------------------------------------------------------------------------
0.F7  CFP  SPAN N  IRD7    (C) ECL2      2097-E40       0.81  CFP  SPAN *IRD4CFF     FFD8  DFBA,7    FFD4  DFB3,7    CFP
                                                                         D0E     (C)        DFE4,7          DFDD,7
1.F7              *IRD6                                  3.81            *D3F     (C)
 ---------------------------------------------------------------------------------------------------------------------------
0.F8  CFP  SPAN N  IRD7    (C) H05       2097-E26       3.06  CFP  SHR  *DWB3CFF      FFD6  DF9E,7    FFD0  DF97,7    CFP
                                                                                             DFAC,7          DFA5,7
1.F8              *IRD6    (C)
2.F8               DWB1
3.F8               DWB2

    LEGEND FOR ACCESS/CAND LIST:
    ----------------------------
     *  - PARTITION IS OF TYPE CF OR CF/OS
    (C) - PARTITION IS IN CHPID'S CANDIDATE LIST ONLY
```

Figure 279. CF Channel Path Connectivity Report

SOURCE/DESTINATION CHPID The identifier of the source/destination channel path.

SOURCE/DESTINATION TYPE Is the type of the source/destination channel path.

SOURCE/DESTINATION MODE Is the operation mode of the source/destination channel path.

SOURCE O CHPID is identified as occupied

SOURCE/DESTINATION ACCESS/CAND LIST Shows those partitions which the source/destination channel path has in its access or candidate list. Partitions in the candidate list are flagged with (C) behind the partition name. Partitions of type CF or CF/OS are prefixed with an *. For example, *D3F (C) or *IRD6 (C) denote coupling facility partitions in the candidate list.

DESTINATION PROCESSOR ID Is the name of the processor the destination channel path is defined for.

DESTINATION TYPE-MODEL Is the type-model of the destination processor.

SOURCE CNTRL UNIT Is the number of the CF control unit used for the source CF channel path connection.

SOURCE DEVICE NUM,RANGE Are the numbers of the CF devices and ranges of device groups defined for the source CF channel path connections via the source CF control unit.

DESTINATION CNTRL UNIT Is the number of the CF control unit used for the destination CF channel path connection.

DESTINATION DEVICE NUM,RANGE Are the numbers of the CF devices and ranges of device groups used for the destination CF channel path connections via the destination CF control unit.

CNTL TYPE Indicates the type of the connecting control unit(s).

Control Unit Summary Report

```
                                        CONTROL UNIT SUMMARY REPORT                  TIME: 16:12  DATE: 2012-10-21  PAGE G-   1
  CONTROL UNIT         SERIAL                                                                                                LOGICAL
 NUMBER  TYPE-MODEL    NUMBER       DESCRIPTION                                  CONNECTED SWITCH ID.PORT NUMBER            PATHS
 ______________________ __________   ___________________________________  |__.__|__.__|__.__|__.__|__.__|__.__|__.__|__.__| _______
  0003   OSC                         CU for OSC Channels
  0070   OSN
  0120   OSA                         for all native MVS (also NETMVS)
  0480   3480          11333        TAPES 0480 CT1 BL6                   1A.CB
  04B0   FCP                         Open FCP 16
  0900   1750                        DS6K1 (0900-094F)             80   17.54 17.58 17.5C 17.60                                72
  0950   1750                        DS6K1 (0950-098F)             80   17.54 17.58 17.5C 17.60                                72
  0B20   2105          11111        ESS22 B20 CU2 (3390-3/27)VSE 152   17.45 17.49                                            34
  0BC0   2105          11111        ESS22 BC0 CU4 (3390-mix) VSE 144   17.45 17.49                                            34
  0C50   2105          11111        ESS22 C50 CU5 (3390-mix) VSE 176   17.45 17.49                                            34
  0D80   2107          11222        DS8K0 CU0(D80-DCF) 3390-MIX   80   17.44 17.48 17.4C 17.50                               424
  0DD0   2107          11222        DS8K0 CU1(DD0-E1F) 3390-MIX   80   17.44 17.48 17.4C 17.50                               424
  0E20   2107          11222        DS8K0 CU2(E20-E3F) 3390-54    32   17.44 17.48 17.4C 17.50                               424
  0E40   2107          11222        DS8K0 CU3(E40-E5F) 3390-54    32   17.44 17.48 17.4C 17.50                                 0
  0E60   2105          11111        ESS22 E60 CU0 (3390-9)   VSE  96   17.45 17.49                                             0
  0EC0   2105          11111        ESS22 EC0 CU1 (3390-3/27)VSE 152   17.45 17.49                                             0
  0F60   2105          11111        ESS22 F60 CU3 (3390-65)  VSE  64   17.45 17.49                                             0
  1010   2032                        McData ED-6064 z/OS                  10.FE
  1011   2032                        McData ED-6140 z/OS                  11.FE
  1028   FCTC          H053E3F      FCTC H05LP04 to H05LP11 + TRX1
  102A   FCTC          H053E3F2     FCTC H05LP30 to H05LP31
  1128   FCTC          H053E3F      FCTC H05LP04 to H05LP11
  112A   FCTC          H053E3F2     FCTC H05LP30 to H05LP31
  112B   FCTC          H053E3F      FCTC H05LP04 to TRX1
  1240   OSA                         OSA (1240-125E,5F)
```

Figure 280. Control Unit Summary Report

CONNECTED SWITCH ID.PORT NUMBER Describes where the CU is physically connected to (switch and port)

LOGICAL PATHS Displays the number of defined logical paths per control unit.

Control Unit Detail Report

The Control Unit Detail Report lists all control units defined in the currently accessed IODF, with their attributes and attachment information.

For each control unit all processors are shown, where the control unit is attached to. For each of those processors, all control units, that are part of the "logical control unit" the currently printed control unit belongs to, are printed. Also, the currently shown control unit is listed again to show information about switch connection, channel path attachment, and attached devices. The information about each logical control unit the currently printed control unit belongs to, is separated by a dotted line.

The switch connection information is shown in the Control Unit Detail Report even if no switch configuration is defined. For example:

If a control unit is connected to a switch, but no complete path is defined through the switch (that means, no valid path is defined through the switch, which allows a dynamic connection) the complete switch connection information with SWITCH ID, CU PN, and PR PN can be determined.

In case of chained switches, the first information in a print line is shown for the switch the control unit is connected to. The second set of switch information is for the switch that the channel path is connected to. Note that this is different from the Channel Path Detail report.

For each control unit belonging to a logical control unit, the channel path it is attached to, is printed together with the link address (if applicable).

For FICON cascade switching, the link address will be shown as a two-byte number. If a path from the control unit is via cascaded FICON switches, the link between the FICON switches is not shown. Instead, the control unit port of the switch connected to the control unit and the CHPID port of the switch connected to the channel path are shown. If no port connections are defined, switch data is extracted from the dynamic switch and the link address. Port IDs are shown as one-byte port addresses.

The 'DEVICE' column shows the devices which are attached to the control unit printed under column 'CU IN LCU'. If the control unit is attached to more than one channel path, the information about the attached devices is printed together with the last printed channel path. The devices attached to a control unit are grouped according to consecutive number. The report shows the starting device number and range of the device group.

Columns 'LOG. PATHS PER CU' and 'LOGICAL PATHS PER CU PORT' display the number of defined logical paths.

```
                                 CONTROL UNIT DETAIL REPORT                    TIME: 16:12  DATE: 2012-10-21  PAGE H-   2
                                LOG.                                     -CHAINED/CASC-                                  LOGICAL
  CONTROL UNIT        PROCESSOR. PATHS   CU IN        CU-  SWITCH  CU  PR  SWITCH  CU  PR   CHPID .     -- DEVICE --  PATHS PER
NUMBER  TYPE-MODEL    CSS ID     PER CU   LCU   IOCL  ADD   ID    PN  PN    ID    PN  PN   LINK ADDR   NUMBER,RANGE  CU PORT
_____________________ __________ ______  _____ ____ ___ ______ __  __  ______ __  __  _________  ____________  ________
 0950   1750         PROC03.1      4    0950          3    17   5C         14        52   35 . 685C                   20
                                                        17   60         14        4E   41 . 6860     0950,80       20
                      ---------------------------------------------------------------------------------------------------
                      PROC03.2      4    0950          3    17   5C         14        52   35 . 685C                   20
                                                        17   60         14        4E   41 . 6860     0950,80       20
 ---------------------------------------------------------------------------------------------------------------------------
 0B20   2105          PROC03.0      2    0B20          2    17   45         14        52   35 . 6845                   27
                                                        17   49         14        4E   41 . 6849     0B20,152      27
                      ---------------------------------------------------------------------------------------------------
                      PROC03.1      2    0B20          2    17   45         14        52   35 . 6845                   27
                                                        17   49         14        4E   41 . 6849     0B20,152      27
                      ---------------------------------------------------------------------------------------------------
                      PROC03.2      4    0B20          2    17   45         14        52   35 . 6845                   27
                                                        17   49         14        4E   41 . 6849     0B20,152      27
                      ---------------------------------------------------------------------------------------------------
                      PROC03.3      2    0B20          2    17   45         14        52   35 . 6845                   27
                                                        17   49         14        4E   41 . 6849     0B20,152      27
 ---------------------------------------------------------------------------------------------------------------------------
 0BC0   2105          PROC03.0      2    0BC0          4    17   45         14        52   35 . 6845                   18
                                                        17   49         14        4E   41 . 6849     0BC0,144      18
                      ---------------------------------------------------------------------------------------------------
                      PROC03.1      2    0BC0          4    17   45         14        52   35 . 6845                   18
                                                        17   49         14        4E   41 . 6849     0BC0,144      18
                      ---------------------------------------------------------------------------------------------------
                      PROC03.2      4    0BC0          4    17   45         14        52   35 . 6845                   18
                                                        17   49         14        4E   41 . 6849     0BC0,144      18
                      ---------------------------------------------------------------------------------------------------
                      PROC03.3      2    0BC0          4    17   45         14        52   35 . 6845                   18
                                                        17   49         14        4E   41 . 6849     0BC0,144      18
 ---------------------------------------------------------------------------------------------------------------------------
 0C50   2105          PROC03.0      2    0C50          5    17   45         14        52   35 . 6845                    9
                                                        17   49         14        4E   41 . 6849     0C50,170       9
                      ---------------------------------------------------------------------------------------------------
                      PROC03.1      2    0C50          5    17   45         14        52   35 . 6845                    9
                                                        17   49         14        4E   41 . 6849     0C50,170       9
                      ---------------------------------------------------------------------------------------------------
                      PROC03.2      4    0C50          5    17   45         14        52   35 . 6845                    9
                                                        17   49         14        4E   41 . 6849     0C50,170       9
                      ---------------------------------------------------------------------------------------------------
                      PROC03.3      2    0C50          5    17   45         14        52   35 . 6845                    9
                                                        17   49         14        4E   41 . 6849     0C50,170       9
 ---------------------------------------------------------------------------------------------------------------------------
```

Figure 281. Control Unit Detail Report

Table 24. Description of the columns in the Control Unit Detail Report

Column name	Description
PROCESSOR.CSS ID	Designates the processors, and in case of an XMP processor, the channel subsystem to which the CU is attached.
LOG. PATHS PER CU	Specifies the number of defined logical paths for a control unit per channel subsystem.
CU IN LCU	Designates which CUs belong to the logical CU.
IOCL	Designates I/O concurrency level (same as SHARED in IOCP). Specifies the level of concurrency of I/O requests that the parallel channel path allows for the control unit (CU). **1** One I/O request at a time. (SHARED=Y) **2** Multiple I/O requests at a time. (SHARED=N)
CU-ADD	Designates the CU address.
SWITCH ID	Designates the switch the CU is connected to.
CU PN	Designates the port the CU is physically connected to.
PR PN	Designates the entry port of the channel (except in the case of chained switches)
CHAINED/CASC (SWITCH ID, CU PN, PR PN)	Designates a possible second switch the CHPID is connected to.
CHPID . LINK ADDR	Designates the channel path and the one- or two-byte link address to which the control unit is connected. *n*(*) in this column indicates that the control unit is connected to *n* managed channel paths.
DEVICE NUMBER,RANGE	Specifies information about the devices that are attached to the processors by the control unit.
LOGICAL PATHS PER CU PORT	Specifies the number of defined logical paths for all control units connected to a specific port.

Device Summary Report

The Device Summary Report gives you an overview of the devices defined in the currently accessed IODF and their attaching control units. The devices are grouped according to the same characteristics. The report shows the starting device number and the range of the group.

For multi-exposure devices, the base devices are grouped separately from the non-base exposure devices.

```
                                   DEVICE SUMMARY REPORT                          TIME: 16:04  DATE: 2012-10-21  PAGE I-   2
 --- DEVICE ---    DEVICE                                                 SERIAL                                                PPRC
  NUMBER,RANGE    TYPE-MODEL            ATTACHING CONTROL UNITS           NUMBER      DESCRIPTION                       VOLSER  USE
 ____________  ____________  |____|____|____|____|____|____|____|____|  __________  ________________________________ ______  ____
    0080,16       3174        0080                                                    Merian SNA Connection
    0090,2        RS6K        0110
    0092,2        RS6K        0112
    0094,2        RS6K        0114
    0096,2        RS6K        0116
    01C0          3270-X      01C0                                                    Console Real and Virt.
    01C1,31       3270-X      01C0                                                    Terminal
    2100,25       3390A       2124
    2200,25       3390B       2126                                                                                              U
    2300,25       3390B       2126                                                                                              D
    2400,25       3390B       2128                                                                                              D
    0300,32       9345        300A 300B
    0320,32       9345        320A 320B
    0340,32       9345        340A 340B                                               Real Dasd (9345 340-35f)          MVSLIB
    0360,32       9345        360A 360B                                               Real Dasd (9345 360-37f)          TSO001
```

Figure 282. Device Summary Report

Device Detail Report

The Device Detail Report lists all devices defined in the currently accessed IODF, with their attributes and attachment information. Each device is shown with the processors to which it is attached. The device - processor attachment attributes are also listed. If applicable, the subchannel set where the device is located, is also shown in column SS. If not applicable, this column shows a blank.

For each processor the device is attached to, the CUs for the attachment to the processor, as well as the channel path(s) the CU is attached to, are also listed.

The starting device number and the range of subsequent device numbers are shown in one row. A range value of 1 is omitted.

The Device Detail Report shows a partition matrix which indicates whether a logical partition of a corresponding processor has access to the device either via the channel path access list or the channel path candidate list, and whether a partition is excluded or included via the device candidate list. Devices with a null-device candidate list are excluded from the report.

At the end of the report, for SMP processors, the totals for the following items are listed for each processor:

- CHPIDS
- PHYSICAL CONTROL UNITS
- SUBCHANNELS
- LOGICAL CONTROL UNITS

For the CHPID total, the report lists separate values for the total shared and the total unshared. For the physical CU total, HCD reports the total shared (those attaching to shared channel paths) and the total unshared.

For the subchannel and logical CU totals, the report lists separate values for the shared, unshared, and additional unshared counts that are, respectively, assigned and unassigned to a logical partition. The shared count is the total number assigned to shared channel paths. The generated for LPAR unshared count is the total that would have been generated for a basic IOCDS. The additional unshared count contains the unshared values that were generated for the LPAR IOCDS.

The TOTAL value is the total that would have been contained in the generated IOCDS. The HSA TOTAL is the total that will exist in the HSA after POR. At the completion of POR, the HSA may contain more subchannels and logical CUs than does the IOCDS.

For XMP processors, the following totals are reported:

- CHPIDS
- PHYSICAL CONTROL UNITS
- DEVICES
- LOGICAL CONTROL UNITS

The column CSS TOTAL lists the number of CHPIDs, physical and logical control units and the maximum number of devices that are currently defined for that channel subsystem.

The column IOCDS TOTAL lists the number of CHPIDs, physical and logical control units and the maximum number of devices without definitions caused by over-defined CHPIDs.

Columns HSA TOTAL and HSA LIMIT are not applicable for XMP processors.

The column USER LIMIT lists the maximum number of devices defined by the user for that channel subsystem.

The column SUPPORTED LIMIT lists the maximum number of CHPIDs, physical and logical control units and the maximum number of devices that are supported for the processor for that channel subsystem.

```
                                    DEVICE DETAIL REPORT                        TIME: 13:33  DATE: 2012-10-21  PAGE J-   1
DEVICE      DEVICE        PROCESSOR. SS UNIT TIME STA PREFERRED      CNTL UNIT     CHPID.          PARTITION NUMBERS
NUMBER     TYPE-MODEL     CSS ID        ADDR OUT  DET   CHPID    PORT NUMBER CUADD LINK     |1|2|3|4|5|6|7|8|9|A|B|C|D|E|F|  SIDE
_________ ____________    __________ __ ____ ___ ___ _________  ____ ______ _____ __ _____ _________________________________  ____
0000,8     3390A          GOLDENE1.0  0  00   NO  YES                0000        00       |A| |A| | | | | |-| | | | | |A|
                                                                                 01       |A| |A| | | | | |-| | | | | |A|
                                                                                 02       |A| |A| | | | | |-| | | | | |A|
                          GOLDENE1.1  0  00   NO  YES                0000        00       |A| |A| | | | | |A| | | | | |A|
                                                                                 02       |A| |A| | | | | |A| | | | | |A|
                          GOLDENE1.2  0  00   NO  YES                0000        00       | | | | |C|A| | | | | | | | |
                                                                                 01       | | | | |C|A| | | | | | | | |
                          GOLDENE1.3  0  00   NO  YES                0000        00       | |-| | |-| | | | | | | |A| |
-------------------------------------------------------------------------------------------------------------------------------
…
-------------------------------------------------------------------------------------------------------------------------------
0020,16    3380A          GOLDENE1.0  1  30   NO  YES                0000        00       |A| |A| | | | | |A| | | | | |A|
                                                                                 01       |A| |A| | | | | |A| | | | | |A|
                                                                                 02       |A| |A| | | | | |A| | | | | |A|
                          GOLDENE1.1  1  30   NO  YES                0000        00       |A| |A| | | | | |A| | | | | |-|
                                                                                 02       |A| |A| | | | | |A| | | | | |-|
                          GOLDENE1.2  1  30   NO  YES                0000        00       | | | | |C|A| | | | | | | | |
                                                                                 01       | | | | |C|A| | | | | | | | |
                          GOLDENE1.3  1  30   NO  YES                0000        00       | |-| | |-| | | |+| | | | |A| |
-------------------------------------------------------------------------------------------------------------------------------
                                    DEVICE DETAIL REPORT                        TIME: 13:33  DATE: 2012-10-21  PAGE J-   2
    LEGEND FOR PARTITION NUMBERS FIELD:
    ___________________________________
     A     - PARTITION IS IN CHPID'S ACCESS LIST
     C     - PARTITION IS IN CHPID'S CANDIDATE LIST ONLY
     BLANK - PARTITION IS NOT IN CHPID'S ACCESS OR CANDIDATE LIST
     -     - PARTITION IS IN CHPID'S ACCESS OR CANDIDATE LIST BUT PARTITION IS EXCLUDED FROM DEVICE'S CANDIDATE LIST
     +     - PARTITION IS NOT IN CHPID'S ACCESS OR CANDIDATE LIST BUT PARTITION IS INCLUDED IN DEVICE'S CANDIDATE LIST
                                    DEVICE DETAIL REPORT                        TIME: 13:33  DATE: 2012-10-21  PAGE J-   3
    PROCESSOR: GOLDENE1
      CSS ID:    0
          PARTITION
       NUMBER    NAME
       ______    ________
         1       GECSS01X
         3       GECSS03X
         9       GECSS09X
         F       GECSS0FX


       TOTALS FOR CHPIDS, DEVICES AND CONTROL UNITS

                                          CSS     IOCDS    USER     SUPPORTED
                                         TOTAL    TOTAL    LIMIT      LIMIT
                                         _____    _____    _____    _________
       CHPIDS ________________________       3        3      N/A          256
       PHYSICAL CONTROL UNITS _______        1        1      N/A         8192
       DEVICES IN SUBCHANNEL SET 1__        32       32     1000        64512
       DEVICES IN SUBCHANNEL SET 2__        32       32      300        65535
       LOGICAL CONTROL UNITS ________        1        1      N/A         4096
```

Figure 283. Device Detail Report

Switch reports

The following switch reports are available:

- “Switch Summary Report” on page 349
- “Switch Detail Report” on page 349
- “Switch Configuration Summary Report” on page 350
- “Switch Configuration Detail Report” on page 350

Switch Summary Report

```
                                SWITCH SUMMARY REPORT                                TIME: 14:54  DATE: 2012-10-21  PAGE K-   1
SWITCH                                SERIAL                                         CU        DEVICE    INSTALLED
  ID       TYPE             ADDR     NUMBER        DESCRIPTION                       NUMBER    NUMBER    PORTS
______     _____________    ____     __________    ______________________________    ______    ______    _________
  21       2032              41                     switch address 41 fabric a                                 33
  98       9033                      55-9999       First switch                       0098      0098        9
  99       9032                      55-8888      Second switch                       0099      0099       29
```

Figure 284. Switch Summary Report

ADDR Shows the switch address, if available.

CU NUMBER Shows all switch control units attached to the switch CU port of the switch.

DEVICE NUMBER Shows all switch devices defined for a switch.

Switch Detail Report

If the switch is connected to an XMP processor, the processor ID is qualified with the channel subsystem ID. A spanned channel path is suffixed with an asterisk (*).

```
                                    SWITCH DETAIL REPORT                        TIME: 10:53  DATE: 2012-10-21  PAGE L-   3
    SWITCH ID  01   TYPE  9032-3
                                                   ------------- CONNECTION -----------------
    PORT     PORT NAME                            UNIT  UNIT ID            UNIT TYPE           OCCUPIED
    ____     ________________________________     ____________________________________________   ________
     AE                                            CU   053E              3490                NO
    ------------------------------------------------------------------------------------------------------
     AF      CHAIN_FROM_99                         SW   99       PORT  F0  9033                NO
    ------------------------------------------------------------------------------------------------------
     B0      CU_400                                CU   0400              3190                NO
    ------------------------------------------------------------------------------------------------------
     B1      PROCA_CP18                                                                        YES
    ------------------------------------------------------------------------------------------------------
     B2      PROCA_CP19                                                                        YES
    ------------------------------------------------------------------------------------------------------
     B3                                            CU   0900              3990                NO
    ------------------------------------------------------------------------------------------------------
     B4                                            PR   G29.1    CHPID 32  2084-C24           NO
                                                   CU   1060              SCTC
    ------------------------------------------------------------------------------------------------------
```

Figure 285. Switch Detail Report

CONNECTION UNIT Specifies the type of the unit the port is connected to.
PR = Processor, CU = Control Unit, SW = Switch

OCCUPIED Indicates a port connection external to the IODF.

Switch Configuration Summary Report

```
                                    SWITCH CONFIGURATION SUMMARY REPORT            TIME: 17:24  DATE: 2012-10-21  PAGE M-   1
SWITCH         SWITCH         CONFIG      DEFAULT
  ID            TYPE            ID        CONNECTION     CONFIGURATION DESCRIPTION
------      --------------    --------     ----------     --------------------------------
  98        9033              BASIC        ALLOW          night-shift configuration
  99        9032              BASIC2       ALLOW
```

Figure 286. Switch Configuration Summary Report

DEFAULT CONNECTION Indicates what state a potential dynamic connection may have (allow or prohibit).

Switch Configuration Detail Report

The Switch Configuration Detail Report lists all supported ports of a switch with their dynamic connection attributes.

```
                                    SWITCH CONFIGURATION DETAIL REPORT             TIME: 14:59  DATE: 2012-10-21  PAGE N-   1
    SWITCH      SWITCH       CONFIGURATION   DEFAULT      INSTALLED
      ID         TYPE              ID        CONNECTION   PORTS
    ______   _____________   _____________   __________   _________
      00     9032-5            SW00ID00      ALLOW          29
PORT  PORT NAME                  BLOCKED  DEDICATED  ALLOWED CONNECTIONS            PROHIBITED CONNECTIONS
____  ________________________  _______   _________  __________________________      ____________________________

 04   PR EVA.0    CHP 00 2084   NO                   05-0A,0C-1F                     0B
 05   PR EVA.0    CHP 01 2084   NO                   04,06-1F
 06   CU 0000            2105   NO                   04-05,07-1F
 07   PR EVA.0    CHP 08        NO          10       04-06,08-1F
 08   PR R31SMP   CHP 00 2066   NO                   04-07,09-1F
 09   PR EVA.0    CHP 09        NO          0F       04-08,0A-1F
 0A   PR EVA.0    CHP 10 2084   NO                   04-09,0B-1F
 0B   SW 01       PO  04 9032   NO                   05-0A,0C-1F                     04
 0C   PR EVA.0    CHP 02 2084   NO                   04-0B,0D-1F
 0D   CU 0003            3490   NO                   04-0C,0E-1F
 0E   CU 0005            2105   NO                   04-0D,0F-1F
 0F   SW 01       PO  05        NO          09       04-0E,10-1F
 10   SW 01       PO  06        NO          07       04-0F,11-1F
 11                             NO                   04-10,12-1F
 12                             NO                   04-11,13-1F
```

Figure 287. Switch Configuration Detail Report

Operating System reports

The following operating system reports are available:

- “Operating System Summary Report” on page 351
- “MVS Device Report” on page 351
- “MVS Device Detail Report” on page 352
- “Eligible Device Table Report” on page 352

- “NIP Console Report” on page 353
- “VM Device Report” on page 353
- “VM Device Detail Report” on page 354
- “VM Console Report” on page 354

Operating System Summary Report

```
                                    OPERATING SYSTEM SUMMARY REPORT                 TIME: 13:37  DATE: 2012-10-21  PAGE O-   1

OPERATING                                                                  D/R SITE
SYSTEM ID   TYPE        GEN    DESCRIPTION                                 OS ID

--------    --------    ---    -------------------------------             --------
OPSYS01     MVS                MVS operating system                        OPSYS01D
OPSYS02     VM                 VM operating system
OPSYS01D    MVS         YES    generated for OPSYS01
```

Figure 288. Operating System Summary Report

MVS Device Report

The MVS Device Report gives an overview of the devices defined to an MVS-type operating system in the currently accessed IODF.

The devices are grouped according to same characteristics. The report shows the starting device number and the range of a group.

```
                                        MVS DEVICE REPORT                           TIME: 13:27  DATE: 2012-10-21  PAGE P-   1
   OPERATING SYSTEM CONFIGURATION ID:  OS000001
DEV#,RANGE  TYPE-MODEL   SS  BASE  UCB-TYPE  ERP-NAME  DDT-NAME  MLT-NAME  OPT  UIM-NAME  ATI  AL  SH  SW  MX  MI

_________ _____________ __  ____  ________  ________  ________  ________  ___  ________  ___  __  __  __  __  __
0000,16    3390A         0        3010200F  IECVDERP  IGGDDTA1  IEAMLT02       CBDUS002   00          Y
0010,16    3390A         1        3010200F  IECVDERP  IGGDDTA1  IEAMLT02       CBDUS002   00          Y
0020,16    3380A         0        3010200E  IECVDERP  IGGDDT01  IEAMLT02       CBDUS002   00          Y
0020,16    3380A         1        3010200E  IECVDERP  IGGDDT01  IEAMLT02       CBDUS002   00          Y
                                        MVS DEVICE REPORT                           TIME: 13:27  DATE: 2012-10-21  PAGE P-   2
        KEY            KEY DESCRIPTION
        ---            ---------------
        DEV#,RANGE  -  DEVICE NUMBER, COUNT OF DEVICES (DECIMAL)
        TYPE-MODEL  -  DEVICE NAME
        SS          -  SUBCHANNEL SET ID
        BASE        -  BASE DEVICE NUMBER FOR MULTIPLE EXPOSURE DEVICES
        UCB-TYPE    -  UCB TYPE BYTES
        ERP-NAME    -  ERROR RECOVERY PROGRAM
        DDT-NAME    -  DEVICE DESCRIPTOR TABLE
        MLT-NAME    -  MODULE LIST TABLE
        OPT         -  OPTIONAL MLT INDICATOR
        UIM-NAME    -  UNIT INFORMATION MODULE SUPPORTING THE DEVICE
        ATI         -  ATTENTION TABLE INDEX (UCBATI)
        AL          -  ALTERNATE CONTROL UNIT (UCBALTCU)
        SH          -  SHARED UP OPTION (UCBSHRUP)
        SW          -  DEVICE CAN BE SWAPPED BY DDR (UCBSWAPF)
        MX          -  DEVICE HAS MULTIPLE EXPOSURES (UCBMTPXP)
        MI          -  MIH PROCESSING SHOULD BE BYPASSED (UCBMIHPB)
        O           -  MLT IS OPTIONAL
        Y           -  DEVICE SUPPORTS THIS FEATURE
        BLANK       -  DEVICE DOES NOT SUPPORT THIS FEATURE

                TOTAL NUMBER OF DEVICES BY CLASS
                --------------------------------
        CLASS NAME             CLASS TYPE    DEVICE COUNT
        ----------             ----------    ------------
        TAPE                       80               0
        COMMUNICATION DEVICES      40               0
        C-T-C                      41               0
        DASD                       20              64
        GRAPHICS                   10               0
        UNIT RECORD                08               0
        CHARACTER READERS          04               0
        TOTAL NUMBER OF I/O DEVICES DEFINED BY THIS I/O CONFIGURATION       64
```

Figure 289. MVS Device Report

MVS Device Detail Report

```
                                    MVS DEVICE DETAIL REPORT                    TIME: 15:11  DATE: 2012-10-21  PAGE Q-   1
OPERATING SYSTEM CONFIGURATION ID:  OS000001
--- DEVICE ---      DEVICE
 NUMBER,RANGE    TYPE - MODEL    SS    PARAMETER                                        FEATURE
_____________    ____________    __    ________________________________________         ___________________________________
   0000,16       3390A            0    WLMPAV=YES
-----------------------------------------------------------------------------------------------------------------------------
   0010,16       3390A            1    WLMPAV=YES
-----------------------------------------------------------------------------------------------------------------------------
   0020,16       3380A            1    WLMPAV=YES
-----------------------------------------------------------------------------------------------------------------------------
   0020,16       3380A            0    WLMPAV=YES
-----------------------------------------------------------------------------------------------------------------------------
   0040,8        3380A            1    WLMPAV=NO
-----------------------------------------------------------------------------------------------------------------------------
   0048,8        3380A            1    WLMPAV=YES
-----------------------------------------------------------------------------------------------------------------------------
   0100,8        3390B                 OFFLINE=NO,DYNAMIC=YES,LOCANY=YES,             SHARED
                                       WLMPAV=YES
-----------------------------------------------------------------------------------------------------------------------------
   FFFE          3179                  OFFLINE=NO,DYNAMIC=YES,LOCANY=YES              DOCHAR
-----------------------------------------------------------------------------------------------------------------------------
   FFFF          3179                  OFFLINE=YES,DYNAMIC=YES,LOCANY=YES             DOCHAR
-----------------------------------------------------------------------------------------------------------------------------
```

Figure 290. MVS Device Detail Report

PARAMETER Shows the parameter values specified for the devices. If you do not specify "Yes" or "No" for devices that support the dynamic capability, the DYNAMIC parameter will not be displayed.

FEATURE Shows the features given to these devices.

Eligible Device Table Report

```
                                          E D T   REPORT                          TIME: 14:40  DATE: 2012-10-21  PAGE R-   1
   OPERATING SYSTEM CONFIGURATION ID:  OPSYS01
   EDT IDENTIFIER: A1   DESCRIPTION: special
                                        AFFINITY  ALLOCATION   ASSOCIATED
 NAME        NAME TYPE  VIO  TOKEN  PREF   INDEX    DEVICE TYPE  GENERICS                DEVICE NUMBER LIST
 ---------   ---------  ---  -----  ----  --------  -----------  ----------  ---------------------------------------------
 3390        GENERIC                 280    FFFF     3010200F                 01D1-01D8
 -----------------------------------------------------------------------------------------------------------------------------
 3480        GENERIC                1100    0008     78008080                 00C1
 -----------------------------------------------------------------------------------------------------------------------------
 3277-2      GENERIC                3800    FFFF     12001009                 0001
 -----------------------------------------------------------------------------------------------------------------------------
 SWCH        GENERIC                0500    FFFF     0000083A                 0098
 -----------------------------------------------------------------------------------------------------------------------------
 ES001       ESOTERIC               3800    FFFF     12001009    3277-2       0001
 -----------------------------------------------------------------------------------------------------------------------------
 ES002       ESOTERIC                280    FFFF     3010200F    3390         01D1-01D8
                                    1100    0008     78008080    3480         00C1
 -----------------------------------------------------------------------------------------------------------------------------
 3400-9      G/GENERIC              1100    0008     78008080    3480         00C1
 -----------------------------------------------------------------------------------------------------------------------------
 SYSALLDA    G/ESOTERIC              280    FFFF     3010200F    3390         01D1-01D8
 -----------------------------------------------------------------------------------------------------------------------------
 SYS3480R    G/ESOTERIC             1100    0008     78008080    3480         00C1
```

Figure 291. Eligible Device Table Report

NAME TYPE describes the type of the device groups contained in the EDT:

GENERIC
generic device type group

ESOTERIC
esoteric device group

G/GENERIC
system generated generic device type group

G/ESOTERIC
system generated esoteric device group

VIO Eligible for virtual I/O, designates temporary data sets that exist in paging storage only.

PREF Preference value, indicates the order the system should follow when attempting allocation.

AFFINITY INDEX This index is used by the system allocation programs to determine which devices have affinity to each other. Devices have affinity if either of the following statements are true:

- The devices have the same affinity index.
- The affinity index for one of the devices is a subset of the other devices' affinity index.

An affinity index is a subset of another if both of the following statements are true:

- Neither index has a value of X'FFFF'.
- One or more bits in one index are set to a binary "one" and one or more corresponding bits in the other index are set to a binary "one".

ALLOCATION DEVICE TYPE UCB device table for allocation entry.

ASSOCIATED GENERICS Indicates the relation of a device type to generics.

DEVICE NUMBER LISTS Lists the devices that are included in the group. The devices are grouped according to subsequent device numbers. The report shows the range of the device group.

Note: Device ranges in a subchannel set with a subchannel set ID > 0 are displayed in a 5-digit notation with the leading digit indicating the subchannel set ID. For example, a device range 1000-103F located in subchannel set 1 is shown as 11000-1103F. A device range 2000-203F in subchannel set 0 is shown as 2000-203F.

NIP Console Report

```
                                    N I P C O N   REPORT                          TIME: 13:37  DATE: 2012-10-21  PAGE S-   1
OPERATING SYSTEM CONFIGURATION ID:  OPSYS01
                                  NIP CONSOLE DEVICES
                                  -------------------
                       DEVICE #        TYPE-MODEL
                       --------       -------------
                       0001           3278-3
```

Figure 292. NIP Console Report

VM Device Report

The VM Device Report gives an overview of the devices defined to a VM operating system in the currently accessed IODF.

The devices are grouped according to same characteristics. The report shows the starting device number and the range of a group.

```
                                        VM  DEVICE REPORT                              TIME: 13:48  DATE: 2012-10-21  PAGE P-   1
   OPERATING SYSTEM CONFIGURATION ID:  VMXXL001
DEV#,RANGE   TYPE-MODEL   SS       BASE     CLASS                       VIRT   UIM-NAME   MX   DO   US
___________  __________   __       ____     ________________            ____   _________  __   __   __
0002         3279-2                                                     Y
01D1,4       3390
0020,16      3380A         0                DASD                                CBDUS258

                                        VM  DEVICE REPORT                              TIME: 13:48  DATE: 2012-10-21  PAGE P-   2
        KEY            KEY DESCRIPTION
        ---            ---------------
        DEV#,RANGE  -  DEVICE NUMBER, COUNT OF DEVICES (DECIMAL)
        TYPE-MODEL  -  DEVICE TYPE AND MODEL
        SS          -  SUBCHANNEL SET ID
        BASE        -  BASE DEVICE NUMBER FOR MULTIPLE EXPOSURE DEVICES
        CLASS       -  VM DEVICE CLASS
        VIRT        -  DEVICE IS NOT DEFINED TO CHANNEL SUBSYSTEM
        UIM-NAME    -  UNIT INFORMATION MODULE SUPPORTING THE DEVICE
        MX          -  DEVICE HAS MULTIPLE EXPOSURES
        DO          -  DEVICE IS SUPPORTED DEDICATED-ONLY
        US          -  DEVICE IS UNSUPPORTED
        Y           -  DEVICE SUPPORTS THIS FEATURE
        BLANK       -  DEVICE DOES NOT SUPPORT THIS FEATURE

                TOTAL NUMBER OF DEVICES BY CLASS
                --------------------------------
        CLASS NAME                          DEVICE COUNT
        ----------                          ------------
        TERMINAL                                   0
        GRAPHIC                                    0
        REMOTE GRAPHIC                             0
        SPOOL                                      0
        TAPE                                       0
        DASD                                      16
        SPECIAL                                    0
        TOTAL NUMBER OF I/O DEVICES DEFINED BY THIS I/O CONFIGURATION       16
```

Figure 293. VM Device Report

VM Device Detail Report

```
                                        VM  DEVICE DETAIL REPORT                    TIME: 15:06  DATE: 2012-10-21  PAGE Q-   1
 OPERATING SYSTEM CONFIGURATION ID:  OPSYS02
 --- DEVICE ---      DEVICE
  NUMBER,RANGE    TYPE - MODEL    SS    PARAMETER                                  FEATURE
 _____________    ____________    __    _________________________________          ______________________________________
    0000,16       3390A            0    WLMPAV=YES
 ---------------------------------------------------------------------------------------------------------------------
    0100          3278-3                OFFLINE=NO,OFFLINE=NO
 ---------------------------------------------------------------------------------------------------------------------
    0200          3279-2                OFFLINE=NO,OFFLINE=NO
 ---------------------------------------------------------------------------------------------------------------------
    02D1,4        3390                  OFFLINE=NO,OFFLINE=NO,OFFLINE=NO
 ---------------------------------------------------------------------------------------------------------------------
```

Figure 294. VM Device Detail Report

PARAMETER Shows the parameter values specified for the devices.

FEATURE Shows the features given to these devices.

VM Console Report

```
                                        VM CONSOLE REPORT                           TIME: 13:45  DATE: 2012-10-21  PAGE S-   1
OPERATING SYSTEM CONFIGURATION ID:  OPSYS02
                                   VM CONSOLE DEVICES
                                   ------------------
                        DEVICE #        TYPE-MODEL
                        --------        -----------
                        0002           3279-2         PRIMARY SYSTEM CONSOLE
```

Figure 295. VM Console Report

CTC Connection Report

```
                                        CTC CONNECTION REPORT                      TIME: 14:28  DATE: 2012-10-21  PAGE T-   1
        ------------------------- SIDE 1 ------------------------ - COMMON -- ---------------------------- SIDE 2 ------------------------
        PROC.CSSID PART.    DEVICE --CHPID--- ENTRY -----CU----- --DEVICE--- PROC.CSSID PART.    DEVICE ---CHPID-- ENTRY -----CU-----
 LINE               NAME     NUM OS ID MOD TYP SW PO ID   LA   #  RNG TYPE UA            NAME     NUM OS ID MOD TYP SW PO ID   LA   #
------ ---------- -------- ------ -- --- --- -- -- ---- ---- -- --- ---- -- ---------- -------- ------ -- --- --- -- -- ---- ---- --
     1  G33XMP.0   TCSS0LP2 8004 Y 20 SHR FC  FF 06 8004 0007 22   2 FCTC 20 G33XMP.2   TCSS2LP2 8000 Y 21 SHR FC  FF 07 8000 0006 2
     2  G33XMP.0   TCSS0LP2 8006 Y 20 SHR FC  FF 06 8006 0007 25   2 FCTC 20 G33XMP.2   TCSS2LP5 8000 Y 21 SHR FC  FF 07 8000 0006 2
     3  G33XMP.0   TCSS0LP2 9000 Y 20 SHR FC  FF 06 9000 0005 4    2 FCTC 00 R31SMP     RAPOS4   9004 Y 10 SHR FC  FF 05 9004 0006 2
     4  G33XMP.0   TCSS0LP2 9002 Y 20 SHR FC  FF 06 9002 0005 9    2 FCTC 00 R31SMP     RAPMIX9  9004 Y 10 SHR FC  FF 05 9004 0006 2
------ ---------- -------- ------ -- --- --- -- -- ---- ---- -- --- ---- -- ---------- -------- ------ -- --- --- -- -- ---- ---- --
     5  G33XMP.0   TCSS0LP3 8004 Y 20 SHR FC  FF 06 8004 0007 22   2 FCTC 20 G33XMP.2   TCSS2LP2 8002 Y 21 SHR FC  FF 07 8002 0006 3
     6  G33XMP.0   TCSS0LP3 8006 Y 20 SHR FC  FF 06 8006 0007 25   2 FCTC 20 G33XMP.2   TCSS2LP5 8002 Y 21 SHR FC  FF 07 8002 0006 3
     7  G33XMP.0   TCSS0LP3 9000 Y 20 SHR FC  FF 06 9000 0005 4    2 FCTC 00 R31SMP     RAPOS4   9006 Y 10 SHR FC  FF 05 9006 0006 3
     8  G33XMP.0   TCSS0LP3 9002 Y 20 SHR FC  FF 06 9002 0005 9    2 FCTC 00 R31SMP     RAPMIX9  9006 Y 10 SHR FC  FF 05 9006 0006 3
------ ---------- -------- ------ -- --- --- -- -- ---- ---- -- --- ---- -- ---------- -------- ------ -- --- --- -- -- ---- ---- --
     9  G33XMP.2   TCSS2LP2 8000 Y 21 SHR FC  FF 07 8000 0006 2    2 FCTC 20 G33XMP.0   TCSS0LP2 8004 Y 20 SHR FC  FF 06 8004 0007 22
    10  G33XMP.2   TCSS2LP2 8002 Y 21 SHR FC  FF 07 8002 0006 3    2 FCTC 20 G33XMP.0   TCSS0LP3 8004 Y 20 SHR FC  FF 06 8004 0007 22
------ ---------- -------- ------ -- --- --- -- -- ---- ---- -- --- ---- -- ---------- -------- ------ -- --- --- -- -- ---- ---- --
    11  G33XMP.2   TCSS2LP5 8000 Y 21 SHR FC  FF 07 8000 0006 2    2 FCTC 20 G33XMP.0   TCSS0LP2 8006 Y 20 SHR FC  FF 06 8006 0007 25
    12  G33XMP.2   TCSS2LP5 8002 Y 21 SHR FC  FF 07 8002 0006 3    2 FCTC 20 G33XMP.0   TCSS0LP3 8006 Y 20 SHR FC  FF 06 8006 0007 25
------ ---------- -------- ------ -- --- --- -- -- ---- ---- -- --- ---- -- ---------- -------- ------ -- --- --- -- -- ---- ---- --
    13  R31SMP     RAPMIX9  9004 Y 10 SHR FC  FF 05 9004 0006 2    2 FCTC 00 G33XMP.0   TCSS0LP2 9002 Y 20 SHR FC  FF 06 9002 0005 9
    14  R31SMP     RAPMIX9  9006 Y 10 SHR FC  FF 05 9006 0006 3    2 FCTC 00 G33XMP.0   TCSS0LP3 9002 Y 20 SHR FC  FF 06 9002 0005 9
------ ---------- -------- ------ -- --- --- -- -- ---- ---- -- --- ---- -- ---------- -------- ------ -- --- --- -- -- ---- ---- --
    15  R31SMP     RAPOS4   9004 Y 10 SHR FC  FF 05 9004 0006 2    2 FCTC 00 G33XMP.0   TCSS0LP2 9000 Y 20 SHR FC  FF 06 9000 0005 4
    16  R31SMP     RAPOS4   9006 Y 10 SHR FC  FF 05 9006 0006 3    2 FCTC 00 G33XMP.0   TCSS0LP3 9000 Y 20 SHR FC  FF 06 9000 0005 4
                                        CTC CONNECTION REPORT                      TIME: 14:28  DATE: 2012-10-21  PAGE T-   2
         KEY                 KEY DESCRIPTION
         ---                 ---------------
         LINE NR          -  LINE NUMBER USED TO REFER TO CTC MESSAGES - A MESSAGE IS INDICATED BY AN ASTERIX (*)
         SIDE 1 / SIDE 2
         PROC.CSSID       -  PROCESSOR ID RESPECTIVELY CHANNEL SUBSYSTEM ID
         PARTITION NAME   -  PARTITION NAME
         DEVICE NUM       -  DEVICE NUMBER
         DEVICE OS        -  INDICATION, IF FIRST DEVICE OF RANGE IS DEFINED TO AN OPERATING SYSTEM
         CHPID ID         -  CHANNEL PATH ID IN CHANNEL SUBSYSTEM
         CHPID MOD        -  CHANNEL PATH MODE
         CHPID TYPE       -  CHANNEL PATH TYPE
         ENTRY SW         -  ENTRY SWITCH OF THE CHANNEL PATH
         ENTRY PO         -  ENTRY PORT OF THE CHANNEL PATH
         CU ID            -  CONTROL UNIT NUMBER
         CU LA            -  LINK ADDRESS OF CONTROL UNIT RELATED TO THE CHANNEL PATH
         CU #             -  LOGICAL ADDRESS (CUADD) RELATED TO THE PROCESSOR
         COMMON
         DEVICE RNG       -  DEVICE RANGE FOR DEVICES ON SIDE 1 AND SIDE 2
         DEVICE TYPE      -  DEVICE TYPE COMMON TO DEVICES ON SIDE 1 AND SIDE 2 (IF MESSAGE G751 THEN DEVICE TYPE OF SIDE 1)
         DEVICE UA        -  UNIT ADDRESS OF DEVICES RELATED TO THE PROCESSOR (COMMON TO SIDE 1 AND SIDE 2)
```

Figure 296. CTC Connection Report

Diagnostic messages

The following example shows you messages that might be returned with the report. The diagnostic messages are sorted by severity. For each connection, HCD displays only one messages, even if the connection includes several errors. You first have to correct the first error before the next message is displayed. HCD displays the messages according to the priority as described in “Displaying diagnostic messages” on page 141.

```
                                        CTC CONNECTION REPORT                      TIME: 17:42  DATE: 2012-10-21
PAGE U-   3


  LINE  SEV MSGID     MESSAGE TEXT

     1   E  CBDG750I  Logical address (CUADD) is specified for CU 1010, but CHPID 20 of processor PROC001A is
                      not defined as shared.

     3   E  CBDG750I  Logical address (CUADD) is specified for CU 1010, but CHPID 20 of processor PROC001A is
                      not defined as shared.


     4   E  CBDG752I  Channel path type error. CHPID 20 of processor PROC001A is connected to a CHPID 11 of
                      processor PROC002 with the same type.

     8   E  CBDG752I  Channel path type error. CHPID 11 of processor PROC002 is connected to a CHPID 20 of processor
                      PROC001A with the same type.

    11   E  CBDG751I  Device type of device 0805 connected to processor PROC002, CHPID 22 does not match with device
                      type of device 0405 on the other side.

    13   E  CBDG750I  Logical address (CUADD) is specified for CU 0108, but CHPID 21 of processor PROC003 is
                      not defined as shared.

    18   E  CBDG750I  Logical address (CUADD) is specified for CU 0108, but CHPID 21 of processor PROC003 is
                      not defined as shared.

    21   E  CBDG751I  Device type of device 0405 connected to processor PROC003, CHPID 11 does not match with device
                      type of device 0805 on the other side.

     6   W  CBDG753I  Wrap around connection detected for processor PROC002 (partition - none -) via CHPID 11 and
                      CHPID 13.

     7   W  CBDG753I  Wrap around connection detected for processor PROC002 (partition - none -) via CHPID 13 and
                      CHPID 11.


    15   W  CBDG754I  HCD cannot determine connection. No control units and devices match to processor PROC003,
                      partition PART1, CU 1012 and device 1012.

    19   W  CBDG754I  HCD cannot determine connection. No control units and devices match to processor PROC003,
                      partition PART2, CU 1012 and device 1012.

     5   I  CBDG757I  HCD cannot determine connection. CHPID 10 of processor PROC002 has no dynamic switch defined.

    14   I  CBDG756I  HCD cannot determine connection. CHPID 24 of processor PROC002 is connected via chained
                      switches.


 Total Messages  Terminating     Error     Warning  Informational
         14                        8          4           2
```

Figure 297. Sample of Diagnostic Messages coming with the CTC connection report

I/O Path Report

The I/O Path report shows the physically sensed I/O paths (with physical types) of the active system compared with the logical definitions of the paths (also the object types) of a specific IODF.

- If the sensed I/O path reports a switch, the verification assumes that this is a dynamic switch. It checks whether the defined I/O path in the IODF contains a dynamic switch, and whether the link address corresponds to the output port of the sensed data. If the IODF contains defined switch data, it is verified whether the defined data correspond to the sensed data. If dedicated switches are defined, the I/O Path report always shows differences in the D column.
- When you compare between the sensed and defined data, not all fields are used to determine if there is a difference between the two sides (either an *, or @ is shown in the column D of the report). The data that is used are the CHPID, the control unit number, the device number, and the switch information of the defined dynamic switches and the sensed dynamic switches.

The I/O path verification checks if the actual system contains the same paths as in the defined I/O configuration. Differences are indicated in the I/O Path report in column D with the following characters:

1

The * indicates that differences are found between the sensed and the defined I/O path. Either

- only sensed data is available, or
- only defined data in the IODF is available, or
- the sensed and defined switch data differ.

2

The C indicates that the defined and the sensed I/O path are the same, but the defined I/O path is defined to the CSS only.

3

An @ is a combination of * and C, and indicates that differences are found between the sensed and the defined I/O path, and that the I/O path is defined to the CSS only.

4

The O indicates that the defined I/O path in the IODF is defined to the operating system only.

```
                                                I/O PATH REPORT                        TIME: 14:06    DATE: 2012-10-21  PAGE V-   1
 SYSTEM:           SYSPLEX:                            PROCESSOR: G29       CSS ID: 0   PARTITION: TRX1      OS CONFIG: XXY
<--------------------- Sensed data ---------------------->  <--------------------------- IODF data ------------------------------> D
--CHP--- DYN.SWITCH CONTROL UNIT- ------DEVICE------- PATH  -CHP-- -SWITCH- CHAINED- DYNSW   --CONTROL UNIT-- ------DEVICE-------
ID TYPE  PI SW PO   NUMB TYPE     NUMBER   TYPE     O STAT  ID TYP PI SW PO PI SW PO DS LA   NUMB TYPE     L  NUMBER   TYPE     S
-- ----- -- -- --   ---- -------- -------- -------- - ----  -- --- -- -- -- -- -- -- ---- ---- -------- -- -------- -------- - -
00 OSA              0230 9676     0230,2                     00 OSA                          0230 OSA         0230,2   OSA
00 OSA              0230 9676     023F     9676-2            00 OSA                          0230 OSA         023F     OSAD
                                                             04 CFS                          FFF7 CFS         FF00,2   CFS        @ 3
04 CFS              FFF7 9672-E03 FFE2,2   CFS               05 CFS                          FFF8 CFS        FFE6,2   CFS         C 2
05 CFS              FFF8 9672-E03 FFE6,2   CFS               09 BL                           0910 3880-3     0910,8   3380        *
                                                             09 BL                           0920 3880-3      0920,8   3380        * 1
10 CTC_S EE AC C3   4010 9672-R72 4010,4   9672-CTC         10 CTC EE AC C3          AC C3   4010 SCTC     1 4010,4   SCTC
10 CTC_S EE AC C3   4020 9672-R72 4020,4   9672-CTC         10 CTC EE AC C3          AC C3   4020 SCTC     2 4020,4   SCTC
10 CTC_S EE AC CB   4030 9672-R72 4030,4   9672-CTC         10 CTC EE AC CB          AC CB   4030 SCTC     1 4030,4   SCTC
10 CTC_S EE AC CB   4040 9672-R72 4040,4   9672-CTC                                                                        * 1
11 CNC_S D0 AE FE   001E 9032-3   001E     9032-3           11 CNC D0 AE FE          AE FE   001E 9032-3     001E     9032-3
11 CNC_S D0 AE D8   2000 9394-3   2000,14  9395-B13         11 CNC D0 AE D8          AE D8   2000 3990-6     2000,14  3390
11 CNC_S D0 AE D8   2000 9394-3   200E,18                   11 CNC D0 AE D8          AE D8   2000 3990-6     200E,18  3390
12 CNC_?                                            OFFL  12 CNC
13 CNC_?                                            OFFL  13 CNC
14 CNC_S ED AA D8   0B30 3490-A20 0B30,16  3490-B40         14 CNC ED AA D8          AA D8   0B30 3490       0B30,16  3490
14 CNC_S ED AA EA   0B50 3490-C2A 0B50,2   3490-C2A         14 CNC ED AA EA          AA EA   0B50 3490       0B50,2   3490
                                                             15 CVC                           0BA0 3480       0BA0,16  3480        *
15 CNC_S 10 01 FA   2540 2105-E20 2540,37  2105     Y       15 CNC 10 01             01 FA   2540 2105      5 2540,37  3390B      C
                                                             15 CNC 10 01             01 FA   2540 2105      5 2565,27  3390A    0 @
15 CNC_S 10 01 FB   3A40 2105-F20 3A40,32  2105     Y       15 CNC 10 01             01 FB   3A40 2105      5 3A40,32  3390B      C
15 CNC_S 10 01 FB   3A40 2105-F20 3A60,4             Y       15 CNC 10 01             01 FB   3A40 2105      5 3A60,4   3390B      C
                                                             15 CNC 10 01             01 FB   3A40 2105      5 3A64,28  3390A    0 @
15 CNC_S 10 01 DA   3E80 2105-E20 3E80,13  2105     Y       15 CNC 10 01             01 DA   3E80 2105      A 3E80,13  3390B      C
                                                             15 CNC 10 01             01 DA   3E80 2105      A 3EA0,32  3390A    1 @
18 CNC_S E5 AA FE   001A 9032     001A     9032              18 CNC E5 AA FE          AA FE   001A 9032       001A     9032
18 CNC_S E5 AA E4   0CC0 3990-6   0CC0,8   3390-A28          18 CNC E5 AA E4          AA E4   0CC0 3990-6     0CC0,8   3390
18 CNC_S E5 AA E4   0CC0 3990-6   0CC8,24  3390-B2C          18 CNC E5 AA E4          AA E4   0CC0 3990-6     0CC8,24  3390
19 CNC_S F5 AA FE   001A 9032     001A     9032              19 CNC F5 AA FE          AA FE   001A 9032       001A     9032
1C CNC_S            0F00          0F00,2                     1C CNC                   77 96   0F00 3174     1 0F00,2   3791L      * 1
1C CNC_S            0F02          0F02,2                     1C CNC                   77 95   0F02 3174     2 0F02,2   3791L      *
20 OSA              0210 9676     0214,11                    20 OSA                          0210 OSA        0214,11  OSA
20 OSA              0210 9676     021F     9676-2            20 OSA                          0210 OSA        021F     OSAD
2C CNC_S ED AC D8   5100          5100,4                     2C CNC ED AC D8          AC D8   5100 SCTC     2 5100,4   SCTC
2F CNC_S A0 01 81   200A 3990-6   0219,2   3390-B3C                                                                        *
2F CNC_S A0 01 81   200A 3990-6   021B             Y UNKN                                                                  *
40 CNC_S 8F 70 E5   9101 3990-L03 9100,4   3380-AK4         40 CNC B6 6F 8F 8F 70 E5 70 E5   9101 3990       9100,4   3380
                                                                                              01B0 3172       01B0,16  3172        O 4
                                                                                              0640 3990       0640,8   3380        O
                                                                                              0740 SCTC       0740,16  SCTC        O
```

Figure 298. Example and Legend of an I/O Path Report (Part 1 of 2)

```
                                                I/O PATH REPORT                        TIME: 09:53    DATE: 2016-04-27  PAGE V-   7
          KEY                 KEY DESCRIPTION
          ---                 ---------------
          SENSED DATA      -  I/O CONFIGURATION DATA RETRIEVED BY SENSING I/O
          CHP ID           -  SENSED CHANNEL PATH ID
          CHP TYPE         -  SENSED CHANNEL PATH TYPE
          DYN.SWITCH PI    -  SENSED DYN. SWITCH INPUT PORT (CHANNEL PATH SIDE)
          DYN.SWITCH SW    -  SENSED DYNAMIC SWITCH ID
          DYN.SWITCH PO    -  SENSED DYN. SWITCH OUTPUT PORT (CONTROL UNIT SIDE)
          CONTROL UNIT NUMB-  SENSED CONTROL UNIT NUMBER
          CONTROL UNIT TYPE-  SENSED CONTROL UNIT TYPE
          DEVICE NUMBER    -  SENSED DEVICE NUMBER AND RANGE
          DEVICE TYPE      -  SENSED DEVICE TYPE
          DEVICE O         -  SENSED DEVICE(S) OFFLINE INDICATOR
                              Y - OFFLINE
                              BLANK - NOT OFFLINE
          PATH STAT        -  IF BLANK, SENSED I/O PATH IS ONLINE
                              IF OFFL, SENSED I/O PATH IS OFFLINE
                              IF UNKN, STATUS OF SENSED I/O PATH IS UNKNOWN
                              IF ONLINE, SINGLE POINT OF FAILURE INDICATION
                              POS 1: BLANK, U, OR NUMBER BETWEEN 3 AND 8
                                3: BOOK,     4: CAGE,   5: FAILOVER DOMAIN
                                6: FANOUT,  7: DOMAIN, 8: SECONDARY STI/STI
                                U: NOT EXECUTED
                              POS 2: C, IF CU I/F SHARE SINGLE POINT OF FAILURE
                                     N, IF CU I/F NOT CHECKED
                              POS 3: P, IF DEVICE HAS ONLY ONE PATH ONLINE
                              POS 4: S, IF ALL PATHES GO THROUGH ONE SWITCH
          IODF DATA        -  DATA RETRIEVED FROM IODF
          CHP ID           -  DEFINED CHANNEL PATH ID
          CHP TYPE         -  DEFINED CHANNEL PATH TYPE
          SWITCH PI        -  DEFINED SWITCH INPUT PORT (CHANNEL PATH SIDE)
          SWITCH SW        -  DEFINED SWITCH ID
          SWITCH PO        -  DEFINED SWITCH OUTPUT PORT (CONTROL UNIT SIDE)
          CHAINED PI       -  DEFINED CHAINED SWITCH INPUT PORT
          CHAINED SW       -  DEFINED CHAINED SWITCH ID
          CHAINED PO       -  DEFINED CHAINED SWITCH OUTPUT PORT
          DYNSW SW         -  DEFINED DYNAMIC SWITCH FOR CHANNEL PATH
          DYNSW LA         -  DEFINED DYNAMIC LINK ADDRESS FOR CONTROL UNIT
          CONTROL UNIT NUMB-  DEFINED CONTROL UNIT NUMBER
          CONTROL UNIT TYPE-  DEFINED CONTROL UNIT TYPE
          CONTROL UNIT L   -  DEFINED CONTROL UNIT LOGICAL ADDRESS
          DEVICE NUMBER    -  DEFINED DEVICE NUMBER AND RANGE
          DEVICE TYPE      -  DEFINED DEVICE TYPE
          DEVICE S         -  DEFINED DEVICE SUBCHANNEL SET ID
          D                -  DIFFERENCES FOUND
                              IF C, ONLY DEFINED TO CHANNEL SUBSYSTEM
                              IF O, ONLY DEFINED TO OS CONFIGURATION
                              IF *, DIFFERENCES WERE FOUND BETWEEN THE 2 SIDES
                              IF @, INDICATES C AND * FROM ABOVE
```

Figure 299. Example and Legend of an I/O Path Report (Part 2 of 2)

DYN.SWITCH
Contains either the switch information for the dynamic switch in the path or the dedicated switch if there is no dynamic switch.

PATH STAT
Represents the status of the I/O path between the CHPID and the devices that it is connected to.

blank
Represents the situations where the sensed I/O path is online. For more information, refer to "The I/O path list" on page 194.

OFFL
Represents the situations where there is no I/O path to be found or when the I/O path is offline.

UNKN
Represents the situations where the I/O path is currently in a pending state or when z/OS is running as a guest on a z/VM system and the path status can not be obtained from the system.

Supported hardware report

The Supported Hardware Report shows the actual status of the hardware supported in your installation. It shows the following supported hardware:

- Processors
- Control units
- Devices including:

  Device characteristics
  Control unit attachments
- MVS devices including:

  Device capabilities
  Parameters (with selection values) / features
- VM devices including

  device capabilities
  parameters/features

The following figure shows you an example of a supported hardware report. The example may differ from the report you get on your system, because the data depend on the installed processor support modules and UIMs.

```
                                        SUPPORTED HARDWARE - PROCESSORS                TIME: 10:24  DATE: 2019-03-04  PAGE X-   1
TYPE-MODEL MOD SUPLEVID IOCP SYSTEM    SUPPORTED CHPID TYPES                WI RI DP FCT   CHPID CU   LCU  SUBCH LPAR CSS SCHS
__________ ___ ________ ____ ______    ____________________________________ __ __ __ ___   ____ ____ ____ _____ ____ __ ____
2094-S08   213 H050331  ICP  2094,1    CNC,CTC,CVC,CBY,FC,FCV,OSD,OSE,      Y  Y  Y  N    1024 8192 4096 65280 60   4  2
                                       CFP,CBP,ICP,IQD,FCP,OSC,OSN
2094-S08   216 H070331  ICP  2094,1    CNC,CTC,CVC,CBY,FC,FCV,OSD,OSE,      Y  Y  Y  N    1024 8192 4096 65280 60   4  2
                                       CFP,CBP,ICP,IQD,FCP,OSC,OSN,CIB
2094-S18   213 H050331  ICP  2094,1    CNC,CTC,CVC,CBY,FC,FCV,OSD,OSE,      Y  Y  Y  N    1024 8192 4096 65280 60   4  2
                                       CFP,CBP,ICP,IQD,FCP,OSC,OSN
2094-S18   216 H070331  ICP  2094,1    CNC,CTC,CVC,CBY,FC,FCV,OSD,OSE,      Y  Y  Y  N    1024 8192 4096 65280 60   4  2
                                       CFP,CBP,ICP,IQD,FCP,OSC,OSN,CIB
2094-S28   213 H050331  ICP  2094,1    CNC,CTC,CVC,CBY,FC,FCV,OSD,OSE,      Y  Y  Y  N    1024 8192 4096 65280 60   4  2
                                       CFP,CBP,ICP,IQD,FCP,OSC,OSN
2094-S28   216 H070331  ICP  2094,1    CNC,CTC,CVC,CBY,FC,FCV,OSD,OSE,      Y  Y  Y  N    1024 8192 4096 65280 60   4  2
                                       CFP,CBP,ICP,IQD,FCP,OSC,OSN,CIB
2094-S38   213 H050331  ICP  2094,1    CNC,CTC,CVC,CBY,FC,FCV,OSD,OSE,      Y  Y  Y  N    1024 8192 4096 65280 60   4  2
                                       CFP,CBP,ICP,IQD,FCP,OSC,OSN
2094-S38   216 H070331  ICP  2094,1    CNC,CTC,CVC,CBY,FC,FCV,OSD,OSE,      Y  Y  Y  N    1024 8192 4096 65280 60   4  2
                                       CFP,CBP,ICP,IQD,FCP,OSC,OSN,CIB
2094-S54   213 H050331  ICP  2094,1    CNC,CTC,CVC,CBY,FC,FCV,OSD,OSE,      Y  Y  Y  N    1024 8192 4096 65280 60   4  2
                                       CFP,CBP,ICP,IQD,FCP,OSC,OSN
2094-S54   216 H070331  ICP  2094,1    CNC,CTC,CVC,CBY,FC,FCV,OSD,OSE,      Y  Y  Y  N    1024 8192 4096 65280 60   4  2
                                       CFP,CBP,ICP,IQD,FCP,OSC,OSN,CIB
2096-R07   214 H060930  ICP  2096,1    CNC,CTC,CVC,CBY,FC,FCV,OSD,OSE,      Y  Y  Y  N     512 8192 4096 65280 15   2  2
                                       CFP,CBP,ICP,IQD,FCP,OSC,OSN
2096-R07   218 H070331  ICP  2096,1    CNC,CTC,CVC,CBY,FC,FCV,OSD,OSE,      Y  Y  Y  N     512 8192 4096 65280 15   2  2
                                       CFP,CBP,ICP,IQD,FCP,OSC,OSN,CIB
2096-S07   215 H060930  ICP  2096,1    CNC,CTC,CVC,CBY,FC,FCV,OSD,OSE,      Y  Y  Y  N     512 8192 4096 65280 30   2  2
                                       CFP,CBP,ICP,IQD,FCP,OSC,OSN
2096-S07   219 H070331  ICP  2096,1    CNC,CTC,CVC,CBY,FC,FCV,OSD,OSE,      Y  Y  Y  N     512 8192 4096 65280 30   2  2
                                       CFP,CBP,ICP,IQD,FCP,OSC,OSN,CIB
2097-E12   217 H080130  ICP  2097,1    CNC,CTC,CVC,CBY,FC,FCV,OSD,OSE,      Y  Y  Y  N    1024 8192 4096 65280 60   4  2
                                       CFP,CBP,ICP,IQD,FCP,OSC,OSN,CIB
2097-E12   241 H080131  ICP  2097,1    CNC,CTC,CVC,CBY,FC,FCV,OSD,OSE,      Y  Y  Y  N    1024 8192 4096 65280 60   4  2
                                       CFP,CBP,ICP,IQD,FCP,OSC,OSN,CIB
2097-E26   217 H080130  ICP  2097,1    CNC,CTC,CVC,CBY,FC,FCV,OSD,OSE,      Y  Y  Y  N    1024 8192 4096 65280 60   4  2
                                       CFP,CBP,ICP,IQD,FCP,OSC,OSN,CIB
2097-E26   241 H080131  ICP  2097,1    CNC,CTC,CVC,CBY,FC,FCV,OSD,OSE,      Y  Y  Y  N    1024 8192 4096 65280 60   4  2
                                       CFP,CBP,ICP,IQD,FCP,OSC,OSN,CIB
2097-E40   217 H080130  ICP  2097,1    CNC,CTC,CVC,CBY,FC,FCV,OSD,OSE,      Y  Y  Y  N    1024 8192 4096 65280 60   4  2
                                       CFP,CBP,ICP,IQD,FCP,OSC,OSN,CIB
2097-E40   241 H080131  ICP  2097,1    CNC,CTC,CVC,CBY,FC,FCV,OSD,OSE,      Y  Y  Y  N    1024 8192 4096 65280 60   4  2
                                       CFP,CBP,ICP,IQD,FCP,OSC,OSN,CIB
2097-E56   217 H080130  ICP  2097,1    CNC,CTC,CVC,CBY,FC,FCV,OSD,OSE,      Y  Y  Y  N    1024 8192 4096 65280 60   4  2
                                       CFP,CBP,ICP,IQD,FCP,OSC,OSN,CIB
2097-E56   241 H080131  ICP  2097,1    CNC,CTC,CVC,CBY,FC,FCV,OSD,OSE,      Y  Y  Y  N    1024 8192 4096 65280 60   4  2
                                       CFP,CBP,ICP,IQD,FCP,OSC,OSN,CIB
2097-E64   217 H080130  ICP  2097,1    CNC,CTC,CVC,CBY,FC,FCV,OSD,OSE,      Y  Y  Y  N    1024 8192 4096 65280 60   4  2
                                       CFP,CBP,ICP,IQD,FCP,OSC,OSN,CIB
2098-E10   240 H081130  ICP  2098,1    CNC,CTC,CVC,CBY,FC,FCV,OSD,OSE,      Y  Y  Y  N     512 8192 4096 65280 30   2  2
                                       CFP,CBP,ICP,IQD,FCP,OSC,OSN,CIB
2817-M15   242 H100331  ICP  2817,1    CNC,CTC,CVC,CBY,FC,OSD,OSE,CFP,      Y  Y  Y  N    1024 8192 4096 65280 60   4  3
                                       ICP,IQD,FCP,OSC,OSN,CIB,OSX,OSM
2817-M32   242 H100331  ICP  2817,1    CNC,CTC,CVC,CBY,FC,OSD,OSE,CFP,      Y  Y  Y  N    1024 8192 4096 65280 60   4  3
                                       ICP,IQD,FCP,OSC,OSN,CIB,OSX,OSM
2817-M49   242 H100331  ICP  2817,1    CNC,CTC,CVC,CBY,FC,OSD,OSE,CFP,      Y  Y  Y  N    1024 8192 4096 65280 60   4  3
                                       ICP,IQD,FCP,OSC,OSN,CIB,OSX,OSM
2817-M66   242 H100331  ICP  2817,1    CNC,CTC,CVC,CBY,FC,OSD,OSE,CFP,      Y  Y  Y  N    1024 8192 4096 65280 60   4  3
                                       ICP,IQD,FCP,OSC,OSN,CIB,OSX,OSM
2817-M80   242 H100331  ICP  2817,1    CNC,CTC,CVC,CBY,FC,OSD,OSE,CFP,      Y  Y  Y  N    1024 8192 4096 65280 60   4  3
                                       ICP,IQD,FCP,OSC,OSN,CIB,OSX,OSM
2818-M05   245 H110331  ICP  2818,1    CNC,CTC,CVC,CBY,FC,OSD,OSE,CFP,      Y  Y  Y  N     512 8192 4096 65280 30   2  2
                                       ICP,IQD,FCP,OSC,OSN,CIB,OSX,OSM
2818-M10   245 H110331  ICP  2818,1    CNC,CTC,CVC,CBY,FC,OSD,OSE,CFP,      Y  Y  Y  N     512 8192 4096 65280 30   2  2
                                       ICP,IQD,FCP,OSC,OSN,CIB,OSX,OSM
2827-HA1   244 H120331  ICP  2827,1    FC,OSD,OSE,CFP,ICP,IQD,FCP,OSC,      Y  Y  Y  N    1024 8192 4096 65280 60   4  3
                                       OSN,CIB,OSX,OSM
2827-HA1   247 H130331  ICP  2827,1    FC,OSD,OSE,CFP,ICP,IQD,FCP,OSC,      Y  Y  Y  Y    1024 8192 4096 65280 60   4  3
                                       OSN,CIB,OSX,OSM
2827-H20   244 H120331  ICP  2827,1    FC,OSD,OSE,CFP,ICP,IQD,FCP,OSC,      Y  Y  Y  N    1024 8192 4096 65280 60   4  3
                                       OSN,CIB,OSX,OSM
2827-H20   247 H130331  ICP  2827,1    FC,OSD,OSE,CFP,ICP,IQD,FCP,OSC,      Y  Y  Y  Y    1024 8192 4096 65280 60   4  3
                                       OSN,CIB,OSX,OSM
2827-H43   244 H120331  ICP  2827,1    FC,OSD,OSE,CFP,ICP,IQD,FCP,OSC,      Y  Y  Y  N    1024 8192 4096 65280 60   4  3
                                       OSN,CIB,OSX,OSM
2827-H43   247 H130331  ICP  2827,1    FC,OSD,OSE,CFP,ICP,IQD,FCP,OSC,      Y  Y  Y  Y    1024 8192 4096 65280 60   4  3
                                       OSN,CIB,OSX,OSM
2827-H66   244 H120331  ICP  2827,1    FC,OSD,OSE,CFP,ICP,IQD,FCP,OSC,      Y  Y  Y  N    1024 8192 4096 65280 60   4  3
                                       OSN,CIB,OSX,OSM
2827-H66   247 H130331  ICP  2827,1    FC,OSD,OSE,CFP,ICP,IQD,FCP,OSC,      Y  Y  Y  Y    1024 8192 4096 65280 60   4  3
                                       OSN,CIB,OSX,OSM
2827-H89   244 H120331  ICP  2827,1    FC,OSD,OSE,CFP,ICP,IQD,FCP,OSC,      Y  Y  Y  N    1024 8192 4096 65280 60   4  3
                                       OSN,CIB,OSX,OSM
2827-H89   247 H130331  ICP  2827,1    FC,OSD,OSE,CFP,ICP,IQD,FCP,OSC,      Y  Y  Y  Y    1024 8192 4096 65280 60   4  3
                                       OSN,CIB,OSX,OSM
2828-H06   248 H130331  ICP  2828,1    FC,OSD,OSE,CFP,ICP,IQD,FCP,OSC,      Y  Y  Y  Y     512 8192 4096 65280 30   2  2
                                       OSN,CIB,OSX,OSM
```

Figure 300. Supported Hardware Report (Part 1 of 23)

```
                                        SUPPORTED HARDWARE - PROCESSORS                TIME: 10:24  DATE: 2019-03-04  PAGE X-   2
TYPE-MODEL MOD SUPLEVID IOCP SYSTEM    SUPPORTED CHPID TYPES                 WI RI DP FCT   CHPID CU   LCU  SUBCH LPAR CSS SCHS
__________ ___ ________ ____ ________   ____________________________________  __ __ __ ___   _____ ____ ____ _____ ____ ___ ____
2828-H13   248 H130331 ICP  2828,1     FC,OSD,OSE,CFP,ICP,IQD,FCP,OSC,       Y  Y  Y  Y     512  8192 4096 65280  30   2    2
                                       OSN,CIB,OSX,OSM
2964-LC9   103 H160310  ICP  2964,1    FC,OSD,OSE,IQD,FCP,OSC,OSN,OSX,OSM    Y  Y  Y  Y    1536  8192 4096 65280  90   6    4
2964-LC9   104 H160930  ICP  2964,1    FC,OSD,OSE,IQD,FCP,OSC,OSN,OSX,OSM    Y  Y  Y  Y    1536  8192 4096 65280  90   6    4
2964-LE1   103 H160310  ICP  2964,1    FC,OSD,OSE,IQD,FCP,OSC,OSN,OSX,OSM    Y  Y  Y  Y    1536  8192 4096 65280  90   6    4
2964-LE1   104 H160930  ICP  2964,1    FC,OSD,OSE,IQD,FCP,OSC,OSN,OSX,OSM    Y  Y  Y  Y    1536  8192 4096 65280  90   6    4
2964-L30   103 H160310  ICP  2964,1    FC,OSD,OSE,IQD,FCP,OSC,OSN,OSX,OSM    Y  Y  Y  Y    1536  8192 4096 65280  90   6    4
2964-L30   104 H160930  ICP  2964,1    FC,OSD,OSE,IQD,FCP,OSC,OSN,OSX,OSM    Y  Y  Y  Y    1536  8192 4096 65280  90   6    4
2964-L63   103 H160310  ICP  2964,1    FC,OSD,OSE,IQD,FCP,OSC,OSN,OSX,OSM    Y  Y  Y  Y    1536  8192 4096 65280  90   6    4
2964-L63   104 H160930  ICP  2964,1    FC,OSD,OSE,IQD,FCP,OSC,OSN,OSX,OSM    Y  Y  Y  Y    1536  8192 4096 65280  90   6    4
2964-L96   103 H160310  ICP  2964,1    FC,OSD,OSE,IQD,FCP,OSC,OSN,OSX,OSM    Y  Y  Y  Y    1536  8192 4096 65280  90   6    4
2964-L96   104 H160930  ICP  2964,1    FC,OSD,OSE,IQD,FCP,OSC,OSN,OSX,OSM    Y  Y  Y  Y    1536  8192 4096 65280  90   6    4
2964-NC9   102 H160930  ICP  2964,1    FC,OSD,OSE,ICP,IQD,FCP,OSC,OSN,       Y  Y  Y  Y    1536  8192 4096 65280  90   6    4
                                       CIB,OSX,OSM,CS5
2964-NC9   250 H150111  ICP  2964,1    FC,OSD,OSE,ICP,IQD,FCP,OSC,OSN,       Y  Y  Y  Y    1024  8192 4096 65280  90   6    4
                                       CIB,OSX,OSM,CS5
2964-NC9   252 H160310  ICP  2964,1    FC,OSD,OSE,ICP,IQD,FCP,OSC,OSN,       Y  Y  Y  Y    1536  8192 4096 65280  90   6    4
                                       CIB,OSX,OSM,CS5
2964-NC9   255 H161231  ICP  2964,1    FC,OSD,OSE,ICP,IQD,FCP,OSC,OSN,       Y  Y  Y  Y    1536  8192 4096 65280  90   6    4
                                       CIB,OSX,OSM,CS5,CL5
2964-NE1   102 H160930  ICP  2964,1    FC,OSD,OSE,ICP,IQD,FCP,OSC,OSN,       Y  Y  Y  Y    1536  8192 4096 65280  90   6    4
                                       CIB,OSX,OSM,CS5
2964-NE1   250 H150111  ICP  2964,1    FC,OSD,OSE,ICP,IQD,FCP,OSC,OSN,       Y  Y  Y  Y    1024  8192 4096 65280  90   6    4
                                       CIB,OSX,OSM,CS5
2964-NE1   252 H160310  ICP  2964,1    FC,OSD,OSE,ICP,IQD,FCP,OSC,OSN,       Y  Y  Y  Y    1536  8192 4096 65280  90   6    4
                                       CIB,OSX,OSM,CS5
2964-NE1   255 H161231  ICP  2964,1    FC,OSD,OSE,ICP,IQD,FCP,OSC,OSN,       Y  Y  Y  Y    1536  8192 4096 65280  90   6    4
                                       CIB,OSX,OSM,CS5,CL5
2964-N30   102 H160930  ICP  2964,1    FC,OSD,OSE,ICP,IQD,FCP,OSC,OSN,       Y  Y  Y  Y    1536  8192 4096 65280  90   6    4
                                       CIB,OSX,OSM,CS5
2964-N30   250 H150111  ICP  2964,1    FC,OSD,OSE,ICP,IQD,FCP,OSC,OSN,       Y  Y  Y  Y    1024  8192 4096 65280  90   6    4
                                       CIB,OSX,OSM,CS5
2964-N30   252 H160310  ICP  2964,1    FC,OSD,OSE,ICP,IQD,FCP,OSC,OSN,       Y  Y  Y  Y    1536  8192 4096 65280  90   6    4
                                       CIB,OSX,OSM,CS5
2964-N30   255 H161231  ICP  2964,1    FC,OSD,OSE,ICP,IQD,FCP,OSC,OSN,       Y  Y  Y  Y    1536  8192 4096 65280  90   6    4
                                       CIB,OSX,OSM,CS5,CL5
2964-N63   102 H160930  ICP  2964,1    FC,OSD,OSE,ICP,IQD,FCP,OSC,OSN,       Y  Y  Y  Y    1536  8192 4096 65280  90   6    4
                                       CIB,OSX,OSM,CS5
2964-N63   250 H150111  ICP  2964,1    FC,OSD,OSE,ICP,IQD,FCP,OSC,OSN,       Y  Y  Y  Y    1024  8192 4096 65280  90   6    4
                                       CIB,OSX,OSM,CS5
2964-N63   252 H160310  ICP  2964,1    FC,OSD,OSE,ICP,IQD,FCP,OSC,OSN,       Y  Y  Y  Y    1536  8192 4096 65280  90   6    4
                                       CIB,OSX,OSM,CS5
2964-N63   255 H161231  ICP  2964,1    FC,OSD,OSE,ICP,IQD,FCP,OSC,OSN,       Y  Y  Y  Y    1536  8192 4096 65280  90   6    4
                                       CIB,OSX,OSM,CS5,CL5
2964-N96   102 H160930  ICP  2964,1    FC,OSD,OSE,ICP,IQD,FCP,OSC,OSN,       Y  Y  Y  Y    1536  8192 4096 65280  90   6    4
                                       CIB,OSX,OSM,CS5
2964-N96   250 H150111  ICP  2964,1    FC,OSD,OSE,ICP,IQD,FCP,OSC,OSN,       Y  Y  Y  Y    1024  8192 4096 65280  90   6    4
                                       CIB,OSX,OSM,CS5
2964-N96   252 H160310  ICP  2964,1    FC,OSD,OSE,ICP,IQD,FCP,OSC,OSN,       Y  Y  Y  Y    1536  8192 4096 65280  90   6    4
                                       CIB,OSX,OSM,CS5
2964-N96   255 H161231  ICP  2964,1    FC,OSD,OSE,ICP,IQD,FCP,OSC,OSN,       Y  Y  Y  Y    1536  8192 4096 65280  90   6    4
                                       CIB,OSX,OSM,CS5,CL5
2965-L10   108 H160310  ICP  2965,1    FC,OSD,OSE,IQD,FCP,OSC,OSN,OSX,OSM    Y  Y  Y  Y     768  8192 4096 65280  45   3    3
2965-L10   111 H160930  ICP  2965,1    FC,OSD,OSE,IQD,FCP,OSC,OSN,OSX,OSM    Y  Y  Y  Y     768  8192 4096 65280  45   3    3
2965-L20   108 H160310  ICP  2965,1    FC,OSD,OSE,IQD,FCP,OSC,OSN,OSX,OSM    Y  Y  Y  Y     768  8192 4096 65280  45   3    3
2965-L20   111 H160930  ICP  2965,1    FC,OSD,OSE,IQD,FCP,OSC,OSN,OSX,OSM    Y  Y  Y  Y     768  8192 4096 65280  45   3    3
2965-N10   109 H160930  ICP  2965,1    FC,OSD,OSE,ICP,IQD,FCP,OSC,OSN,       Y  Y  Y  Y     768  8192 4096 65280  45   3    3
                                       CIB,OSX,OSM,CS5
2965-N10   253 H160310  ICP  2965,1    FC,OSD,OSE,ICP,IQD,FCP,OSC,OSN,       Y  Y  Y  Y     768  8192 4096 65280  45   3    3
                                       CIB,OSX,OSM,CS5
2965-N10   256 H161231  ICP  2965,1    FC,OSD,OSE,ICP,IQD,FCP,OSC,OSN,       Y  Y  Y  Y     768  8192 4096 65280  45   3    3
                                       CIB,OSX,OSM,CS5,CL5
2965-N20   109 H160930  ICP  2965,1    FC,OSD,OSE,ICP,IQD,FCP,OSC,OSN,       Y  Y  Y  Y     768  8192 4096 65280  45   3    3
                                       CIB,OSX,OSM,CS5
2965-N20   253 H160310  ICP  2965,1    FC,OSD,OSE,ICP,IQD,FCP,OSC,OSN,       Y  Y  Y  Y     768  8192 4096 65280  45   3    3
                                       CIB,OSX,OSM,CS5
2965-N20   256 H161231  ICP  2965,1    FC,OSD,OSE,ICP,IQD,FCP,OSC,OSN,       Y  Y  Y  Y     768  8192 4096 65280  45   3    3
                                       CIB,OSX,OSM,CS5,CL5
3906-LM1   114 H170913  ICP  3906,1    FC,OSD,OSE,ICP,IQD,FCP,OSC,CIB,       Y  Y  Y  Y          8192 4096 65280  90   6    4
                                       OSX,OSM,CS5,CL5
3906-LM1   126 H180913  ICP  3906,1    FC,OSD,OSE,ICP,IQD,FCP,OSC,CIB,       Y  Y  Y  Y          8192 4096 65280  90   6    4
                                       OSX,OSM,CS5,CL5
3906-LM2   114 H170913  ICP  3906,1    FC,OSD,OSE,ICP,IQD,FCP,OSC,CIB,       Y  Y  Y  Y          8192 4096 65280  90   6    4
                                       OSX,OSM,CS5,CL5
3906-LM2   126 H180913  ICP  3906,1    FC,OSD,OSE,ICP,IQD,FCP,OSC,CIB,       Y  Y  Y  Y          8192 4096 65280  90   6    4
                                       OSX,OSM,CS5,CL5
3906-LM3   114 H170913  ICP  3906,1    FC,OSD,OSE,ICP,IQD,FCP,OSC,CIB,       Y  Y  Y  Y          8192 4096 65280  90   6    4
                                       OSX,OSM,CS5,CL5
3906-LM3   126 H180913  ICP  3906,1    FC,OSD,OSE,ICP,IQD,FCP,OSC,CIB,       Y  Y  Y  Y          8192 4096 65280  90   6    4
                                       OSX,OSM,CS5,CL5
3906-LM4   114 H170913  ICP  3906,1    FC,OSD,OSE,ICP,IQD,FCP,OSC,CIB,       Y  Y  Y  Y          8192 4096 65280  90   6    4
                                       OSX,OSM,CS5,CL5
3906-LM4   126 H180913  ICP  3906,1    FC,OSD,OSE,ICP,IQD,FCP,OSC,CIB,       Y  Y  Y  Y          8192 4096 65280  90   6    4
                                       OSX,OSM,CS5,CL5
```

Figure 301. Supported Hardware Report (Part 2 of 23)

```
                                        SUPPORTED HARDWARE - PROCESSORS                TIME: 10:24  DATE: 2019-03-04  PAGE X-   3
TYPE-MODEL MOD SUPLEVID IOCP SYSTEM    SUPPORTED CHPID TYPES                 WI RI DP FCT   CHPID CU   LCU  SUBCH LPAR CSS SCHS
__________ ___ ________ ____ ________   ____________________________________  __ __ __ ___   _____ ____ ____ _____ ____ ___ ____
3906-LM5   114 H170913  ICP  3906,1    FC,OSD,OSE,ICP,IQD,FCP,OSC,CIB,       Y  Y  Y  Y     ----- 8192 4096 65280  90   6    4
                                       OSX,OSM,CS5,CL5
3906-LM5   126 H180913  ICP  3906,1    FC,OSD,OSE,ICP,IQD,FCP,OSC,CIB,       Y  Y  Y  Y          8192 4096 65280  90   6    4
                                       OSX,OSM,CS5,CL5
3906-M01   113 H170913  ICP  3906,1    FC,OSD,OSE,ICP,IQD,FCP,OSC,CIB,       Y  Y  Y  Y          8192 4096 65280  90   6    4
                                       OSX,OSM,CS5,CL5
3906-M01   125 H180913  ICP  3906,1    FC,OSD,OSE,ICP,IQD,FCP,OSC,CIB,       Y  Y  Y  Y          8192 4096 65280  90   6    4
                                       OSX,OSM,CS5,CL5
3906-M02   113 H170913  ICP  3906,1    FC,OSD,OSE,ICP,IQD,FCP,OSC,CIB,       Y  Y  Y  Y          8192 4096 65280  90   6    4
                                       OSX,OSM,CS5,CL5
3906-M02   125 H180913  ICP  3906,1    FC,OSD,OSE,ICP,IQD,FCP,OSC,CIB,       Y  Y  Y  Y          8192 4096 65280  90   6    4
                                       OSX,OSM,CS5,CL5
3906-M03   113 H170913  ICP  3906,1    FC,OSD,OSE,ICP,IQD,FCP,OSC,CIB,       Y  Y  Y  Y          8192 4096 65280  90   6    4
                                       OSX,OSM,CS5,CL5
3906-M03   125 H180913  ICP  3906,1    FC,OSD,OSE,ICP,IQD,FCP,OSC,CIB,       Y  Y  Y  Y          8192 4096 65280  90   6    4
                                       OSX,OSM,CS5,CL5
3906-M04   113 H170913  ICP  3906,1    FC,OSD,OSE,ICP,IQD,FCP,OSC,CIB,       Y  Y  Y  Y          8192 4096 65280  90   6    4
                                       OSX,OSM,CS5,CL5
3906-M04   125 H180913  ICP  3906,1    FC,OSD,OSE,ICP,IQD,FCP,OSC,CIB,       Y  Y  Y  Y          8192 4096 65280  90   6    4
                                       OSX,OSM,CS5,CL5
3906-M05   113 H170913  ICP  3906,1    FC,OSD,OSE,ICP,IQD,FCP,OSC,CIB,       Y  Y  Y  Y          8192 4096 65280  90   6    4
                                       OSX,OSM,CS5,CL5
3906-M05   125 H180913  ICP  3906,1    FC,OSD,OSE,ICP,IQD,FCP,OSC,CIB,       Y  Y  Y  Y          8192 4096 65280  90   6    4
                                       OSX,OSM,CS5,CL5
3907-LR1   123 H180322  ICP  3907,1    FC,OSD,OSE,ICP,IQD,FCP,OSC,OSX,       Y  Y  Y  Y          8192 4096 65280  45   3    3
                                       OSM,CS5,CL5
3907-LR1   129 H180913  ICP  3907,1    FC,OSD,OSE,ICP,IQD,FCP,OSC,OSX,       Y  Y  Y  Y          8192 4096 65280  45   3    3
                                       OSM,CS5,CL5
3907-ZR1   122 H180322  ICP  3907,1    FC,OSD,OSE,ICP,IQD,FCP,OSC,OSX,       Y  Y  Y  Y          8192 4096 65280  45   3    3
                                       OSM,CS5,CL5
3907-ZR1   128 H180913  ICP  3907,1    FC,OSD,OSE,ICP,IQD,FCP,OSC,OSX,       Y  Y  Y  Y          8192 4096 65280  45   3    3
                                       OSM,CS5,CL5
```

Figure 302. Supported Hardware Report (Part 3 of 23)

```
                                        SUPPORTED HARDWARE - PROCESSORS              TIME: 10:24  DATE: 2019-03-04  PAGE X-   4
        KEY                        KEY DESCRIPTION
        ---                        ---------------
        TYPE-MODEL             -   SUPPORTED PROCESSOR TYPE
        MOD                    -   INDEX OF PROCESSOR SUPPORT MODULE
        SUPLEVID               -   SUPPORT LEVEL ID
        IOCP                   -   PREFIX OF IOCP PROGRAM FOR THIS SUPPORT LEVEL
        SYSTEM                 -   IOCP SYSTEM VALUE
        SUPPORTED CHPID TYPES  -   LIST OF CHANNEL PATH TYPES WHICH ARE SUPPORTED BY THIS CONTROL UNIT
        WI                     -   WRITE IOCDS REGARDLESS OF CPC TYPE
        RI                     -   RECEIVE IOCDS WRITTEN REGARDLESS OF CPC TYPE
        DP                     -   SUPPORT OF DYNAMIC PARTITIONS
        FCT                    -   SUPPORT OF PCIE FUNCTIONS
        CHPID                  -   MAXIMUM NUMBER OF SUPPORTED CHPIDS
        CU                     -   MAXIMUM NUMBER OF ATTACHABLE CONTROL UNITS
        LCU                    -   MAXIMUM NUMBER OF LOGICAL CONTROL UNITS (PER CHANNEL SUBSYSTEM)
        SUBCH                  -   MAXIMUM NUMBER OF SUBCHANNELS (PER CHANNEL SUBSYSTEM)
        LPAR                   -   MAXIMUM NUMBER OF LOGICAL PARTITIONS
        CSS                    -   MAXIMUM NUMBER OF CHANNEL SUBSYSTEMS (XMP PROCESSOR ONLY)
        SCHS                   -   MAXIMUM NUMBER OF SUBCHANNEL SETS
        Y                      -   PROCESSOR HAS THE CAPABILITY
        N                      -   CAPABILITY IS NOT AVAILABLE
```

Figure 303. Supported Hardware Report (Part 4 of 23)

```
                                        SUPPORTED HARDWARE - CONTROL UNITS  (1)       TIME: 10:24  DATE: 2019-03-04  PAGE X-   5
TYPE-MODEL    UIM U PROTCL DP IO SUPPORTED CHPID TYPES      ATTACHABLE DEVICES
============= === = ====== == == ========================== ==================================================================
AFP1          022 N D,S,S4 S  2  BL,BY,CNC,CVC,CBY,FC,FCV,
                                 EIO                        AFP1,AFP1-0,2710,3160,3170,3300,3825,3827,3828,3829,3831,3835,3900,3935,
                                                            4000,4100,4370
CTC           014 N D      D  2  BL,CVC,EIO                 CTC,CTCA
DUMMY         050 N D,S,S4 D  2  BL,BY,CNC,CTC,CVC,CBY,FCV,
                                 EIO                        DUMMY
FCP           254 N              FCP                        FCP
FCTC          014 N           2  FC                         FCTC
IQD           058 N              IQD                        IQD
NOCHECK       256 N D,S,S4 S  2  BL,BY,CNC,CTC,CVC,IOC,CBY,
                                 FC,FCV,EIO                 AFP1-0,BCTC,BSC1,BSC2,BSC3,CTC,CTCA,DUMMY,FBA,FB512,FCTC,HFGD,ICABSCA,
                                                            ICAELAN,ICAHDLC,ICAILAN,ICASDLC,ICATELE2,RS6K,SCTC,SWCH,TWX,WTTA,1030,
                                                            1050,1050X,115A,1287,1288,1403-N1,1403-2,1403-3,1403-5,1403-7,2032,
                                                            2250-3,2305-2,2501-B1,2501-B2,2540P-1,2540R-1,2701,2710,2740,2740C,
                                                            2741C,2741P,3088,3151,3160,3161,3162,3163,3167,3170,3172,3174,3178,3179,
                                                            3180,3180-1,3190,3191,3192,3192-F,3193,3194,3203-4,3203-5,3211,3215,
                                                            3250,3251,3262-13,3262-3,3262-5,3268-2,3270,3270-X,3272,3274,3277-1,
                                                            3277-2,3278-1,3278-2,3278-2A,3278-3,3278-4,3278-5,3279-S2B,3279-S3G,
                                                            3279-2,3279-2A,3279-2B,3279-2C,3279-2X,3279-3,3279-3A,3279-3B,3279-3X,
                                                            3284-1,3284-2,3286-1,3286-2,3287-1,3287-1C,3287-2,3287-2C,3288,3289-1,
                                                            3289-2,3290,3300,3330-1,3330-11,3330-2,3330V,3333-1,3333-11,3340,3344,
                                                            3350,3370,3375,3380,3380-CJ2,3380A,3380B,3390,3390A,3390B,3390D,3390S,
                                                            3420-3,3420-4,3420-5,3420-6,3420-7,3420-8,3422,3423,3424,3430,3471,3472,
                                                            3480,3481,3482,3483,3490,3505,3525,3540,3590,3704,3705,3720,3725,3737,
                                                            3745,3746,3767-1,3767-2,3791L,3800-1,3800-3,3800-6,3800-8,3812,3816,
                                                            3825,3827,3828,3829,3831,3835,3851,3886,3890,3895,3900,3935,3995,
                                                            3995-SDA,3995-151,3995-153,4000,4100,4224,4245,4248,4250,4370,5080,5081,
                                                            5210,6090,6091,6262,7171,7770-3,8232,83B3,9032,9032-3,9032-5,9033,
                                                            9332-40,9332-42,9332-60,9332-62,9335-B1,9336-10,9336-20,9345,9348-1
OSA           058 N              OSA,OSD,OSE                CONTROL,OSA,OSAD
OSC           058 N              OSC                        3215,3270-X,3286,3287,3287-1,3287-1C,3287-2,3287-2C
OSM           058 N              OSM                        OSA-M,OSAD
OSN           058 N              OSN                        OSAD,OSN,3745
OSX           058 N              OSX                        OSA-X,OSAD
RS6K          056 N D,S,S4 S4 2  BL,CNC,CVC,FCV,EIO         RS6K
RS6K-2        056 N           2  CNC,FCV                    RS6K
SCTC          014 N           2  CNC,CTC,FCV                BCTC,CTCA,SCTC
SWCH          051 Y           2  CNC,FCV                    SWCH
1287          032 N D      D  2  BL,BY,CVC,CBY,EIO          1287
1288          032 N D      D  2  BL,BY,CVC,CBY,EIO          1288
1750          002 Y S,S4   S  2  FC                         3380,3380A,3380B,3390,3390A,3390B,3390D,3390S
2032          051 Y           2  FC                         SWCH,2032
2105          002 Y S,S4   S  2  CNC,FC,FCV                 3380,3380A,3380B,3390,3390A,3390B,3390D,3390S
2107          002 Y S,S4   S  2  CNC,FC,FCV                 3380,3380A,3380B,3390,3390A,3390B,3390D,3390S
2107-FBA      002 Y S,S4   S  2  CNC,FC,FCV                 FBA
2107-IBM      002 Y S,S4   S  2  CNC,FC,FCV                 3380,3380A,3380B,3390,3390A,3390B,3390D,3390S
2501          012 N D      D  2  BL,BY,CBY,EIO              2501
2701          024 N D      D  2  BL,BY,CVC,CBY,EIO          BSC1,BSC2,BSC3,TWX,WTTA,1030,1050,1050X,115A,2701,2740,2740C,2740X,2741,
                                                            2741C,2741P,3151,3161,3162,3163,3167,3767-1,3767-2,83B3
2710          022 N D,S,S4 S  2  BL,CNC,CVC,FC,FCV,EIO      AFP1-0,2710
2821          012 N D      D  2  BL,BY,CVC,CBY,EIO          1403,2540,2540P-1,2540R-1
2835-2        269 N D      D  2  BL,CVC,EIO                 2305-2
2840-2        277 N D      D  2  BL,BY,CBY,EIO              2250-3
3088          014 N D,S,S4 S  2  BL,CVC,EIO                 CTC,CTCA,3088
3160          022 N D,S,S4 S  2  BL,BY,CNC,CVC,CBY,FCV,EIO  AFP1-0,3160
3170          022 N D,S,S4 S  2  BL,BY,CNC,CVC,CBY,FC,FCV,
                                 EIO                        AFP1-0,3170
3172          057 N D,S,S4 S4 2  BL,CNC,CVC,FCV,EIO         3172
3174          027 N D,S    D  2  BL,BY,CNC,CVC,CBY,FCV,EIO  3151,3174,3178,3179,3180,3190,3191,3192,3193,3194,3262,3262-13,3262-3,
                                                            3268,3270,3270-X,3278,3279,3286,3287,3289,3290,3471,3472,3481,3482,3483,
                                                            3791L,3812,3816,4201,4202,4207,4208,4224,4234,4245-D12,4245-D20,4250,
                                                            5210
3203          012 N D      D  2  BL,BY,CVC,CBY,EIO          3203
3258          277 N D      D  1  BL,CVC,EIO                 2250-3,3250,3251
3262          268 N D      D  2  BL,BY,CVC,CBY,EIO          3262-5
3272          027 N D      D  2  BL,BY,CVC,CBY,EIO          3151,3178,3179,3180,3190,3191,3192,3193,3194,3262,3262-13,3262-3,3268,
                                                            3270,3270-X,3272,3274,3277,3278,3279,3284,3284-1,3284-2,3286,3287,3288,
                                                            3289,3290,3791L,3812,3816,4224,4234,4245-D12,4245-D20,4250,5210
3274          027 N D      D  2  BL,BY,CVC,CBY,EIO          3151,3178,3179,3180,3190,3191,3192,3193,3194,3262,3262-13,3262-3,3268,
                                                            3270,3270-X,3274,3277,3278,3279,3284,3284-1,3284-2,3286,3287,3288,3289,
                                                            3290,3471,3472,3481,3482,3483,3791L,3812,3816,4224,4234,4245-D12,
                                                            4245-D20,4250,5210
3300          022 N D,S,S4 S  2  BL,BY,CNC,CVC,CBY,FC,FCV,
                                 EIO                        AFP1-0,3300
3380-CJ2      002 N S      S  2  BL,CVC,EIO                 3380,3380-CJ2
3422          005 N D,S    D  1  BL,CVC,EIO                 3422
3423          005 N D,S,S4 D  1  BL,CVC,EIO                 3423
3424          005 N S      S  2  BL,CVC,EIO                 3424
3430          005 N D      D  1  BL,CVC,EIO                 3430
3480          005 Y D,S,S4 S  2  BL,CNC,CVC,FCV,EIO         3480
3490          005 Y D,S,S4 S  2  BL,CNC,CVC,ISD,FC,FCV,EIO  3490
3490-C1A      005 Y D,S,S4 S  2  BL,CNC,CVC,FC,FCV,EIO      3490
3490-C10      005 Y D,S,S4 S  2  BL,CNC,CVC,ISD,FC,FCV,EIO  3490
3490-C11      005 Y D,S,S4 S  2  BL,CNC,CVC,ISD,FC,FCV,EIO  3490
```

Figure 304. Supported Hardware Report (Part 5 of 23)

```
                                        SUPPORTED HARDWARE - CONTROL UNITS  (1)       TIME: 10:24  DATE: 2019-03-04  PAGE X-   6
TYPE-MODEL    UIM U PROTCL DP IO SUPPORTED CHPID TYPES      ATTACHABLE DEVICES
------------- --- - ------ -- -- ------------------------- ------------------------------------------------------------------
3490-C2A      005 Y D,S,S4 S  2  BL,CNC,CVC,FC,FCV,EIO      3490
3490-C22      005 Y D,S,S4 S  2  BL,CNC,CVC,FC,FCV,EIO      3490
3505          012 N D      D  2  BL,BY,CVC,CBY,EIO          3505,3525
3540          032 N D      D  2  BL,BY,CVC,CBY,EIO          3540
3590          005 Y D,S,S4 S  2  BL,CNC,CVC,FC,FCV,EIO      3590
3704          023 N D      D  2  BY,CBY                     BSC1,BSC2,BSC3,TWX,WTTA,1030,1050,1050X,115A,2740,2740C,2740X,2741C,
                                                            2741P,3151,3161,3162,3163,3167,3174,3232,3271,3274,3276,3704,3767-1,
                                                            3767-2,3791L,83B3
3705          023 N D      D  2  BL,BY,CNC,CVC,CBY,FCV,EIO  BSC1,BSC2,BSC3,NCP,TWX,WTTA,1030,1050,1050X,115A,2740,2740C,2740X,2741C,
                                                            2741P,3151,3161,3162,3163,3167,3174,3232,3271,3274,3276,3705,3767-1,
                                                            3767-2,3791L,83B3
3720          023 N D      D  2  BL,BY,CVC,CBY,EIO          BSC1,BSC2,BSC3,NCP,TWX,WTTA,1030,1050,1050X,115A,2740,2740C,2740X,2741C,
                                                            2741P,3151,3161,3162,3163,3167,3174,3232,3271,3274,3276,3720,3767-1,
                                                            3767-2,3791L,83B3
3725          023 N D      D  2  BL,BY,CVC,CBY,EIO          BSC1,BSC2,BSC3,NCP,TWX,WTTA,1030,1050,1050X,115A,2740,2740C,2740X,2741C,
                                                            2741P,3161,3162,3163,3167,3174,3232,3271,3274,3276,3725,3767-1,3767-2,
                                                            3791L,83B3
3737          014 N D,S    S  2  BL,CVC,EIO                 CTC,CTCA,3737,4753
3745          023 N D,S    D  2  BL,BY,CNC,CVC,CBY,FCV,EIO  BSC1,BSC2,BSC3,NCP,TWX,WTTA,1030,1050,1050X,115A,2740,2740C,2740X,2741C,
                                                            2741P,3161,3162,3163,3167,3174,3232,3271,3274,3276,3745,3767-1,3767-2,
                                                            3791L,83B3
3746          023 N D,S    D  2  BL,BY,CNC,CVC,CBY,FCV,EIO  BSC1,BSC2,BSC3,NCP,TWX,WTTA,1030,1050,1050X,115A,2740,2740C,2740X,2741C,
                                                            2741P,3174,3232,3271,3274,3276,3745,3767-1,3767-2,3791L,83B3
3791L         027 N D,S    D  2  BL,BY,CNC,CVC,CBY,FCV,EIO  3151,3178,3179,3180,3190,3191,3192,3193,3194,3262,3262-13,3262-3,3268,
                                                            3270,3270-X,3272,3277,3278,3279,3284-1,3284-2,3286,3287,3288,3289,3290,
                                                            3791L,3812,3816,4224,4234,4245-D12,4245-D20,4250,5210
3800-1        011 N D,S    D  2  BL,BY,CVC,CBY,EIO          3800-1
3800-3        011 N D,S    D  2  BL,BY,CVC,CBY,EIO          AFP1,3800-3
3800-6        011 N D,S    D  2  BL,BY,CVC,CBY,EIO          AFP1,3800-6
3800-8        011 N D,S    D  2  BL,BY,CVC,CBY,EIO          AFP1,3800-8
3803          005 N D      D  1  BL,CVC,EIO                 3420
3811          012 N D      D  2  BL,BY,CVC,CBY,EIO          3211,3216
3820          022 N D,S4   D  2  BL,BY,CNC,CVC,CBY,FC,FCV,
                                 EIO                        AFP1,3820
3825          022 N D,S,S4 S  2  BL,BY,CNC,CVC,CBY,FC,FCV,
                                 EIO                        AFP1,AFP1-0,3825
3827          022 N D,S    S  2  BL,BY,CVC,CBY,EIO          AFP1,AFP1-0,3827
3828          022 N D,S    S  2  BL,BY,CVC,CBY,EIO          AFP1,AFP1-0,3828
3829          022 N D,S,S4 S  2  BL,BY,CNC,CVC,CBY,FCV,EIO  AFP1-0,3829
3830-2        257 N D      D  2  BL,CVC,EIO                 3330-1,3330-11,3330-2,3333-1,3333-11,3340,3344,3350
3830-3        271 N D      D  2  BL,CVC,EIO                 3330-11,3330V,3350
3831          022 N D,S    S  2  BL,BY,CVC,CBY,EIO          AFP1-0,3831
3835          022 N D,S    S  2  BL,BY,CVC,CBY,EIO          AFP1,AFP1-0,3835
3851          271 N D      D  2  BL,BY,CVC,CBY,EIO          3851
3880-1        258 N D,S    S  2  BL,CVC,EIO                 3330-1,3330-11,3330-2,3333-1,3333-11,3340,3344,3350,3370,3375
3880-11       259 N D,S    S  2  BL,CVC,EIO                 3370,3375
3880-13       002 N D,S    S  2  BL,CVC,EIO                 3380
3880-2        002 N D,S    S  2  BL,CVC,EIO                 3330-1,3330-11,3330-2,3333-1,3333-11,3340,3350,3370,3375,3380
3880-23       002 N D,S,S4 S  2  BL,CVC,EIO                 3380
3880-3        002 N D,S    S  2  BL,CVC,EIO                 3380
3880-4        258 N D,S    S  2  BL,CVC,EIO                 3375
3886          032 N D      D  2  BL,BY,CVC,CBY,EIO          3886
3890          032 N D      D  2  BL,BY,CVC,CBY,EIO          3890
3895          032 N D      D  2  BL,BY,CVC,CBY,EIO          3895
3900          022 N D,S,S4 S  2  BL,BY,CNC,CVC,CBY,FCV,EIO  AFP1,AFP1-0,3900
3935          022 N D,S,S4 S  2  BL,BY,CNC,CVC,CBY,FCV,EIO  AFP1-0,3935
3990          002 Y S,S4   S  2  BL,CNC,CVC,ISD,DSD,FCV,EIO 3380,3390
3990-1        002 N S      S  2  BL,CVC,EIO                 3380
3990-2        002 Y S,S4   S  2  BL,CNC,CVC,ISD,DSD,FCV,EIO 3380,3390
3990-3        002 Y S,S4   S  2  BL,CNC,CVC,FCV,EIO         3380,3390
3990-6        002 Y S,S4   S  2  BL,CNC,CVC,FCV,EIO         3380,3390
3995          053 Y D,S,S4 S4 2  BL,CNC,CVC,FCV,EIO         3995
3995-SDA      053 Y D,S,S4 S4 2  BL,CNC,CVC,FCV,EIO         3995
3995-151      002 Y S,S4   S  2  BL,CNC,CVC,FCV,EIO         3995-151
3995-153      002 Y S,S4   S  2  BL,CNC,CVC,FCV,EIO         3995-153
4000          022 N D,S,S4 S  2  BL,BY,CNC,CVC,CBY,FCV,EIO  AFP1-0,4000
4100          022 N D,S,S4 S  2  BL,BY,CNC,CVC,CBY,FC,FCV,
                                 EIO                        AFP1-0,4100
4245          012 N D      D  2  BL,BY,CVC,CBY,EIO          4245
4248          012 N D      D  2  BL,BY,CVC,CBY,EIO          3262,4248,6262
4370          022 N D,S,S4 S  2  BL,BY,CNC,CVC,CBY,FC,FCV,
                                 EIO                        AFP1-0,4370
5088-1        291 N D,S    D  2  BL,CVC,EIO                 HFGD,3251,3279-2B,3279-3B,5080,5081,6090,6091
5088-2        291 N D,S    D  2  BL,CVC,EIO                 HFGD,3251,3279-2B,3279-3B,5080,5081,6090,6091
6098          291 N S,S4   S  2  BL,CVC,EIO                 HFGD,3251,3279-2B,3279-3B,5080,5081,6090,6091
6120          308 N           2  IOC,EIO                   3101,3151,3174,3178,3179,3180,3190,3191,3192,3193,3194,3262,3268,3270,
                                                            3277,3278,3279,3286,3287,3289,3290,3812,3816,4224,4245,4250,5210
6135          308 N           1  IOC,EIO                   ICAELAN
6139          308 N           1  IOC,EIO                   ICAILAN
6140          308 N           1  IOC,EIO                   ICAILAN
6241          308 N           1  IOC,EIO                   ICATELE2
6242          308 N           1  IOC,EIO                   ICATELE2
6243          308 N           1  IOC,EIO                   ICATELE2
6244          308 N           1  IOC,EIO                   ICATELE2
```

Figure 305. Supported Hardware Report (Part 6 of 23)

```
                                        SUPPORTED HARDWARE - CONTROL UNITS  (1)       TIME: 10:24  DATE: 2019-03-04  PAGE X-   7
TYPE-MODEL    UIM U PROTCL DP IO SUPPORTED CHPID TYPES      ATTACHABLE DEVICES
------------- --- - ------ -- -- ------------------------- ------------------------------------------------------------------
6251          308 N           1  IOC,EIO                   ICABSCA,ICAHDLC,ICASDLC,ICATELE2
6252          308 N           1  IOC,EIO                   ICABSCA,ICAHDLC,ICASDLC,ICATELE2
6253          308 N           1  IOC,EIO                   ICABSCA,ICAHDLC,ICASDLC,ICATELE2
6254          308 N           1  IOC,EIO                   ICABSCA,ICAHDLC,ICASDLC,ICATELE2
6255          308 N           1  IOC,EIO                   ICABSCA,ICAHDLC,ICASDLC,ICATELE2
6256          308 N           1  IOC,EIO                   ICABSCA,ICAHDLC,ICASDLC,ICATELE2
6257          308 N           1  IOC,EIO                   ICABSCA,ICAHDLC,ICASDLC,ICATELE2
6258          308 N           1  IOC,EIO                   ICABSCA,ICAHDLC,ICASDLC,ICATELE2
6262          268 N D      D  2  BL,BY,CVC,CBY,EIO          6262
6310          308 N           2  IOC,EIO                   FB512,9332,9335,9336
6311          308 N           2  IOC,EIO                   9348
7171          027 N D      D  2  BL,CVC,EIO                 3161,3162,3163,3277,3278,3279,3286,3791L,7171
7770-3        023 N D      D  2  BY,CBY                     7770-3
8232          014 N D,S,S4 S  2  BL,CVC,EIO                 8232
9032          051 Y           2  CNC                       SWCH,9032
9032-3        051 Y           2  CNC                       SWCH,9032-3
9032-5        051 Y           2  CNC,FCV                   SWCH,9032-5
9033          051 Y           2  CNC                       SWCH,9033
9340          002 Y S,S4   S  2  BL,CNC,CVC,FCV,EIO         9345
9341          002 Y S,S4   S  2  BL,CNC,CVC,FCV,EIO         9345
9343          002 Y S,S4   S  2  BL,CNC,CVC,FCV,EIO         9345
9343-1        002 Y S,S4   S  2  BL,CNC,CVC,FCV,EIO         9345
```

Figure 306. Supported Hardware Report (Part 7 of 23)

```
                                    SUPPORTED HARDWARE - CONTROL UNITS  (1)       TIME: 10:24  DATE: 2019-03-04  PAGE X-   8
KEY                        KEY DESCRIPTION
---                        ---------------
TYPE-MODEL               -  SUPPORTED CONTROL UNIT TYPE
UIM                      -  INDEX OF UNIT INFORMATION MODULE SUPPORTING THIS CONTROL UNIT TYPE
U                        -  If Y, INDICATES THAT THE UNIT ADDRESS RANGE MUST START WITH 00
                            WHEN THE CONTROL UNIT IS CONNECTED TO AN ESCON CHANNEL PATH
DP                       -  DEFAULT PROTOCOL FOR PARALLEL CONTROL UNIT
IO                       -  DEFAULT I/O CONCURRENCY LEVEL FOR PARALLEL CONTROL UNIT
PROTCL                   -  PROTOCOL SUPPORTED BY THE CONTROL UNIT TYPE
SUPPORTED CHPID TYPES    -  LIST OF CHANNEL PATH TYPES WHICH ARE SUPPORTED BY THIS CONTROL UNIT TYPE
ATTACHABLE DEVICES       -  LIST OF ATTACHABLE DEVICE TYPES
```

Figure 307. Supported Hardware Report (Part 8 of 23)

```
                                    SUPPORTED HARDWARE - CONTROL UNITS  (2)       TIME: 10:24  DATE: 2019-03-04  PAGE X-   9
--CONTROL UNIT--  -ATTACHMENT COUNTS--  -UNIT ADDRESSES--  ----LOGICAL ADDRESSING---  --------LOGICAL PATH --------  DCM
TYPE-MODEL    MD  CHPMAX DEVMIN DEVMAX  MIN MAX REC RANGE  LA MIN MAX MULTHOST MAXCU  MAXPATH MINGRP SH MXESC MXFIC  ---
------------- --  ------ ------ ------  --- --- --- -----  -- --- --- -------- -----  ------- ------ -- ----- -----  ---
AFP1          -    -      -      -      -   -   -   -     N   -   -   -        -      -       -      -  -                N
CTC           -    -      -      -      -   -   -   -     N   -   -   -        -      -       -      -  -                N
DUMMY         -    -      -      -      -   -   -   -     Y   0   F   N        -      -       -      -  -                N
FCP           -    1      -      -      -   -   -   -     N   -   -   -        -      -       -      -  -                N
FCTC          -    1      -      -      -   -   -   -     Y   -   -   Y        -      -       -      -  -                N
IQD           -    1      3    256      -   -   -   1     Y   -   -   Y        -      -       -      -  -                N
NOCHECK       -    8      -      -      -   -   -   -     Y   00  FF  Y        -      -       -      -  -                Y
OSA           -    1      1    255      -   -   -   1     Y   -   -   Y        -      -       -      -  -                N
OSC           -    1      -    254      -   -   -   1     N   -   -   -        -      -       -      -  -                N
OSM           -    1      1    255      -   -   -   1     Y   -   -   Y        -      -       -      -  -                N
OSN           -    1      -    255      -   -   -   1     N   -   -   -        -      -       -      -  -                N
OSX           -    1      1    255      -   -   -   1     Y   -   -   Y        -      -       -      -  -                N
RS6K          -    1      -      -      -   -   -   -     Y   -   -   Y        -      -       -      -  -                N
RS6K-2        N    1      -      -      -   -   -   -     Y   -   -   Y        -      -       -      -  -                N
SCTC          -    1      -      -      -   -   -   -     Y   -   -   Y        -      -       -      -  -                N
SWCH          -    -      -      1      -   -   -   -     N   -   -   -        -      -       -      -  -                N
1287          -    -      -      1      -   -   -   -     N   -   -   -        -      -       -      -  -                N
1288          -    -      -      1      -   -   -   -     N   -   -   -        -      -       -      -  -                N
1750          -    -      -    256      -   -   -   -     Y   00  3F  Y        -      128     2   -         1024   Y
2032          -    -      -      1      -   -   -   -     N   -   -   -        -      -       -   -                    N
2105          -    -      -    256      -   -   -   -     Y   00  FF  Y        -      256     2   -     64   256   Y
2107          -    -      -    256      -   -   -   -     Y   00  FE  Y        -      512     2   -     64  2048   Y
2107-FBA      N    -      -    256      -   -   -   -     Y   00  FE  Y        -      512     2   -     64  2048   Y
2107-IBM      N    -      -    256      -   -   -   -     Y   00  FE  Y        -      512     2   -     64  1280   Y
2501          -    -      -      -      -   -   -   -     N   -   -   -        -      -       -   -                    N
2701          -    -      -      -      -   -   -   -     N   -   -   -        -      -       -   -                    N
2710          -    -      -      -      -   -   -   -     N   -   -   -        -      -       -   -                    N
2821          -    -      -      -      -   -   -   -     N   -   -   -        -      -       -   -                    N
2835-2        N    -      -      2      -   -  16   -     N   -   -   -        -      -       -   -                    N
2840-2        N    -      -      4      -   -   -   -     N   -   -   -        -      -       -   -                    N
3088          -    -      -      -      -   -   -   -     N   -   -   -        -      -       -   -                    N
3160          -    -      -      -      -   -   -   -     N   -   -   -        -      -       -   -                    N
3170          -    -      -      -      -   -   -   -     N   -   -   -        -      -       -   -                    N
3172          -    2      -      -      -   -   -   -     Y   -   -   Y        -      -       -   -                    N
3174          -    -      -    256      -   -  32   -     Y   0   F   Y        8      -       -   -                    N
3203          -    -      -      -      -   -   -   -     N   -   -   -        -      -       -   -                    N
3258          -    -      -     16      -   -   -   -     N   -   -   -        -      -       -   -                    N
3262          -    -      -      1      -   -   -   -     N   -   -   -        -      -       -   -                    N
3272          -    -      -     32      -   -  32   -     N   -   -   -        -      -       -   -                    N
3274          -    -      -     32      -   -   -   -     N   -   -   -        -      -       -   -                    N
3300          -    -      -      -      -   -   -   -     N   -   -   -        -      -       -   -                    N
3380-CJ2      N    -      -     64      -   -   -   -     N   -   -   -        -      -       -   -                    N
3422          -    -      -     16      -   -   -   -     N   -   -   -        -      -       -   -                    N
3423          -    -      -     16      -   -   -   -     N   -   -   -        -      -       -   -                    N
3424          -    -      -      8      -   -   8   -     N   -   -   -        -      -       -   -                    N
3430          -    -      -     16      -   -   -   -     N   -   -   -        -      -       -   -                    N
3480          -    -      -     16     16  16   -   -     N   -   -   -        -      -       -   -                    N
3490          -    -      -     16     16  16   -   -     Y   00  10  Y        -      -       -   -                    N
3490-C1A      N    -      -     16      2  16   -   -     Y   00  10  Y        -      -       -   -                    N
3490-C10      N    -      -     16      2  16   -   -     Y   00  10  Y        -      -       -   -                    N
3490-C11      N    -      -     16      2  16   -   -     Y   00  10  Y        -      -       -   -                    N
3490-C2A      N    -      -     16      2  16   -   -     Y   00  10  Y        -      -       -   -                    N
3490-C22      N    -      -     16      2  16   -   -     Y   00  10  Y        -      -       -   -                    N
3505          -    -      -      -      -   -   -   -     N   -   -   -        -      -       -   -                    N
3540          -    -      -      2      -   -   -   -     N   -   -   -        -      -       -   -                    N
3590          -    -      -     16      1  16   -   -     Y   00  FF  Y        -      -       -   -                    N
3704          -    -      -      -      -   -   -   -     N   -   -   -        -      -       -   -                    N
3705          -    -      -      -      -   -   -   -     N   -   -   -        -      -       -   -                    N
3720          -    -      -      -      -   -   -   -     N   -   -   -        -      -       -   -                    N
3725          -    -      -      -      -   -   -   -     N   -   -   -        -      -       -   -                    N
3737          -    -      -      -      -   -   -   -     N   -   -   -        -      -       -   -                    N
3745          -    -      -      -      -   -   -   -     N   -   -   -        -      -       -   -                    N
3746          -    -      -      -      -   -   -   -     N   -   -   -        -      -       -   -                    N
3791L         -    -      -    256      -   -  32   -     Y   0   F   Y        8      -       -   -                    N
3800-1        Y    -      -      -      -   -   -   -     N   -   -   -        -      -       -   -                    N
3800-3        N    -      -      -      -   -   -   -     N   -   -   -        -      -       -   -                    N
3800-6        N    -      -      -      -   -   -   -     N   -   -   -        -      -       -   -                    N
3800-8        N    -      -      -      -   -   -   -     N   -   -   -        -      -       -   -                    N
3803          -    -      -     16      -   -   -   -     N   -   -   -        -      -       -   -                    N
3811          -    -      -      1      -   -   -   -     N   -   -   -        -      -       -   -                    N
3820          -    -      -      1      -   -   -   -     N   -   -   -        -      -       -   -                    N
3825          -    -      -      -      -   -   -   -     N   -   -   -        -      -       -   -                    N
3827          -    -      -      -      -   -   -   -     N   -   -   -        -      -       -   -                    N
3828          -    -      -      -      -   -   -   -     N   -   -   -        -      -       -   -                    N
3829          -    -      -      -      -   -   -   -     N   -   -   -        -      -       -   -                    N
3830-2        N    -      -     64      -   -   -   -     N   -   -   -        -      -       -   -                    N
3830-3        N    -      -     64      -   -   -   -     N   -   -   -        -      -       -   -                    N
3831          -    -      -      -      -   -   -   -     N   -   -   -        -      -       -   -                    N
3835          -    -      -      -      -   -   -   -     N   -   -   -        -      -       -   -                    N
3851          -    -      -     64      -   -   -   -     N   -   -   -        -      -       -   -                    N
3880-1        N    -      -     64      -   -   -   -     N   -   -   -        -      -       -   -                    N
3880-11       N    -      -     64      -   -  32   -     N   -   -   -        -      -       -   -                    N
3880-13       N    -      -     64      -   -   -   -     N   -   -   -        -      -       -   -                    N
```

Figure 308. Supported Hardware Report (Part 9 of 23)

```
                                      SUPPORTED HARDWARE - CONTROL UNITS  (2)       TIME: 10:24  DATE: 2019-03-04  PAGE X-  10
--CONTROL UNIT--  -ATTACHMENT COUNTS--  -UNIT ADDRESSES--  ----LOGICAL ADDRESSING---  --------LOGICAL PATH --------  DCM
TYPE-MODEL    MD  CHPMAX DEVMIN DEVMAX  MIN MAX REC RANGE  LA MIN MAX MULTHOST MAXCU  MAXPATH MINGRP SH MXESC MXFIC
------------- --  ------ ------ ------  --- --- --- -----  -- --- --- -------- -----  ------- ------ -- ----- -----  ---
3880-2        N    -       -     64     -   -   -   -     N   -   -   -        -      -       -      -                N
3880-23       Y    -       -     64     -   -   -   -     N   -   -   -        -      -       -      -                N
3880-3        N    -       -     64     -   -   -   -     N   -   -   -        -      -       -      -                N
3880-4        N    -       -     64     -   -   -   -     N   -   -   -        -      -       -      -                N
3886          -    -       -      2     -   -   -   -     N   -   -   -        -      -       -      -                N
3890          -    -       -      2     -   -   -   -     N   -   -   -        -      -       -      -                N
3895          -    -       -      2     -   -   -   -     N   -   -   -        -      -       -      -                N
3900          -    -       -      -     -   -   -   -     N   -   -   -        -      -       -      -                N
3935          -    -       -      -     -   -   -   -     N   -   -   -        -      -       -      -                N
3990          -    -       -      -     -   -   -   -     Y   0   F   Y        -      -       -      -                Y
3990-1        N    -       -     64     -   -   -   -     N   -   -   -        -      8       8      -                N
3990-2        N    -       -    256     -   -   -   -     Y   0   F   Y        -     16       8      -                Y
3990-3        N    -       -     64     -   -   -   -     Y   0   F   Y        -     16       8      -                Y
3990-6        N    -       -    256     -   -   -   -     Y   0   F   Y        -    128       8      -                Y
3995          -    2       -      -     -   -   -   -     N   -   -   -        -      -       -      Y                N
3995-SDA      N    2       -    256     2 256  16   1     N   -   -   -        -      -       -      Y                N
3995-151      N    -       -     96     -   -   -   -     Y   0   F   Y        -      -       -      -                Y
3995-153      N    -       -     96     -   -   -   -     Y   0   F   Y        -      -       -      -                Y
4000          -    -       -      -     -   -   -   -     N   -   -   -        -      -       -      -                N
4100          -    -       -      -     -   -   -   -     N   -   -   -        -      -       -      -                N
4245          -    -       -      1     -   -   -   -     N   -   -   -        -      -       -      -                N
4248          -    -       -      1     -   -   -   -     N   -   -   -        -      -       -      -                N
4370          -    -       -      -     -   -   -   -     N   -   -   -        -      -       -      -                N
5088-1        N    -       -     16     -   -   -   -     N   -   -   -        -      -       -      -                N
5088-2        Y    -       -     32     -   -   -   -     N   -   -   -        -      -       -      -                N
6098          -    -       -    192     -   -   -   -     N   -   -   -        -      -       -      -                N
6120          -    -       -      -     -   -   -   -     N   -   -   -        -      -       -      -                N
6135          -    -       -      -     -   -   -   -     N   -   -   -        -      -       -      -                N
6139          -    -       -      -     -   -   -   -     N   -   -   -        -      -       -      -                N
6140          -    -       -      -     -   -   -   -     N   -   -   -        -      -       -      -                N
6241          -    -       -      -     -   -   -   -     N   -   -   -        -      -       -      -                N
6242          -    -       -      -     -   -   -   -     N   -   -   -        -      -       -      -                N
6243          -    -       -      -     -   -   -   -     N   -   -   -        -      -       -      -                N
6244          -    -       -      -     -   -   -   -     N   -   -   -        -      -       -      -                N
6251          -    -       -      -     -   -   -   -     N   -   -   -        -      -       -      -                N
6252          -    -       -      -     -   -   -   -     N   -   -   -        -      -       -      -                N
6253          -    -       -      -     -   -   -   -     N   -   -   -        -      -       -      -                N
6254          -    -       -      -     -   -   -   -     N   -   -   -        -      -       -      -                N
6255          -    -       -      -     -   -   -   -     N   -   -   -        -      -       -      -                N
6256          -    -       -      -     -   -   -   -     N   -   -   -        -      -       -      -                N
6257          -    -       -      -     -   -   -   -     N   -   -   -        -      -       -      -                N
6258          -    -       -      -     -   -   -   -     N   -   -   -        -      -       -      -                N
6262          -    -       -      1     -   -   -   -     N   -   -   -        -      -       -      -                N
6310          -    -       -     64     -   -   -   -     N   -   -   -        -      -       -      -                N
6311          -    -       -     64     -   -   -   -     N   -   -   -        -      -       -      -                N
7171          -    -       -     64     -   -  32   -     N   -   -   -        -      -       -      -                N
7770-3        N    -       -      -     -   -   -   -     N   -   -   -        -      -       -      -                N
8232          -    -       -      -     -   -   -   -     N   -   -   -        -      -       -      -                N
9032          -    -       -      1     -   -   -   -     N   -   -   -        -      -       -      -                N
9032-3        N    -       -      1     -   -   -   -     N   -   -   -        -      -       -      -                N
9032-5        N    -       -      1     -   -   -   -     N   -   -   -        -      -       -      -                N
9033          -    -       -      1     -   -   -   -     N   -   -   -        -      -       -      -                N
9340          -    -       -    256     -   -   -   -     N   -   -   -        -     64      64      -                Y
9341          -    -       -     16     -   -   -   -     N   -   -   -        -      2       2      -                Y
9343          -    -       -     64     -   -   -   -     N   -   -   -        -     64      64      -                Y
9343-1        N    -       -     64     -   -   -   -     N   -   -   -        -     64      64      -                Y
```

Figure 309. Supported Hardware Report (Part 10 of 23)

```
                                      SUPPORTED HARDWARE - CONTROL UNITS  (2)       TIME: 10:24  DATE: 2019-03-04  PAGE X-  11
KEY                       KEY DESCRIPTION
---                       ---------------
TYPE-MODEL              -  SUPPORTED CONTROL UNIT TYPE
MD                      -  IF Y, MODEL IS DEFAULT
ATTACHMENT CNT CHPMAX   -  MAXIMUM NUMBER OF CHANNEL PATHS THAT CAN BE CONNECTED TO C/U
               DEVMIN   -  MINIMUM NUMBER OF DEVICES THAT MUST BE CONNECTED TO C/U
               DEVMAX   -  MAXIMUM NUMBER OF DEVICES THAT CAN BE CONNECTED TO C/U
UNIT ADDRESSES    MIN   -  MINIMUM NUMBER OF UNIT ADDRESSES THAT MUST BE DEFINED TO C/U
                  MAX   -  MAXIMUM NUMBER OF UNIT ADDRESSES THAT CAN BE DEFINED TO C/U
                  REC   -  RECOMMENDED NUMBER OF UNIT ADDRESSES
                 RANGE  -  MAXIMUM NUMBER OF UNIT ADDRESS RANGES THAT CAN BE DEFINED TO C/U
LOGICAL ADDRESSING LA   -  IF Y, C/U SUPPORTS LOGICAL ADDRESSING (CUADD)
                  MIN   -  MINIMUM VALUE OF ALLOWED LOGICAL ADDRESS (CUADD)
                  MAX   -  MAXIMUM VALUE OF ALLOWED LOGICAL ADDRESS (CUADD)
             MULTHOST   -  IF Y, MULTIPLE HOSTS CAN CONNECT TO THE SAME LOGICAL ADDRESS (CUADD)
                 MAXCU  -  MAXIMUM NUMBER OF LOGICAL CONTROL UNITS SUPPORTED (CUADD)
LOGICAL PATHS MAXPATH   -  MAXIMUM NUMBER OF LOGICAL PATHS SUPPORTED BY C/U
               MINGRP   -  MINIMUM GROUP ATTACHMENT VALUE FOR LOGICAL PATHS
                   SH   -  IF Y, ONLY SINGLE HOST CAN ATTACH TO CONTROL UNIT AT A TIME
                MXESC   -  MAXIMUM NUMBER OF LOGICAL PATHS PER ESCON PORT
                MXFIC   -  MAXIMUM NUMBER OF LOGICAL PATHS PER FICON PORT
DCM                     -  DYNAMIC CHPID MANAGEMENT SUPPORT

Y                       -  CONTROL UNIT HAS THE CAPABILITY
N                       -  CONTROL UNIT DOES NOT HAVE THE CAPABILITY
-                       -  UIM DOES NOT DEFINE A VALUE OR VALUE IS NOT APPLICABLE
```

Figure 310. Supported Hardware Report (Part 11 of 23)

```
                                        SUPPORTED HARDWARE - DEVICES                 TIME: 10:24  DATE: 2019-03-04  PAGE X-  12
TYPE-MODEL    UIM MVS VM  MX GR RL RH   RD TM ST ATTACHABLE TO CU
_____________ ___ ___ __ __ __ __ ____ __ __ __ ____________________________________________________________________________
AFP1-0        022 Y   Y  N  N  1 4095  1 Y  Y  AFP1,NOCHECK,2710,3160,3170,3300,3800-3,3800-6,3800-8,3820,3825,3827,3828,3829,
                                                3831,3835,3900,3935,4000,4100,4370
BCTC          014 Y   Y  N  N  1 4095  1 N  Y  NOCHECK,SCTC
BSC1          026 Y   Y  N  N  1 4095  1 Y  Y  NOCHECK,2701,3704,3705,3720,3725,3745,3746
BSC2          026 Y   Y  N  N  1 4095  1 Y  Y  NOCHECK,2701,3704,3705,3720,3725,3745,3746
BSC3          026 Y   Y  N  N  1 4095  1 Y  Y  NOCHECK,2701,3704,3705,3720,3725,3745,3746
CTC           014 Y   Y  N  N  1 4095  1 N  Y  CTC,NOCHECK,3088,3737
CTCA          270 N   Y  N  N  1 4095  1 N  Y  CTC,NOCHECK,SCTC,3088,3737
DUMMY         050 Y   Y  N  N  1 4095  1 Y  Y  DUMMY,NOCHECK
FBA           002 Y   N  N  N  1 4095  1 Y  Y  NOCHECK,2107-FBA
FBASCSI       254 N   Y  N  N  1 4095  1 Y  Y
FB512         258 N   Y  N  N  1 4095  1 Y  Y  NOCHECK,6310
FCP           254 N   Y  N  N  1 4095  1 N  N  FCP
FCTC          014 Y   Y  N  N  1 4095  1 N  Y  FCTC,NOCHECK
HFGD          291 N   Y  N  N  1 4095  1 Y  Y  NOCHECK,5088-1,5088-2,6098
ICABSCA       308 N   Y  N  N  1 4095  1 Y  Y  NOCHECK,6251,6252,6253,6254,6255,6256,6257,6258
ICAELAN       308 N   Y  N  N  1 4095  1 Y  Y  NOCHECK,6135
ICAHDLC       308 N   Y  N  N  1 4095  1 Y  Y  NOCHECK,6251,6252,6253,6254,6255,6256,6257,6258
ICAILAN       308 N   Y  N  N  1 4095  1 Y  Y  NOCHECK,6139,6140
ICASDLC       308 N   Y  N  N  1 4095  1 Y  Y  NOCHECK,6251,6252,6253,6254,6255,6256,6257,6258
ICATELE2      308 N   Y  N  N  1 4095  1 Y  Y  NOCHECK,6241,6242,6243,6244,6251,6252,6253,6254,6255,6256,6257,6258
IQD           058 Y   Y  N  N  3 4095 10 N  N  IQD
OSA           058 Y   Y  N  N  1 4095  2 N  Y  OSA
OSA-M         058 Y   Y  N  N  1 4095  2 N  Y  OSM
OSA-X         058 Y   Y  N  N  1 4095  2 N  Y  OSX
OSAD          058 Y   Y  N  N  1 4095  1 N  Y  OSA,OSM,OSN,OSX
OSN           058 Y   Y  N  N  1 4095  1 N  N  OSN
RS6K          056 Y   Y  N  N  1 4095  1 N  Y  NOCHECK,RS6K,RS6K-2
SCTC          014 Y   Y  N  N  1 4095  1 N  Y  NOCHECK,SCTC
SWCH          051 Y   Y  N  N  1 4095  1 Y  Y  NOCHECK,SWCH,2032,9032,9032-3,9032-5,9033
TWX           025 Y   Y  N  N  1 4095  1 Y  Y  NOCHECK,2701,3704,3705,3720,3725,3745,3746
WTTA          025 Y   N  N  N  1 4095  1 Y  Y  NOCHECK,2701,3704,3705,3720,3725,3745,3746
1030          024 Y   N  N  N  1 4095  1 Y  Y  NOCHECK,2701,3704,3705,3720,3725,3745,3746
1050          024 Y   Y  N  N  1 4095  1 Y  Y  NOCHECK,2701,3704,3705,3720,3725,3745,3746
1050X         024 Y   Y  N  N  1 4095  1 Y  Y  NOCHECK,2701,3704,3705,3720,3725,3745,3746
115A          024 Y   N  N  N  1 4095  1 Y  Y  NOCHECK,2701,3704,3705,3720,3725,3745,3746
1287          032 Y   Y  N  N  1 4095  1 Y  Y  NOCHECK,1287
1288          032 Y   Y  N  N  1 4095  1 Y  Y  NOCHECK,1288
1403-N1       012 Y   Y  N  N  1 4095  1 Y  Y  NOCHECK,2821
1403-2        012 Y   Y  N  N  1 4095  1 Y  Y  NOCHECK,2821
1403-3        268 N   Y  N  N  1 4095  1 Y  Y  NOCHECK,2821
1403-5        268 N   Y  N  N  1 4095  1 Y  Y  NOCHECK,2821
1403-7        012 Y   Y  N  N  1 4095  1 Y  Y  NOCHECK,2821
2032          051 Y   Y  N  N  1 4095  1 Y  Y  NOCHECK,2032
2250-3        277 N   Y  N  N  1 4095  1 Y  Y  NOCHECK,2840-2,3258
2305-2        269 N   Y  Y  N  1    1  1 Y  Y  NOCHECK,2835-2
2501-B1       012 Y   Y  N  N  1 4095  1 Y  Y  NOCHECK,2501
2501-B2       012 Y   Y  N  N  1 4095  1 Y  Y  NOCHECK,2501
2540P-1       012 Y   Y  N  N  1 4095  1 Y  Y  NOCHECK,2821
2540R-1       012 Y   Y  N  N  1 4095  1 Y  Y  NOCHECK,2821
2701          279 N   Y  N  N  1 4095  1 Y  N  NOCHECK,2701
2710          022 Y   Y  N  N  1 4095  1 Y  Y  AFP1,NOCHECK,2710
2740          024 Y   Y  N  N  1 4095  1 Y  Y  NOCHECK,2701,3704,3705,3720,3725,3745,3746
2740C         024 Y   Y  N  N  1 4095  1 Y  Y  NOCHECK,2701,3704,3705,3720,3725,3745,3746
2740X         024 Y   Y  N  N  1 4095  1 Y  Y  NOCHECK,2701,3704,3705,3720,3725,3745,3746
2741C         025 Y   Y  N  N  1 4095  1 Y  Y  NOCHECK,2701,3704,3705,3720,3725,3745,3746
2741P         025 Y   Y  N  N  1 4095  1 Y  Y  NOCHECK,2701,3704,3705,3720,3725,3745,3746
3088          014 Y   Y  N  N  1 4095 32 N  Y  NOCHECK,3088
3151          281 N   Y  N  N  1 4095  1 Y  Y  NOCHECK,2701,3174,3272,3274,3704,3705,3720,3791L,6120
3160          022 Y   Y  N  N  1 4095  1 Y  Y  AFP1,NOCHECK,3160
3161          281 N   Y  N  N  1 4095  1 Y  Y  NOCHECK,2701,3704,3705,3720,3725,3745,7171
3162          281 N   Y  N  N  1 4095  1 Y  Y  NOCHECK,2701,3704,3705,3720,3725,3745,7171
3163          281 N   Y  N  N  1 4095  1 Y  Y  NOCHECK,2701,3704,3705,3720,3725,3745,7171
3167          281 N   Y  N  N  1 4095  1 Y  Y  NOCHECK,2701,3704,3705,3720,3725,3745
3170          022 Y   Y  N  N  1 4095  1 Y  Y  AFP1,NOCHECK,3170
3172          057 Y   Y  N  N  1 4095  1 N  Y  NOCHECK,3172
3174          027 Y   Y  N  N  1 4095  1 Y  N  NOCHECK,3174,3704,3705,3720,3725,3745,3746,6120
3178          004 Y   Y  N  N  1 4095  1 Y  Y  NOCHECK,3174,3272,3274,3791L,6120
3179          004 Y   Y  N  N  1 4095  1 Y  Y  NOCHECK,3174,3272,3274,3791L,6120
3180          260 N   Y  N  N  1 4095  1 Y  Y  NOCHECK,3174,3272,3274,3791L,6120
3180-1        004 Y   Y  N  N  1 4095  1 Y  Y  NOCHECK,3174,3272,3274,3791L,6120
3190          260 N   Y  N  N  1 4095  1 Y  Y  NOCHECK,3174,3272,3274,3791L,6120
3191          004 Y   Y  N  N  1 4095  1 Y  Y  NOCHECK,3174,3272,3274,3791L,6120
3192          004 Y   Y  N  N  1 4095  1 Y  Y  NOCHECK,3174,3272,3274,3791L,6120
3192-F        004 Y   Y  N  N  1 4095  1 Y  Y  NOCHECK,3174,3272,3274,3791L,6120
3193          004 Y   Y  N  N  1 4095  1 Y  Y  NOCHECK,3174,3272,3274,3791L,6120
3194          004 Y   Y  N  N  1 4095  1 Y  Y  NOCHECK,3174,3272,3274,3791L,6120
3203-4        012 Y   N  N  N  1 4095  1 Y  Y  NOCHECK,3203
3203-5        012 Y   Y  N  N  1 4095  1 Y  Y  NOCHECK,3203
3211          012 Y   Y  N  N  1 4095  1 Y  Y  NOCHECK,3811
3215          260 N   Y  N  N  1 4095  1 Y  Y  NOCHECK,OSC
3216          278 N   Y  N  N  1 4095  1 Y  Y  NOCHECK,3811
3250          277 N   Y  N  N  1 4095  1 Y  Y  NOCHECK,3258
3251          277 N   Y  N  N  1 4095  1 Y  Y  NOCHECK,3258,5088-1,5088-2,6098
```

Figure 311. Supported Hardware Report (Part 12 of 23)

```
                                        SUPPORTED HARDWARE - DEVICES                  TIME: 10:24  DATE: 2019-03-04  PAGE X-  13
TYPE-MODEL    UIM MVS VM  MX GR RL RH   RD TM ST ATTACHABLE TO CU
_____________ ___ ___ __  __ __ __ __ ____ __ __ ____________________________________________________________________________________
3262-13       031  Y   Y  N  N   1 4095  1 Y  Y  NOCHECK,3174,3272,3274,3791L,4248,6120
3262-3        031  Y   Y  N  N   1 4095  1 Y  Y  NOCHECK,3174,3272,3274,3791L,4248,6120
3262-5        268  N   Y  N  N   1 4095  1 Y  Y  NOCHECK,3174,3262,3272,3274,3791L,4248,6120
3268-2        031  Y   Y  N  N   1 4095  1 Y  Y  NOCHECK,3174,3272,3274,3791L,6120
3270          260  N   Y  N  N   1 4095  1 Y  Y  NOCHECK,3174,3272,3274,3791L,6120
3270-X        004  Y   Y  N  N   1 4095  1 Y  Y  NOCHECK,OSC,3174,3272,3274,3791L,6120
3272          027  Y   N  N  N   1 4095  1 Y  N  NOCHECK,3272,3791L
3274          027  Y   Y  N  N   1 4095  1 Y  N  NOCHECK,3272,3274,3704,3705,3720,3725,3745,3746
3277-1        004  Y   Y  N  N   1 4095  1 Y  Y  NOCHECK,3272,3274,3791L,6120,7171
3277-2        004  Y   Y  N  N   1 4095  1 Y  Y  NOCHECK,3272,3274,3791L,6120,7171
3278-1        004  Y   Y  N  N   1 4095  1 Y  Y  NOCHECK,3174,3272,3274,3791L,6120,7171
3278-2        004  Y   Y  N  N   1 4095  1 Y  Y  NOCHECK,3174,3272,3274,3791L,6120,7171
3278-2A       004  Y   Y  N  N   1 4095  1 Y  Y  NOCHECK,3174,3272,3274,3791L,6120,7171
3278-3        004  Y   Y  N  N   1 4095  1 Y  Y  NOCHECK,3174,3272,3274,3791L,6120,7171
3278-4        004  Y   Y  N  N   1 4095  1 Y  Y  NOCHECK,3174,3272,3274,3791L,6120,7171
3278-5        004  Y   Y  N  N   1 4095  1 Y  Y  NOCHECK,3174,3272,3274,3791L,6120,7171
3279-S2B      004  Y   Y  N  N   1 4095  1 Y  Y  NOCHECK,3174,3272,3274,3791L,6120,7171
3279-S3G      004  Y   Y  N  N   1 4095  1 Y  Y  NOCHECK,3174,3272,3274,3791L,6120,7171
3279-2        260  N   Y  N  N   1 4095  1 Y  Y  NOCHECK,3174,3272,3274,3791L,6120,7171
3279-2A       004  Y   Y  N  N   1 4095  1 Y  Y  NOCHECK,3174,3272,3274,3791L,6120,7171
3279-2B       004  Y   Y  N  N   1 4095  1 Y  Y  NOCHECK,3174,3272,3274,3791L,5088-1,5088-2,6098,6120,7171
3279-2C       004  Y   Y  N  N   1 4095  1 Y  Y  NOCHECK,3174,3272,3274,3791L,6120,7171
3279-2X       004  Y   Y  N  N   1 4095  1 Y  Y  NOCHECK,3174,3272,3274,3791L,6120,7171
3279-3        260  N   Y  N  N   1 4095  1 Y  Y  NOCHECK,3174,3272,3274,3791L,6120,7171
3279-3A       004  Y   Y  N  N   1 4095  1 Y  Y  NOCHECK,3174,3272,3274,3791L,6120,7171
3279-3B       004  Y   Y  N  N   1 4095  1 Y  Y  NOCHECK,3174,3272,3274,3791L,5088-1,5088-2,6098,6120,7171
3279-3X       004  Y   Y  N  N   1 4095  1 Y  Y  NOCHECK,3174,3272,3274,3791L,6120,7171
3284-1        031  Y   Y  N  N   1 4095  1 Y  Y  NOCHECK,3272,3274,3791L
3284-2        031  Y   Y  N  N   1 4095  1 Y  Y  NOCHECK,3272,3274,3791L
3286-1        031  Y   Y  N  N   1 4095  1 Y  Y  NOCHECK,OSC,3174,3272,3274,3791L,6120,7171
3286-2        031  Y   Y  N  N   1 4095  1 Y  Y  NOCHECK,OSC,3174,3272,3274,3791L,6120,7171
3287-1        031  Y   Y  N  N   1 4095  1 Y  Y  NOCHECK,OSC,3174,3272,3274,3791L,6120
3287-1C       031  Y   Y  N  N   1 4095  1 Y  Y  NOCHECK,OSC,3174,3272,3274,3791L,6120
3287-2        031  Y   Y  N  N   1 4095  1 Y  Y  NOCHECK,OSC,3174,3272,3274,3791L,6120
3287-2C       031  Y   Y  N  N   1 4095  1 Y  Y  NOCHECK,OSC,3174,3272,3274,3791L,6120
3288          031  Y   Y  N  N   1 4095  1 Y  Y  NOCHECK,3272,3274,3791L
3289-1        031  Y   Y  N  N   1 4095  1 Y  Y  NOCHECK,3174,3272,3274,3791L,6120
3289-2        031  Y   Y  N  N   1 4095  1 Y  Y  NOCHECK,3174,3272,3274,3791L,6120
3290          004  Y   Y  N  N   1 4095  1 Y  Y  NOCHECK,3174,3272,3274,3791L,6120
3300          022  Y   Y  N  N   1 4095  1 Y  Y  AFP1,NOCHECK,3300
3330-1        257  N   Y  N  N   1 4095  2 Y  Y  NOCHECK,3830-2,3880-1,3880-2
3330-11       257  N   Y  N  N   1 4095  2 Y  Y  NOCHECK,3830-2,3830-3,3880-1,3880-2
3330-2        257  N   Y  N  N   1 4095  2 Y  Y  NOCHECK,3830-2,3880-1,3880-2
3330V         271  N   Y  N  N   1 4095  1 Y  Y  NOCHECK,3830-3
3333-1        257  N   Y  N  N   1 4095  2 Y  Y  NOCHECK,3830-2,3880-1,3880-2
3333-11       257  N   Y  N  N   1 4095  2 Y  Y  NOCHECK,3830-2,3880-1,3880-2
3340          257  N   Y  N  N   1 4095  2 Y  Y  NOCHECK,3830-2,3880-1,3880-2
3344          257  N   Y  N  N   1 4095  2 Y  Y  NOCHECK,3830-2,3880-1
3350          257  N   Y  N  N   1 4095  2 Y  Y  NOCHECK,3830-2,3830-3,3880-1,3880-2
3370          258  N   Y  N  N   1 4095  1 Y  Y  NOCHECK,3880-1,3880-11,3880-2
3375          258  N   Y  N  N   1 4095  1 Y  Y  NOCHECK,3880-1,3880-11,3880-2,3880-4
3380          002  Y   Y  N  N   1 4095  1 Y  Y  NOCHECK,1750,2105,2107,2107-IBM,3380-CJ2,3880-13,3880-2,3880-23,3880-3,3990,3990-1,
                                                 3990-2,3990-3,3990-6
3380-CJ2      002  Y   Y  N  N   1 4095  1 Y  Y  NOCHECK,1750,2105,2107,2107-IBM,3380-CJ2,3880-13,3880-2,3880-23,3880-3,3990,3990-1,
                                                 3990-2,3990-3,3990-6
3380A         002  Y   Y  Y  N   1 4095  1 Y  Y  NOCHECK,1750,2105,2107,2107-IBM
3380B         002  Y   Y  Y  N   1 4095  1 Y  Y  NOCHECK,1750,2105,2107,2107-IBM
3390          002  Y   Y  N  N   1 4095  1 Y  Y  NOCHECK,1750,2105,2107,2107-IBM,3990,3990-2,3990-3,3990-6
3390A         002  Y   Y  Y  N   1 4095  1 Y  Y  NOCHECK,1750,2105,2107,2107-IBM
3390B         002  Y   Y  Y  N   1 4095  1 Y  Y  NOCHECK,1750,2105,2107,2107-IBM
3390D         002  Y   N  Y  N   1 4095  1 Y  Y  NOCHECK,1750,2105,2107,2107-IBM
3390S         002  Y   N  Y  N   1 4095  1 Y  Y  NOCHECK,1750,2105,2107,2107-IBM
3420-3        005  Y   Y  N  N   1 4095  1 Y  Y  NOCHECK,3803
3420-4        005  Y   Y  N  N   1 4095  1 Y  Y  NOCHECK,3803
3420-5        005  Y   Y  N  N   1 4095  1 Y  Y  NOCHECK,3803
3420-6        005  Y   Y  N  N   1 4095  1 Y  Y  NOCHECK,3803
3420-7        005  Y   Y  N  N   1 4095  1 Y  Y  NOCHECK,3803
3420-8        005  Y   Y  N  N   1 4095  1 Y  Y  NOCHECK,3803
3422          005  Y   Y  N  N   1 4095  1 Y  Y  NOCHECK,3422
3423          005  Y   N  N  N   1 4095  1 Y  Y  NOCHECK,3423
3424          005  Y   Y  N  N   1 4095  1 Y  Y  NOCHECK,3424
3430          005  Y   Y  N  N   1 4095  1 Y  Y  NOCHECK,3430
3471          004  Y   N  N  N   1 4095  1 Y  Y  NOCHECK,3174,3274
3472          004  Y   N  N  N   1 4095  1 Y  Y  NOCHECK,3174,3274
3480          005  Y   Y  N  N   1 4095  1 Y  Y  NOCHECK,3480
3481          004  Y   N  N  N   1 4095  1 Y  Y  NOCHECK,3174,3274
3482          004  Y   N  N  N   1 4095  1 Y  Y  NOCHECK,3174,3274
3483          004  Y   N  N  N   1 4095  1 Y  Y  NOCHECK,3174,3274
3490          005  Y   Y  N  N   1 4095  1 Y  Y  NOCHECK,3490,3490-C1A,3490-C10,3490-C11,3490-C2A,3490-C22
3505          012  Y   Y  N  N   1 4095  1 Y  Y  NOCHECK,3505
3525          012  Y   Y  N  N   1 4095  1 Y  Y  NOCHECK,3505
3540          032  Y   Y  N  N   1 4095  1 Y  Y  NOCHECK,3540
3590          005  Y   Y  N  N   1 4095  1 Y  Y  NOCHECK,3590
3704          023  Y   Y  N  N   1 4095  1 Y  N  NOCHECK,3704
```

Figure 312. Supported Hardware Report (Part 13 of 23)

```
                                        SUPPORTED HARDWARE - DEVICES                  TIME: 10:24  DATE: 2019-03-04  PAGE X-  14
TYPE-MODEL    UIM MVS VM  MX GR RL RH   RD TM ST ATTACHABLE TO CU
_____________ ___ __ __  __ __ __ __ ____ __ __ __ ____________________________________________________________________________________
3705          023  Y  Y  N  N  1 4095  1 Y  N  NOCHECK,3705
3720          023  Y  Y  N  N  1 4095  1 Y  N  NOCHECK,3720
3725          023  Y  Y  N  N  1 4095  1 Y  N  NOCHECK,3725
3737          014  Y  Y  N  N  1 4095  1 N  Y  NOCHECK,3737
3745          023  Y  Y  N  N  1 4095  1 Y  N  NOCHECK,OSN,3745,3746
3746          023  Y  Y  N  N  1 4095  1 Y  N  NOCHECK
3767-1        024  Y  N  N  N  1 4095  1 Y  Y  NOCHECK,2701,3704,3705,3720,3725,3745,3746
3767-2        024  Y  N  N  N  1 4095  1 Y  Y  NOCHECK,2701,3704,3705,3720,3725,3745,3746
3791L         027  Y  N  N  N  1 4095  1 Y  N  NOCHECK,3174,3272,3274,3704,3705,3720,3725,3745,3746,3791L,7171
3800-1        011  Y  Y  N  N  1 4095  1 Y  Y  NOCHECK,3800-1
3800-3        011  Y  Y  N  N  1 4095  1 Y  Y  NOCHECK,3800-3
3800-6        011  Y  Y  N  N  1 4095  1 Y  Y  NOCHECK,3800-6
3800-8        011  Y  Y  N  N  1 4095  1 Y  Y  NOCHECK,3800-8
3812          031  Y  Y  N  N  1 4095  1 Y  Y  NOCHECK,3174,3272,3274,3791L,6120
3816          287  N  Y  N  N  1 4095  1 Y  Y  NOCHECK,3174,3272,3274,3791L,6120
3820          022  Y  Y  N  N  1 4095  1 Y  N  NOCHECK,3820
3825          022  Y  Y  N  N  1 4095  1 Y  Y  AFP1,NOCHECK,3825
3827          022  Y  Y  N  N  1 4095  1 Y  Y  AFP1,NOCHECK,3827
3828          022  Y  Y  N  N  1 4095  1 Y  Y  AFP1,NOCHECK,3828
3829          022  Y  Y  N  N  1 4095  1 Y  Y  AFP1,NOCHECK,3829
3831          022  Y  Y  N  N  1 4095  1 Y  Y  AFP1,NOCHECK,3831
3835          022  Y  Y  N  N  1 4095  1 Y  Y  AFP1,NOCHECK,3835
3851          271  N  Y  N  N  1 4095  1 Y  Y  NOCHECK,3851
3886          032  Y  Y  N  N  1 4095  1 Y  Y  NOCHECK,3886
3890          032  Y  Y  N  N  1 4095  1 Y  Y  NOCHECK,3890
3895          032  Y  Y  N  N  1 4095  1 Y  Y  NOCHECK,3895
3900          022  Y  Y  N  N  1 4095  1 Y  Y  AFP1,NOCHECK,3900
3935          022  Y  Y  N  N  1 4095  1 Y  Y  AFP1,NOCHECK,3935
3995          053  Y  Y  N  Y  1    1  1 N  Y  NOCHECK,3995,3995-SDA
3995-SDA      053  Y  Y  N  N  1  256 16 N  Y  NOCHECK,3995-SDA
3995-151      002  Y  Y  N  N  1 4095  1 Y  Y  NOCHECK,3995-SDA,3995-151
3995-153      002  Y  Y  N  N  1 4095  1 Y  Y  NOCHECK,3995-SDA,3995-153
4000          022  Y  Y  N  N  1 4095  1 Y  Y  AFP1,NOCHECK,4000
4100          022  Y  N  N  N  1 4095  1 Y  Y  AFP1,NOCHECK,4100
4224          031  Y  Y  N  N  1 4095  1 Y  Y  NOCHECK,3174,3272,3274,3791L,6120
4245          012  Y  Y  N  N  1 4095  1 Y  Y  NOCHECK,4245,6120
4248          012  Y  Y  N  N  1 4095  1 Y  Y  NOCHECK,4248
4250          031  Y  N  N  N  1 4095  1 Y  Y  NOCHECK,3174,3272,3274,3791L,6120
4370          022  Y  Y  N  N  1 4095  1 Y  Y  AFP1,NOCHECK,4370
5080          291  N  Y  N  N  1 4095  1 Y  Y  NOCHECK,5088-1,5088-2,6098
5081          291  N  Y  N  N  1 4095  1 Y  Y  NOCHECK,5088-1,5088-2,6098
5210          031  Y  Y  N  N  1 4095  1 Y  Y  NOCHECK,3174,3272,3274,3791L,6120
6090          291  N  Y  N  N  1 4095  1 Y  Y  NOCHECK,5088-1,5088-2,6098
6091          291  N  Y  N  N  1 4095  1 Y  Y  NOCHECK,5088-1,5088-2,6098
6262          268  N  Y  N  N  1 4095  1 Y  Y  NOCHECK,4248,6262
7171          027  Y  Y  N  N  1 4095  1 Y  N  NOCHECK,7171
7770-3        023  Y  N  N  N  1 4095  1 Y  N  NOCHECK,7770-3
8232          014  Y  Y  N  N  1 4095 32 N  Y  NOCHECK,8232
83B3          025  Y  N  N  N  1 4095  1 Y  Y  NOCHECK,2701,3704,3705,3720,3725,3745,3746
9032          051  Y  Y  N  N  1 4095  1 Y  Y  NOCHECK,9032
9032-3        051  Y  Y  N  N  1 4095  1 Y  Y  NOCHECK,9032,9032-3
9032-5        051  Y  Y  N  N  1 4095  1 Y  Y  NOCHECK,9032,9032-5
9033          051  Y  Y  N  N  1 4095  1 Y  Y  NOCHECK,9033
9332-40       258  N  Y  N  N  1 4095  1 Y  Y  NOCHECK,6310
9332-42       258  N  Y  N  N  1 4095  1 Y  Y  NOCHECK,6310
9332-60       258  N  Y  N  N  1 4095  1 Y  Y  NOCHECK,6310
9332-62       258  N  Y  N  N  1 4095  1 Y  Y  NOCHECK,6310
9335-B1       258  N  Y  N  N  1 4095  1 Y  Y  NOCHECK,6310
9336-10       258  N  Y  N  N  1 4095  1 Y  Y  NOCHECK,6310
9336-20       258  N  Y  N  N  1 4095  1 Y  Y  NOCHECK,6310
9345          002  Y  Y  N  N  1 4095  1 Y  Y  NOCHECK,9340,9341,9343,9343-1
9348-1        261  N  Y  N  N  1 4095  1 Y  Y  NOCHECK,6311
```

Figure 313. Supported Hardware Report (Part 14 of 23)

```
                                        SUPPORTED HARDWARE - DEVICES                  TIME: 10:24  DATE: 2019-03-04  PAGE X-  15
        KEY                   KEY DESCRIPTION
        ---                   ---------------
        TYPE-MODEL         -  SUPPORTED DEVICE TYPE
        UIM                -  INDEX OF UNIT INFORMATION MODULE SUPPORTING THIS DEVICE TYPE
        MVS                -  DEVICE IS SUPPORTED FOR MVS DEFINITION
        VM                 -  DEVICE TYPE IS SUPPORTED FOR VM DEFINITION
        MX                 -  DEVICE IS A MULTI-EXPOSURE DEVICE OR A PARALLEL  ACCESS VOLUME DEVICE
        GR                 -  DEVICE IS A GROUP DEVICE
        RL                 -  MINIMUM NUMBER OF DEVICES TO BE DEFINED
        RH                 -  MAXIMUM NUMBER OF DEVICES TO BE DEFINED
        RD                 -  DEFAULT NUMBER OF DEVICES TO BE DEFINED
        TM                 -  DEFAULT TIMEOUT VALUE
        ST                 -  DEFAULT STADET VALUE
        ATTACHABLE TO CU   -  LIST OF CONTROL UNIT TYPES TO WHICH DEVICE TYPE IS ATTACHABLE
        Y                  -  DEVICE TYPE HAS THE CAPABILITY
        N                  -  CAPABILITY IS NOT AVAILABLE
```

Figure 314. Supported Hardware Report (Part 15 of 23)

```
                                        SUPPORTED HARDWARE - MVS DEVICES              TIME: 10:24  DATE: 2019-03-04  PAGE X-  16
TYPE-MODEL    UIM GENERIC  DPREF DYN 4DIG UCB NIP SUPPORTED PARAMETERS (VALUES) / FEATURES
_____________ ___ ________ ______ ___ ____ ___ ___ ____________________________________________________________________________
AFP1-0        022 AFP1      1750  Y   Y    N   N  FEATURE,OFFLINE,DYNAMIC / BURSTER
BCTC          014 BCTC      8350  Y   Y    Y   N  OFFLINE,DYNAMIC,LOCANY
BSC1          026 AAA9      6900  N   N    N   N  (R)ADAPTER(BSCA),FEATURE,OFFLINE,(R)TCU(2701,2702,2703) / DUALCODE,DUALCOMM
BSC2          026 AAAA      7000  N   N    N   N  (R)ADAPTER(BSCA),FEATURE,OFFLINE,(R)TCU(2701,2702,2703) / AUTOANSR,AUTOCALL,
                                                   DUALCODE,DUALCOMM
BSC3          026 AAAB      7100  N   N    N   N  (R)ADAPTER(BSCA),FEATURE,OFFLINE,(R)TCU(2701,2702,2703) / AUTOPOLL,DUALCODE,
                                                   DUALCOMM
CTC           014 CTC       8400  Y   Y    Y   N  FEATURE,OFFLINE,DYNAMIC,LOCANY / 370
DUMMY         050 DUMMY    99991  Y   Y    Y   N  OFFLINE,DYNAMIC,LOCANY
FBA           002 FBA        260  Y   Y    Y   N  FEATURE,OFFLINE,DYNAMIC,LOCANY /
FCTC          014 FCTC      8301  Y   Y    Y   N  OFFLINE,DYNAMIC,LOCANY
IQD           058 IQD       8362  Y   Y    Y   N  OFFLINE,DYNAMIC,LOCANY
OSA           058 OSA       8360  Y   Y    Y   N  OFFLINE,DYNAMIC,LOCANY
OSA-M         058 OSAM      8365  Y   Y    Y   N  OFFLINE,DYNAMIC,LOCANY
OSA-X         058 OSAX      8364  Y   Y    Y   N  OFFLINE,DYNAMIC,LOCANY
OSAD          058 OSAD      8361  Y   Y    Y   N  OFFLINE,DYNAMIC,LOCANY
OSN           058 OSN       8363  Y   Y    Y   N  OFFLINE,DYNAMIC,LOCANY
RS6K          056 RS6K      8389  Y   Y    Y   N  OFFLINE,DYNAMIC,LOCANY
SCTC          014 SCTC      8300  Y   Y    Y   N  OFFLINE,DYNAMIC,LOCANY
SWCH          051 SWCH     10500  Y   Y    Y   N  OFFLINE,DYNAMIC,LOCANY
TWX           025 AAA7      6700  N   N    N   N  (R)ADAPTER(TELE2),FEATURE,OFFLINE,SETADDR(0,1,2,3),(R)TCU(2701,2702,
                                                   2703) / AUTOANSR,AUTOCALL
WTTA          025 AAAD      7300  N   N    N   N  (R)ADAPTER(TELEW),OFFLINE,SETADDR(0,1,2,3),(R)TCU(2701,2702,2703)
1030          024 AAA1      6100  N   N    N   N  (R)ADAPTER(IBM2),FEATURE,OFFLINE,SETADDR(0,1,2,3),(R)TCU(2701,2702,
                                                   2703) / AUTOPOLL
1050          024 AAA2      6200  N   N    N   N  (R)ADAPTER(IBM1,IBMT),FEATURE,OFFLINE,SETADDR(0,1,2,3),(R)TCU(2701,2702,
                                                   2703) / AUTOPOLL,AUTOANSR,AUTOCALL
1050X         024 AAAG      9700  N   N    N   N  (R)ADAPTER(IBM1,IBMT),FEATURE,OFFLINE,SETADDR(0,1,2,3),(R)TCU(2701,2702,
                                                   2703) / AUTOANSR,AUTOCALL
115A          024 AAA5      6500  N   N    N   N  (R)ADAPTER(TELE1),OFFLINE,SETADDR(0,1,2,3),(R)TCU(2701,2702,2703)
1287          032 1287      5000  N   N    N   N  OFFLINE
1288          032 1288      5100  N   N    N   N  OFFLINE
1403-N1       012 1403      2100  Y   Y    N   N  FEATURE,OFFLINE,DYNAMIC / UNVCHSET
1403-2        012 1403      2100  Y   Y    N   N  FEATURE,OFFLINE,DYNAMIC / UNVCHSET
1403-7        012 1403      2100  Y   Y    N   N  OFFLINE,DYNAMIC
2032          051 SWCH     10500  Y   Y    Y   N  OFFLINE,DYNAMIC,LOCANY
2501-B1       012 2501      2300  Y   Y    N   N  FEATURE,OFFLINE,DYNAMIC / CARDIMAGE
2501-B2       012 2501      2300  Y   Y    N   N  FEATURE,OFFLINE,DYNAMIC / CARDIMAGE
2540P-1       012 2540-2    2900  Y   Y    N   N  FEATURE,OFFLINE,DYNAMIC / CARDIMAGE
2540R-1       012 2540      2800  Y   Y    N   N  FEATURE,OFFLINE,DYNAMIC / CARDIMAGE
2710          022 AFP1      1750  Y   Y    N   N  FEATURE,OFFLINE,DYNAMIC / BURSTER
2740          024 AAA8      6800  N   N    N   N  (R)ADAPTER(IBM1),FEATURE,OFFLINE,SETADDR(0,1,2,3),(R)TCU(2701,2702,
                                                   2703) / AUTOPOLL,AUTOANSR,AUTOCALL,CHECKING,INTERRUPT,OIU,SCONTROL,XCONTROL
2740C         024 AAAI      9900  N   N    N   N  (R)ADAPTER(IBM1),(R)FEATURE,OFFLINE,SETADDR(0,1,2,3),(R)TCU(2701,2702,
                                                   2703) / AUTOANSR,AUTOCALL,CHECKING
2740X         024 AAAH      9800  N   N    N   N  (R)ADAPTER(IBM1),(R)FEATURE,OFFLINE,SETADDR(0,1,2,3),(R)TCU(2701,2702,
                                                   2703) / AUTOANSR,AUTOCALL,CHECKING
2741C         025 AAAF      7500  N   N    N   N  (R)ADAPTER(IBM1),FEATURE,OFFLINE,SETADDR(0,1,2,3),(R)TCU(2701,2702,
                                                   2703) / AUTOANSR
2741P         025 AAAE      7400  N   N    N   N  (R)ADAPTER(IBM1),FEATURE,OFFLINE,SETADDR(0,1,2,3),(R)TCU(2701,2702,
                                                   2703) / AUTOANSR
3088          014 CTC       8400  Y   Y    Y   N  FEATURE,OFFLINE,DYNAMIC,LOCANY / 370
3160          022 AFP1      1750  Y   Y    N   N  FEATURE,OFFLINE,DYNAMIC / BURSTER
3170          022 AFP1      1750  Y   Y    N   N  FEATURE,OFFLINE,DYNAMIC / BURSTER
3172          057 3172      8398  Y   Y    Y   N  OFFLINE,DYNAMIC,LOCANY
3174          027 3174      7650  Y   Y    N   N  OFFLINE,DYNAMIC,OWNER(VTAM,OTHER)
3178          004 3277-2    3800  Y   Y    Y   Y  FEATURE,OFFLINE,DYNAMIC,LOCANY / ASCACHAR,ASCBCHAR,DOCHAR,FRCHAR,GRCHAR,KACHAR,
                                                   UKCHAR,AUDALRM,MAGCDRD,NUMLOCK,PTREAD,SELPEN,ASKY3277,DEKY3277,EBKY3277,OCKY3277,
                                                   KB70KEY,KB78KEY,KB81KEY
3179          004 3277-2    3800  Y   Y    Y   Y  FEATURE,OFFLINE,DYNAMIC,LOCANY / ASCACHAR,ASCBCHAR,DOCHAR,FRCHAR,GRCHAR,KACHAR,
                                                   UKCHAR,AUDALRM,MAGCDRD,NUMLOCK,PTREAD,SELPEN,ASKY3277,DEKY3277,EBKY3277,OCKY3277,
                                                   KB70KEY,KB78KEY,KB81KEY
3180-1        004 3277-2    3800  Y   Y    Y   Y  FEATURE,OFFLINE,DYNAMIC,LOCANY / ASCACHAR,ASCBCHAR,DOCHAR,FRCHAR,GRCHAR,KACHAR,
                                                   UKCHAR,AUDALRM,MAGCDRD,NUMLOCK,PTREAD,SELPEN,ASKY3277,DEKY3277,EBKY3277,OCKY3277,
                                                   KB70KEY,KB78KEY,KB81KEY
3191          004 3277-2    3800  Y   Y    Y   Y  FEATURE,OFFLINE,DYNAMIC,LOCANY / ASCACHAR,ASCBCHAR,DOCHAR,FRCHAR,GRCHAR,KACHAR,
                                                   UKCHAR,AUDALRM,MAGCDRD,NUMLOCK,PTREAD,SELPEN,ASKY3277,DEKY3277,EBKY3277,OCKY3277,
                                                   KB70KEY,KB78KEY,KB81KEY
3192          004 3277-2    3800  Y   Y    Y   Y  FEATURE,OFFLINE,DYNAMIC,LOCANY / ASCACHAR,ASCBCHAR,DOCHAR,FRCHAR,GRCHAR,KACHAR,
                                                   UKCHAR,AUDALRM,MAGCDRD,NUMLOCK,PTREAD,SELPEN,ASKY3277,DEKY3277,EBKY3277,OCKY3277,
                                                   KB70KEY,KB78KEY,KB81KEY
3192-F        004 3277-2    3800  Y   Y    Y   Y  FEATURE,OFFLINE,DYNAMIC,LOCANY / ASCACHAR,ASCBCHAR,DOCHAR,FRCHAR,GRCHAR,KACHAR,
                                                   UKCHAR,AUDALRM,MAGCDRD,NUMLOCK,PTREAD,SELPEN,ASKY3277,DEKY3277,EBKY3277,OCKY3277,
                                                   KB70KEY,KB78KEY,KB81KEY
3193          004 3277-2    3800  Y   Y    Y   Y  FEATURE,OFFLINE,DYNAMIC,LOCANY / ASCACHAR,ASCBCHAR,DOCHAR,FRCHAR,GRCHAR,KACHAR,
                                                   UKCHAR,AUDALRM,MAGCDRD,NUMLOCK,PTREAD,SELPEN,ASKY3277,DEKY3277,EBKY3277,OCKY3277,
                                                   KB70KEY,KB78KEY,KB81KEY
3194          004 3277-2    3800  Y   Y    Y   Y  FEATURE,OFFLINE,DYNAMIC,LOCANY / ASCACHAR,ASCBCHAR,DOCHAR,FRCHAR,GRCHAR,KACHAR,
                                                   UKCHAR,AUDALRM,MAGCDRD,NUMLOCK,PTREAD,SELPEN,ASKY3277,DEKY3277,EBKY3277,OCKY3277,
                                                   KB70KEY,KB78KEY,KB81KEY
3203-4        012 3203      2000  Y   Y    N   N  OFFLINE,DYNAMIC
3203-5        012 3203      2000  Y   Y    N   N  OFFLINE,DYNAMIC
3211          012 3211      1900  Y   Y    N   N  OFFLINE,DYNAMIC
3262-13       031 3286-2    4400  N   N    N   N  FEATURE,OFFLINE / DOCHAR,FRCHAR,GRCHAR,KACHAR,UKCHAR,PTREAD
```

Figure 315. Supported Hardware Report (Part 16 of 23)

```
                                        SUPPORTED HARDWARE - MVS DEVICES              TIME: 10:24  DATE: 2019-03-04  PAGE X-  17
TYPE-MODEL    UIM GENERIC  DPREF DYN 4DIG UCB NIP SUPPORTED PARAMETERS (VALUES) / FEATURES
_____________ ___ ________ ______ ___ ___ ___ ___ ____________________________________________________________________________________
3262-3        031 3286-2    4400  N   N    N   N  FEATURE,OFFLINE / DOCHAR,FRCHAR,GRCHAR,KACHAR,UKCHAR,PTREAD
3268-2        031 3286-2    4400  N   N    N   N  FEATURE,OFFLINE / DOCHAR,FRCHAR,GRCHAR,KACHAR,UKCHAR,PTREAD
3270-X        004 3277-2    3800  Y   Y    Y   Y  FEATURE,OFFLINE,DYNAMIC,LOCANY / ASCACHAR,ASCBCHAR,DOCHAR,FRCHAR,GRCHAR,KACHAR,
                                                    UKCHAR,AUDALRM,MAGCDRD,NUMLOCK,PTREAD,SELPEN,ASKY3277,DEKY3277,EBKY3277,OCKY3277,
                                                    KB70KEY,KB78KEY,KB81KEY
3272          027 3791L     7700  Y   Y    N   N  OFFLINE,DYNAMIC,OWNER(VTAM,OTHER)
3274          027 3274      7675  Y   Y    N   N  OFFLINE,DYNAMIC,OWNER(VTAM,OTHER)
3277-1        004 3277-1    3700  Y   Y    Y   N  FEATURE,OFFLINE,DYNAMIC,LOCANY / ASCACHAR,ASCBCHAR,DOCHAR,FRCHAR,GRCHAR,KACHAR,
                                                    UKCHAR,AUDALRM,MAGCDRD,NUMLOCK,PTREAD,SELPEN,ASKY3277,DEKY3277,EBKY3277,OCKY3277,
                                                    KB70KEY,KB78KEY,KB81KEY
3277-2        004 3277-2    3800  Y   Y    Y   Y  FEATURE,OFFLINE,DYNAMIC,LOCANY / ASCACHAR,ASCBCHAR,DOCHAR,FRCHAR,GRCHAR,KACHAR,
                                                    UKCHAR,AUDALRM,MAGCDRD,NUMLOCK,PTREAD,SELPEN,ASKY3277,DEKY3277,EBKY3277,OCKY3277,
                                                    KB70KEY,KB78KEY,KB81KEY
3278-1        004 3277-1    3700  Y   Y    Y   N  FEATURE,OFFLINE,DYNAMIC,LOCANY / ASCACHAR,ASCBCHAR,DOCHAR,FRCHAR,GRCHAR,KACHAR,
                                                    UKCHAR,AUDALRM,MAGCDRD,NUMLOCK,PTREAD,SELPEN,ASKY3277,DEKY3277,EBKY3277,OCKY3277,
                                                    KB70KEY,KB78KEY,KB81KEY
3278-2        004 3277-2    3800  Y   Y    Y   Y  FEATURE,OFFLINE,DYNAMIC,LOCANY / ASCACHAR,ASCBCHAR,DOCHAR,FRCHAR,GRCHAR,KACHAR,
                                                    UKCHAR,AUDALRM,MAGCDRD,NUMLOCK,PTREAD,SELPEN,ASKY3277,DEKY3277,EBKY3277,OCKY3277,
                                                    KB70KEY,KB78KEY,KB81KEY
3278-2A       004 3277-2    3800  Y   Y    Y   Y  FEATURE,OFFLINE,DYNAMIC,LOCANY / ASCACHAR,ASCBCHAR,DOCHAR,FRCHAR,GRCHAR,KACHAR,
                                                    UKCHAR,AUDALRM,MAGCDRD,NUMLOCK,PTREAD,SELPEN,ASKY3277,DEKY3277,EBKY3277,OCKY3277,
                                                    KB70KEY,KB78KEY,KB81KEY
3278-3        004 3277-2    3800  Y   Y    Y   Y  FEATURE,OFFLINE,DYNAMIC,LOCANY / ASCACHAR,ASCBCHAR,DOCHAR,FRCHAR,GRCHAR,KACHAR,
                                                    UKCHAR,AUDALRM,MAGCDRD,NUMLOCK,PTREAD,SELPEN,ASKY3277,DEKY3277,EBKY3277,OCKY3277,
                                                    KB70KEY,KB78KEY,KB81KEY
3278-4        004 3277-2    3800  Y   Y    Y   Y  FEATURE,OFFLINE,DYNAMIC,LOCANY / ASCACHAR,ASCBCHAR,DOCHAR,FRCHAR,GRCHAR,KACHAR,
                                                    UKCHAR,AUDALRM,MAGCDRD,NUMLOCK,PTREAD,SELPEN,ASKY3277,DEKY3277,EBKY3277,OCKY3277,
                                                    KB70KEY,KB78KEY,KB81KEY
3278-5        004 3277-2    3800  Y   Y    Y   Y  FEATURE,OFFLINE,DYNAMIC,LOCANY / ASCACHAR,ASCBCHAR,DOCHAR,FRCHAR,GRCHAR,KACHAR,
                                                    UKCHAR,AUDALRM,MAGCDRD,NUMLOCK,PTREAD,SELPEN,ASKY3277,DEKY3277,EBKY3277,OCKY3277,
                                                    KB70KEY,KB78KEY,KB81KEY
3279-S2B      004 3277-2    3800  Y   Y    Y   Y  FEATURE,OFFLINE,DYNAMIC,LOCANY / ASCACHAR,ASCBCHAR,DOCHAR,FRCHAR,GRCHAR,KACHAR,
                                                    UKCHAR,AUDALRM,MAGCDRD,NUMLOCK,PTREAD,SELPEN,ASKY3277,DEKY3277,EBKY3277,OCKY3277,
                                                    KB70KEY,KB78KEY,KB81KEY
3279-S3G      004 3277-2    3800  Y   Y    Y   Y  FEATURE,OFFLINE,DYNAMIC,LOCANY / ASCACHAR,ASCBCHAR,DOCHAR,FRCHAR,GRCHAR,KACHAR,
                                                    UKCHAR,AUDALRM,MAGCDRD,NUMLOCK,PTREAD,SELPEN,ASKY3277,DEKY3277,EBKY3277,OCKY3277,
                                                    KB70KEY,KB78KEY,KB81KEY
3279-2A       004 3277-2    3800  Y   Y    Y   Y  FEATURE,OFFLINE,DYNAMIC,LOCANY / ASCACHAR,ASCBCHAR,DOCHAR,FRCHAR,GRCHAR,KACHAR,
                                                    UKCHAR,AUDALRM,MAGCDRD,NUMLOCK,PTREAD,SELPEN,ASKY3277,DEKY3277,EBKY3277,OCKY3277,
                                                    KB70KEY,KB78KEY,KB81KEY
3279-2B       004 3277-2    3800  Y   Y    Y   Y  FEATURE,OFFLINE,DYNAMIC,LOCANY / ASCACHAR,ASCBCHAR,DOCHAR,FRCHAR,GRCHAR,KACHAR,
                                                    UKCHAR,AUDALRM,MAGCDRD,NUMLOCK,PTREAD,SELPEN,ASKY3277,DEKY3277,EBKY3277,OCKY3277,
                                                    KB70KEY,KB78KEY,KB81KEY
3279-2C       004 3277-2    3800  Y   Y    Y   Y  FEATURE,OFFLINE,DYNAMIC,LOCANY / ASCACHAR,ASCBCHAR,DOCHAR,FRCHAR,GRCHAR,KACHAR,
                                                    UKCHAR,AUDALRM,MAGCDRD,NUMLOCK,PTREAD,SELPEN,ASKY3277,DEKY3277,EBKY3277,OCKY3277,
                                                    KB70KEY,KB78KEY,KB81KEY
3279-2X       004 3277-2    3800  Y   Y    Y   Y  FEATURE,OFFLINE,DYNAMIC,LOCANY / ASCACHAR,ASCBCHAR,DOCHAR,FRCHAR,GRCHAR,KACHAR,
                                                    UKCHAR,AUDALRM,MAGCDRD,NUMLOCK,PTREAD,SELPEN,ASKY3277,DEKY3277,EBKY3277,OCKY3277,
                                                    KB70KEY,KB78KEY,KB81KEY
3279-3A       004 3277-2    3800  Y   Y    Y   Y  FEATURE,OFFLINE,DYNAMIC,LOCANY / ASCACHAR,ASCBCHAR,DOCHAR,FRCHAR,GRCHAR,KACHAR,
                                                    UKCHAR,AUDALRM,MAGCDRD,NUMLOCK,PTREAD,SELPEN,ASKY3277,DEKY3277,EBKY3277,OCKY3277,
                                                    KB70KEY,KB78KEY,KB81KEY
3279-3B       004 3277-2    3800  Y   Y    Y   Y  FEATURE,OFFLINE,DYNAMIC,LOCANY / ASCACHAR,ASCBCHAR,DOCHAR,FRCHAR,GRCHAR,KACHAR,
                                                    UKCHAR,AUDALRM,MAGCDRD,NUMLOCK,PTREAD,SELPEN,ASKY3277,DEKY3277,EBKY3277,OCKY3277,
                                                    KB70KEY,KB78KEY,KB81KEY
3279-3X       004 3277-2    3800  Y   Y    Y   Y  FEATURE,OFFLINE,DYNAMIC,LOCANY / ASCACHAR,ASCBCHAR,DOCHAR,FRCHAR,GRCHAR,KACHAR,
                                                    UKCHAR,AUDALRM,MAGCDRD,NUMLOCK,PTREAD,SELPEN,ASKY3277,DEKY3277,EBKY3277,OCKY3277,
                                                    KB70KEY,KB78KEY,KB81KEY
3284-1        031 3284-1    4100  N   N    N   N  FEATURE,OFFLINE / DOCHAR,FRCHAR,GRCHAR,KACHAR,UKCHAR,PTREAD
3284-2        031 3284-2    4200  N   N    N   N  FEATURE,OFFLINE / DOCHAR,FRCHAR,GRCHAR,KACHAR,UKCHAR,PTREAD
3286-1        031 3286-1    4300  N   N    N   N  FEATURE,OFFLINE / DOCHAR,FRCHAR,GRCHAR,KACHAR,UKCHAR,PTREAD
3286-2        031 3286-2    4400  N   N    N   N  FEATURE,OFFLINE / DOCHAR,FRCHAR,GRCHAR,KACHAR,UKCHAR,PTREAD
3287-1        031 3286-2    4400  N   N    N   N  FEATURE,OFFLINE / DOCHAR,FRCHAR,GRCHAR,KACHAR,UKCHAR,PTREAD
3287-1C       031 3286-1    4300  N   N    N   N  FEATURE,OFFLINE / DOCHAR,FRCHAR,GRCHAR,KACHAR,UKCHAR,PTREAD
3287-2        031 3286-2    4400  N   N    N   N  FEATURE,OFFLINE / DOCHAR,FRCHAR,GRCHAR,KACHAR,UKCHAR,PTREAD
3287-2C       031 3286-2    4400  N   N    N   N  FEATURE,OFFLINE / DOCHAR,FRCHAR,GRCHAR,KACHAR,UKCHAR,PTREAD
3288          031 3286-2    4400  N   N    N   N  FEATURE,OFFLINE / DOCHAR,FRCHAR,GRCHAR,KACHAR,UKCHAR,PTREAD
3289-1        031 3286-2    4400  N   N    N   N  FEATURE,OFFLINE / DOCHAR,FRCHAR,GRCHAR,KACHAR,UKCHAR,PTREAD
3289-2        031 3286-2    4400  N   N    N   N  FEATURE,OFFLINE / DOCHAR,FRCHAR,GRCHAR,KACHAR,UKCHAR,PTREAD
3290          004 3277-2    3800  Y   Y    Y   Y  FEATURE,OFFLINE,DYNAMIC,LOCANY / ASCACHAR,ASCBCHAR,DOCHAR,FRCHAR,GRCHAR,KACHAR,
                                                    UKCHAR,AUDALRM,MAGCDRD,NUMLOCK,PTREAD,SELPEN,ASKY3277,DEKY3277,EBKY3277,OCKY3277,
                                                    KB70KEY,KB78KEY,KB81KEY
3300          022 AFP1      1750  Y   Y    N   N  FEATURE,OFFLINE,DYNAMIC / BURSTER
3380          002 3380       290  Y   Y    Y   N  FEATURE,OFFLINE,DYNAMIC,LOCANY / SHARED,SHAREDUP
3380-CJ2      002 3380       290  Y   Y    Y   N  FEATURE,OFFLINE,DYNAMIC,LOCANY / SHARED,SHAREDUP
3380A         002 3380       290  Y   Y    Y   N  PRIVATE: WLMPAV
3380B         002 3380       290  Y   Y    Y   N  FEATURE,OFFLINE,DYNAMIC,LOCANY,PRIVATE: WLMPAV / SHARED,SHAREDUP
3390          002 3390       280  Y   Y    Y   N  FEATURE,OFFLINE,DYNAMIC,LOCANY,PRIVATE: READ-ONLY / SHARED,SHAREDUP
3390A         002 3390       280  Y   Y    Y   N  PRIVATE: WLMPAV
3390B         002 3390       280  Y   Y    Y   N  FEATURE,OFFLINE,DYNAMIC,LOCANY,PRIVATE: WLMPAV,READ-ONLY / SHARED,SHAREDUP
3390D         002 3390       280  Y   Y    Y   N  FEATURE,DYNAMIC,LOCANY,PRIVATE: WLMPAV / SHARED
3390S         002 3390       280  Y   Y    Y   N  FEATURE,DYNAMIC,LOCANY,PRIVATE: WLMPAV / SHARED
3420-3        005 3400-3    1210  Y   Y    Y   N  FEATURE,OFFLINE,DYNAMIC,LOCANY / DATACONV,DUALDENS,SHARABLE,7-TRACK,9-TRACK
3420-4        005 3400-5    1200  Y   Y    Y   N  FEATURE,OFFLINE,DYNAMIC,LOCANY / SHARABLE,9-TRACK,OPT1600
```

Figure 316. Supported Hardware Report (Part 17 of 23)

```
                                        SUPPORTED HARDWARE - MVS DEVICES              TIME: 10:24  DATE: 2019-03-04  PAGE X-  18
TYPE-MODEL    UIM GENERIC  DPREF DYN 4DIG UCB NIP SUPPORTED PARAMETERS (VALUES) / FEATURES
_____________ ___ ________ ______ __ ____ __ __ ____________________________________________________________________________________
3420-5        005 3400-3    1210  Y   Y    Y   N  FEATURE,OFFLINE,DYNAMIC,LOCANY / DATACONV,DUALDENS,SHARABLE,7-TRACK,9-TRACK
3420-6        005 3400-5    1200  Y   Y    Y   N  FEATURE,OFFLINE,DYNAMIC,LOCANY / SHARABLE,9-TRACK,OPT1600
3420-7        005 3400-3    1210  Y   Y    Y   N  FEATURE,OFFLINE,DYNAMIC,LOCANY / DATACONV,DUALDENS,SHARABLE,7-TRACK,9-TRACK
3420-8        005 3400-5    1200  Y   Y    Y   N  FEATURE,OFFLINE,DYNAMIC,LOCANY / SHARABLE,9-TRACK,OPT1600
3422          005 3400-6    1220  Y   Y    Y   N  FEATURE,OFFLINE,DYNAMIC,LOCANY / SHARABLE,9-TRACK,OPT1600
3423          005 3423      1380  Y   Y    Y   N  OFFLINE,DYNAMIC,LOCANY
3424          005 3400-6    1220  Y   Y    Y   N  FEATURE,OFFLINE,DYNAMIC,LOCANY / SHARABLE
3430          005 3400-6    1220  Y   Y    Y   N  FEATURE,OFFLINE,DYNAMIC,LOCANY / 9-TRACK,OPT1600
3471          004 3277-2    3800  Y   Y    Y   Y  FEATURE,OFFLINE,DYNAMIC,LOCANY / ASCACHAR,ASCBCHAR,DOCHAR,FRCHAR,GRCHAR,KACHAR,
                                                    UKCHAR,AUDALRM,MAGCDRD,NUMLOCK,PTREAD,SELPEN,ASKY3277,DEKY3277,EBKY3277,OCKY3277,
                                                    KB70KEY,KB78KEY,KB81KEY
3472          004 3277-2    3800  Y   Y    Y   Y  FEATURE,OFFLINE,DYNAMIC,LOCANY / ASCACHAR,ASCBCHAR,DOCHAR,FRCHAR,GRCHAR,KACHAR,
                                                    UKCHAR,AUDALRM,MAGCDRD,NUMLOCK,PTREAD,SELPEN,ASKY3277,DEKY3277,EBKY3277,OCKY3277,
                                                    KB70KEY,KB78KEY,KB81KEY
3480          005 3480      1100  Y   Y    Y   N  FEATURE,OFFLINE,DYNAMIC,LOCANY,PRIVATE: LIBRARY,AUTOSWITCH,LIBRARY-ID,LIBPORT-ID,
                                                    MTL / SHARABLE,COMPACT
3481          004 3277-2    3800  Y   Y    Y   Y  FEATURE,OFFLINE,DYNAMIC,LOCANY / ASCACHAR,ASCBCHAR,DOCHAR,FRCHAR,GRCHAR,KACHAR,
                                                    UKCHAR,AUDALRM,MAGCDRD,NUMLOCK,PTREAD,SELPEN,ASKY3277,DEKY3277,EBKY3277,OCKY3277,
                                                    KB70KEY,KB78KEY,KB81KEY
3482          004 3277-2    3800  Y   Y    Y   Y  FEATURE,OFFLINE,DYNAMIC,LOCANY / ASCACHAR,ASCBCHAR,DOCHAR,FRCHAR,GRCHAR,KACHAR,
                                                    UKCHAR,AUDALRM,MAGCDRD,NUMLOCK,PTREAD,SELPEN,ASKY3277,DEKY3277,EBKY3277,OCKY3277,
                                                    KB70KEY,KB78KEY,KB81KEY
3483          004 3277-2    3800  Y   Y    Y   Y  FEATURE,OFFLINE,DYNAMIC,LOCANY / ASCACHAR,ASCBCHAR,DOCHAR,FRCHAR,GRCHAR,KACHAR,
                                                    UKCHAR,AUDALRM,MAGCDRD,NUMLOCK,PTREAD,SELPEN,ASKY3277,DEKY3277,EBKY3277,OCKY3277,
                                                    KB70KEY,KB78KEY,KB81KEY
3490          005 3490      1000  Y   Y    Y   N  FEATURE,OFFLINE,DYNAMIC,LOCANY,PRIVATE: LIBRARY,AUTOSWITCH,LIBRARY-ID,LIBPORT-ID,
                                                    MTL / SHARABLE,COMPACT
3505          012 3505      2400  Y   Y    N   N  FEATURE,OFFLINE,DYNAMIC / CARDIMAGE
3525          012 3525      2500  Y   Y    N   N  FEATURE,OFFLINE,DYNAMIC / CARDIMAGE,TWOLINE,MULTILINE
3540          032 3540      5600  N   N    N   N  OFFLINE
3590          005 3590-1     950  Y   Y    Y   N  FEATURE,OFFLINE,DYNAMIC,LOCANY,PRIVATE: LIBRARY,AUTOSWITCH,LIBRARY-ID,LIBPORT-ID,
                                                    MTL / SHARABLE,COMPACT
3704          023 3704      7800  Y   Y    N   N  ADAPTER(CA1),OFFLINE,DYNAMIC,OWNER(VTAM,OTHER)
3705          023 3705      7600  Y   Y    N   N  (R)ADAPTER(TYPE1,TYPE2,TYPE3,TYPE4),OFFLINE,DYNAMIC,OWNER(VTAM,OTHER)
3720          023 3720      7575  Y   Y    N   N  (R)ADAPTER(TYPE5),OFFLINE,DYNAMIC,OWNER(VTAM,OTHER)
3725          023 3725      7550  Y   Y    N   N  (R)ADAPTER(TYPE5),OFFLINE,DYNAMIC,OWNER(VTAM,OTHER)
3737          014 CTC       8400  Y   Y    Y   N  FEATURE,OFFLINE,DYNAMIC,LOCANY / 370
3745          023 3745      7450  Y   Y    N   N  (R)ADAPTER(TYPE6,TYPE7),OFFLINE,DYNAMIC,OWNER(VTAM,OTHER)
3746          023 3746      7551  Y   Y    N   N  (R)ADAPTER(TYPE6,TYPE7),OFFLINE,DYNAMIC,OWNER(VTAM,OTHER)
3767-1        024 AAA8      6800  N   N    N   N  (R)ADAPTER(IBM1),FEATURE,OFFLINE,SETADDR(0,1,2,3),(R)TCU(2701,2702,
                                                    2703) / AUTOPOLL,AUTOANSR,AUTOCALL,CHECKING,INTERRUPT,OIU,SCONTROL,XCONTROL
3767-2        024 AAA8      6800  N   N    N   N  (R)ADAPTER(IBM1),FEATURE,OFFLINE,SETADDR(0,1,2,3),(R)TCU(2701,2702,
                                                    2703) / AUTOPOLL,AUTOANSR,AUTOCALL,CHECKING,INTERRUPT,OIU,SCONTROL,XCONTROL
3791L         027 3791L     7700  Y   Y    N   N  OFFLINE,DYNAMIC,OWNER(VTAM,OTHER)
3800-1        011 3800      1780  Y   Y    N   N  FEATURE,OFFLINE,DYNAMIC / BURSTER,CGS1,CGS2
3800-3        011 3800      1780  Y   Y    N   N  FEATURE,OFFLINE,DYNAMIC / BURSTER
3800-6        011 3800      1780  Y   Y    N   N  FEATURE,OFFLINE,DYNAMIC / BURSTER,CGS1,CGS2
3800-8        011 3800      1780  Y   Y    N   N  FEATURE,OFFLINE,DYNAMIC / BURSTER
3812          031 3286-2    4400  N   N    N   N  FEATURE,OFFLINE / DOCHAR,FRCHAR,GRCHAR,KACHAR,UKCHAR,PTREAD
3820          022 3820      1800  Y   Y    N   N  OFFLINE,DYNAMIC
3825          022 AFP1      1750  Y   Y    N   N  FEATURE,OFFLINE,DYNAMIC / BURSTER
3827          022 AFP1      1750  Y   Y    N   N  FEATURE,OFFLINE,DYNAMIC / BURSTER
3828          022 AFP1      1750  Y   Y    N   N  FEATURE,OFFLINE,DYNAMIC / BURSTER
3829          022 AFP1      1750  Y   Y    N   N  FEATURE,OFFLINE,DYNAMIC / BURSTER
3831          022 AFP1      1750  Y   Y    N   N  FEATURE,OFFLINE,DYNAMIC / BURSTER
3835          022 AFP1      1750  Y   Y    N   N  FEATURE,OFFLINE,DYNAMIC / BURSTER
3886          032 3886      4900  N   N    N   N  OFFLINE
3890          032 3890      4800  N   N    N   N  OFFLINE
3895          032 3895      5400  N   N    N   N  OFFLINE
3900          022 AFP1      1750  Y   Y    N   N  FEATURE,OFFLINE,DYNAMIC / BURSTER
3935          022 AFP1      1750  Y   Y    N   N  FEATURE,OFFLINE,DYNAMIC / BURSTER
3995          053 3995      8600  Y   Y    Y   N  OFFLINE,DYNAMIC,LOCANY
3995-SDA      053 3995      8600  Y   Y    Y   N  OFFLINE,DYNAMIC,LOCANY
3995-151      002 3390       280  Y   Y    Y   N  FEATURE,OFFLINE,DYNAMIC,LOCANY / SHARED,SHAREDUP
3995-153      002 3390       280  Y   Y    Y   N  FEATURE,OFFLINE,DYNAMIC,LOCANY / SHARED,SHAREDUP
4000          022 AFP1      1750  Y   Y    N   N  FEATURE,OFFLINE,DYNAMIC / BURSTER
4100          022 AFP1      1750  Y   Y    N   N  FEATURE,OFFLINE,DYNAMIC / BURSTER
4224          031 3286-2    4400  N   N    N   N  FEATURE,OFFLINE / DOCHAR,FRCHAR,GRCHAR,KACHAR,UKCHAR,PTREAD
4245          012 4245      1890  Y   Y    N   N  OFFLINE,DYNAMIC
4248          012 4248      1850  Y   Y    N   N  OFFLINE,DYNAMIC
4250          031 3286-2    4400  N   N    N   N  FEATURE,OFFLINE / DOCHAR,FRCHAR,GRCHAR,KACHAR,UKCHAR,PTREAD
4370          022 AFP1      1750  Y   Y    N   N  FEATURE,OFFLINE,DYNAMIC / BURSTER
5210          031 3286-2    4400  N   N    N   N  FEATURE,OFFLINE / DOCHAR,FRCHAR,GRCHAR,KACHAR,UKCHAR,PTREAD
7171          027 3791L     7700  Y   Y    N   N  OFFLINE,DYNAMIC,OWNER(VTAM,OTHER)
7770-3        023 AAAC      7200  Y   Y    N   N  OFFLINE,DYNAMIC,OWNER(VTAM,OTHER)
8232          014 CTC       8400  Y   Y    Y   N  FEATURE,OFFLINE,DYNAMIC,LOCANY / 370
83B3          025 AAA6      6600  N   N    N   N  (R)ADAPTER(TELE1),OFFLINE,SETADDR(0,1,2,3),(R)TCU(2701,2702,2703)
9032          051 SWCH     10500  Y   Y    Y   N  OFFLINE,DYNAMIC,LOCANY
9032-3        051 SWCH     10500  Y   Y    Y   N  OFFLINE,DYNAMIC,LOCANY
9032-5        051 SWCH     10500  Y   Y    Y   N  OFFLINE,DYNAMIC,LOCANY
9033          051 SWCH     10500  Y   Y    Y   N  OFFLINE,DYNAMIC,LOCANY
9345          002 9345       270  Y   Y    Y   N  FEATURE,OFFLINE,DYNAMIC,LOCANY / SHARED,SHAREDUP
```

Figure 317. Supported Hardware Report (Part 18 of 23)

```
                                        SUPPORTED HARDWARE - MVS DEVICES              TIME: 10:24  DATE: 2019-03-04  PAGE X-  19
        KEY                                 KEY DESCRIPTION
        ---                                 ---------------
        TYPE-MODEL                       -  SUPPORTED DEVICE TYPE
        UIM                              -  INDEX OF UNIT INFORMATION MODULE SUPPORTING THIS DEVICE TYPE
        GENERIC                          -  GENERIC DEVICE TYPE
        DPREF                            -  DEFAULT DEVICE PREFERENCE VALUE
        DYN                              -  DEVICE SUPPORTS DYNAMIC I/O RECONFIGURATION
        4DIG                             -  DEVICE TYPE SUPPORTS DEVICE NUMBERS GREATER THAN 0FFF
        UCB                              -  DEVICE TYPE SUPPORTS UCB BEING LOCATED ABOVE 16 MB
        NIP                              -  DEVICE TYPE SUPPORTED AS NIP CONSOLE
        SUPPORTED PARAMETERS (VALUES) / FEATURES  -  LIST OF SUPPORTED PARAMETERS (WITH SELECTION VALUES) AND FEATURES
        Y                                -  DEVICE TYPE HAS THE CAPABILITY
        N                                -  CAPABILITY IS NOT AVAILABLE
        (R)                              -  PARAMETER IS REQUIRED
        PRIVATE:                         -  START OF PARAMETERS PRIVATE TO UIM
```

Figure 318. Supported Hardware Report (Part 19 of 23)

```
                                        SUPPORTED HARDWARE - VM DEVICES              TIME: 10:24  DATE: 2019-03-04  PAGE X-  20
TYPE-MODEL    UIM VM D/T        CONS        SUPPORTED PARAMETERS (VALUES) / FEATURES
____________ ___ _____________ ____        ________________________________________________________________________________________
AFP1-0        278 AFP1           N          OFFLINE,UIRATE,EQID
BCTC          270 CTCA           N          OFFLINE,UIRATE,EQID
BSC1          282 3705           N          (R)ADAPTER(BSCA),BASEADD,OFFLINE,SETADDR(0,1,2,3,4),UIRATE,EQID
BSC2          282 3705           N          (R)ADAPTER(BSCA),BASEADD,OFFLINE,SETADDR(0,1,2,3,4),UIRATE,EQID
BSC3          282 3705           N          (R)ADAPTER(BSCA),BASEADD,OFFLINE,SETADDR(0,1,2,3,4),UIRATE,EQID
CTC           270 CTCA           N          OFFLINE,UIRATE,EQID
CTCA          270 CTCA           N          OFFLINE,UIRATE,EQID
DUMMY         306 DUMMY          N          (R)CLASS(DASD,TAPE,TERM,DISPLAY,RDR,PRT,PUN,SWITCH),OFFLINE,UIRATE,EQID / DPS,RESERVE
FBASCSI       254 FBASCSI        N          OFFLINE,UIRATE,EQID,(R)ATTR(1750,2105,2107,2145,XIV,SCSI),(R)FCPDEV,(R)WWPN,(R)LUN,
                                            PREFPATH
FB512         258 FB-512         N          OFFLINE,SHARED,UIRATE,MDC(OFF,DFLTOFF,DFLTON),EQID
FCP           254 FCP            N          OFFLINE,UIRATE,EQID
FCTC          270 CTCA           N          OFFLINE,UIRATE,EQID
HFGD          291 HFGD           N          OFFLINE,UIRATE,EQID
ICABSCA       308 ICA            N          (R)ADAPTER(BSCA),OFFLINE,UIRATE,EQID
ICAELAN       308 ICA            N          (R)ADAPTER(ELAN),OFFLINE,UIRATE,EQID
ICAHDLC       308 ICA            N          (R)ADAPTER(HDLC),OFFLINE,UIRATE,EQID
ICAILAN       308 ICA            N          (R)ADAPTER(ILAN),OFFLINE,UIRATE,EQID
ICASDLC       308 ICA            N          (R)ADAPTER(SDLC),OFFLINE,UIRATE,EQID
ICATELE2      308 ICA            N          (R)ADAPTER(TELE2),OFFLINE,UIRATE,EQID
IQD           314 OSA            N          OFFLINE,UIRATE,EQID
OSA           314 OSA            N          OFFLINE,UIRATE,EQID
OSA-M         314 OSA            N          OFFLINE,UIRATE,EQID
OSA-X         314 OSA            N          OFFLINE,UIRATE,EQID
OSAD          314 OSAD           N          OFFLINE,UIRATE,EQID
OSN           314 OSN            N          OFFLINE,UIRATE,EQID
RS6K          312 3088           N          OFFLINE,UIRATE,EQID
SCTC          270 CTCA           N          OFFLINE,UIRATE,EQID
SWCH          307 9032           N          OFFLINE,UIRATE,EQID
TWX           281 3705           N          (R)ADAPTER(TELE2),BASEADD,OFFLINE,SETADDR(0,1,2,3,4),UIRATE,EQID
1050          280 3705           N          (R)ADAPTER(IBM1),BASEADD,OFFLINE,SETADDR(0,1,2,3,4),UIRATE,EQID
1050X         280 3705           N          (R)ADAPTER(IBM1),BASEADD,OFFLINE,SETADDR(0,1,2,3,4),UIRATE,EQID
1287          288 1287           N          OFFLINE,UIRATE,EQID
1288          288 1288           N          OFFLINE,UIRATE,EQID
1403-N1       268 1403           N          AFP,CHARS,CLASS,DEST,FOLD,FORM,IMAGE,OFFLINE,SEP,UIRATE,EQID / UNVCHSET
1403-2        268 1403           N          AFP,CHARS,CLASS,DEST,FOLD,FORM,IMAGE,OFFLINE,SEP,UIRATE,EQID / UNVCHSET
1403-3        268 1403           N          AFP,CHARS,CLASS,DEST,FOLD,FORM,IMAGE,OFFLINE,SEP,UIRATE,EQID / UNVCHSET
1403-5        268 1403           N          AFP,CHARS,CLASS,DEST,FOLD,FORM,IMAGE,OFFLINE,SEP,UIRATE,EQID / UNVCHSET
1403-7        268 1403           N          AFP,CHARS,CLASS,DEST,FOLD,FORM,IMAGE,OFFLINE,SEP,UIRATE,EQID / UNVCHSET
2032          307 2032           N          OFFLINE,UIRATE,EQID
2250-3        277 2250           N          OFFLINE,UIRATE,EQID
2305-2        269 2305-2         N          OFFLINE,SHARED,UIRATE,EQID
2501-B1       266 2501           N          CLASS,OFFLINE,UIRATE,EQID
2501-B2       266 2501           N          CLASS,OFFLINE,UIRATE,EQID
2540P-1       268 2540P          N          CLASS,FORM,OFFLINE,SEP,UIRATE,EQID
2540R-1       266 2540R          N          CLASS,OFFLINE,UIRATE,EQID
2701          279 2701           N          (R)ADAPTER(BSCA,IBM1,TELE2),OFFLINE,UIRATE,EQID
2710          278 AFP1           N          OFFLINE,UIRATE,EQID
2740          280 3705           N          (R)ADAPTER(IBM1),BASEADD,OFFLINE,SETADDR(0,1,2,3,4),UIRATE,EQID
2740C         280 3705           N          (R)ADAPTER(IBM1),BASEADD,OFFLINE,SETADDR(0,1,2,3,4),UIRATE,EQID
2740X         280 3705           N          (R)ADAPTER(IBM1),BASEADD,OFFLINE,SETADDR(0,1,2,3,4),UIRATE,EQID
2741C         281 3705           N          (R)ADAPTER(IBM1),BASEADD,OFFLINE,SETADDR(0,1,2,3,4),UIRATE,EQID
2741P         281 3705           N          (R)ADAPTER(IBM1),BASEADD,OFFLINE,SETADDR(0,1,2,3,4),UIRATE,EQID
3088          270 3088           N          OFFLINE,UIRATE,EQID
3151          281 3705           N          (R)ADAPTER(TELE2),BASEADD,OFFLINE,SETADDR(0,1,2,3,4),UIRATE,EQID
3160          278 AFP1           N          OFFLINE,UIRATE,EQID
3161          281 3705           N          (R)ADAPTER(TELE2),BASEADD,OFFLINE,SETADDR(0,1,2,3,4),UIRATE,EQID
3162          281 3705           N          (R)ADAPTER(TELE2),BASEADD,OFFLINE,SETADDR(0,1,2,3,4),UIRATE,EQID
3163          281 3705           N          (R)ADAPTER(TELE2),BASEADD,OFFLINE,SETADDR(0,1,2,3,4),UIRATE,EQID
3167          281 3705           N          (R)ADAPTER(TELE2),BASEADD,OFFLINE,SETADDR(0,1,2,3,4),UIRATE,EQID
3170          278 AFP1           N          OFFLINE,UIRATE,EQID
3172          313 3172           N          OFFLINE,UIRATE,EQID
3174          283 3705           N          (R)ADAPTER(TYPE4),CPNAME,(R)MODEL(A1,A2,B1,B2,B3,B4,C1,C2,C3,C4,C5,C6,D1,D2,D3,D4,D5,D6,
                                            D7,D8,E1,E2,E3,E4,E5,E6,E7,E8,F1,F2,F3,F4,F5,F6,F7,F8,G1,G2,G3,G4,G5,G6,G7,G8,H1,H2,H3,
                                            H4,H5,H6,H7,H8,J1,J2,J3,J4,K1,K2,K3,K4,L1,L2,L3,L4,1,2,3,4,5,6,7,8),OFFLINE,UIRATE,EQID
3178          260 3178           Y          MODEL(2,3,4,5),OFFLINE,UIRATE,EQID / EMUL3270,E3270HLD,OPRDR
3179          260 3179           Y          MODEL(2,3),OFFLINE,UIRATE,EQID / EMUL3270,E3270HLD,OPRDR
3180          260 3180           Y          MODEL(2,3,4,5),OFFLINE,UIRATE,EQID / EMUL3270,E3270HLD,OPRDR
3180-1        260 3180           Y          OFFLINE,UIRATE,EQID / EMUL3270,E3270HLD,OPRDR
3190          260 3190           Y          OFFLINE,UIRATE,EQID / EMUL3270,E3270HLD,OPRDR
3191          260 3190           Y          OFFLINE,UIRATE,EQID / EMUL3270,E3270HLD,OPRDR
3192          260 3190           Y          OFFLINE,UIRATE,EQID / EMUL3270,E3270HLD,OPRDR
3192-F        260 3190           Y          OFFLINE,UIRATE,EQID / EMUL3270,E3270HLD,OPRDR
3193          260 3190           Y          OFFLINE,UIRATE,EQID / EMUL3270,E3270HLD,OPRDR
3194          260 3190           Y          OFFLINE,UIRATE,EQID / EMUL3270,E3270HLD,OPRDR
3203-5        268 3203-5         N          AFP,CHARS,CLASS,DEST,FCB,FOLD,FORM,IMAGE,OFFLINE,SEP,UIRATE,LIMIT,EQID / UNVCHSET
3211          268 3211           N          AFP,CHARS,CLASS,DEST,FCB,FOLD,FORM,IMAGE,INDEX,OFFLINE,SEP,UIRATE,LIMIT,EQID / UNVCHSET
3215          260 3215           Y          OFFLINE,UIRATE,EQID
3216          278 AFP1           N          OFFLINE,UIRATE,EQID
3250          277 3250           N          OFFLINE,UIRATE,EQID
3251          277 3250           N          OFFLINE,UIRATE,EQID
3262-13       287 3287           N          OFFLINE,UIRATE,EQID
3262-3        287 3287           N          OFFLINE,UIRATE,EQID
3262-5        268 3262           N          AFP,CHARS,CLASS,DEST,FCB,FOLD,FORM,IMAGE,OFFLINE,SEP,UIRATE,LIMIT,EQID
```

Figure 319. Supported Hardware Report (Part 20 of 23)

```
                                        SUPPORTED HARDWARE - VM DEVICES              TIME: 10:24  DATE: 2019-03-04  PAGE X-  21
TYPE-MODEL    UIM VM D/T        CONS        SUPPORTED PARAMETERS (VALUES) / FEATURES
------------- --- ------------- ----        ----------------------------------------------------------------------------------------
3268-2        287 3287           N          OFFLINE,UIRATE,EQID
3270          260 3270           Y          MODEL(2A,2C,2,3,4,5),OFFLINE,UIRATE,EQID / EMUL3270,E3270HLD,OPRDR
3270-X        260 3270           Y          OFFLINE,UIRATE,EQID / EMUL3270,E3270HLD,OPRDR
3274          283 3705           N          (R)ADAPTER(TYPE4),CPNAME,(R)MODEL(A1,A2,B1,B2,B3,B4,C1,C2,C3,C4,C5,C6,D1,D2,D3,D4,D5,D6,
                                            D7,D8,E1,E2,E3,E4,E5,E6,E7,E8,F1,F2,F3,F4,F5,F6,F7,F8,G1,G2,G3,G4,G5,G6,G7,G8,H1,H2,H3,
                                            H4,H5,H6,H7,H8,J1,J2,J3,J4,K1,K2,K3,K4,L1,L2,L3,L4,1,2,3,4,5,6,7,8),OFFLINE,UIRATE,EQID
3277-1        260 3277           Y          OFFLINE,UIRATE,EQID / EMUL3270,E3270HLD,OPRDR
3277-2        260 3277           Y          OFFLINE,UIRATE,EQID / EMUL3270,E3270HLD,OPRDR
3278-1        260 3278           Y          OFFLINE,UIRATE,EQID / EMUL3270,E3270HLD,OPRDR
3278-2        260 3278           Y          OFFLINE,UIRATE,EQID / EMUL3270,E3270HLD,OPRDR
3278-2A       260 3278-2A        Y          OFFLINE,UIRATE,EQID / EMUL3270,E3270HLD,OPRDR
3278-3        260 3278-3         Y          OFFLINE,UIRATE,EQID / EMUL3270,E3270HLD,OPRDR
3278-4        260 3278-4         Y          OFFLINE,UIRATE,EQID / EMUL3270,E3270HLD,OPRDR
3278-5        260 3278-5         Y          OFFLINE,UIRATE,EQID / EMUL3270,E3270HLD,OPRDR
3279-S2B      260 3279           Y          OFFLINE,UIRATE,EQID / EMUL3270,E3270HLD,OPRDR
3279-S3G      260 3279           Y          OFFLINE,UIRATE,EQID / EMUL3270,E3270HLD,OPRDR
3279-2        260 3279           Y          OFFLINE,UIRATE,EQID / EMUL3270,E3270HLD,OPRDR
3279-2A       260 3279           Y          OFFLINE,UIRATE,EQID / EMUL3270,E3270HLD,OPRDR
3279-2B       260 3279           Y          OFFLINE,UIRATE,EQID / EMUL3270,E3270HLD,OPRDR
3279-2C       260 3279-2C        Y          OFFLINE,UIRATE,EQID / EMUL3270,E3270HLD,OPRDR
3279-2X       260 3279           Y          OFFLINE,UIRATE,EQID / EMUL3270,E3270HLD,OPRDR
3279-3        260 3279-3         Y          OFFLINE,UIRATE,EQID / EMUL3270,E3270HLD,OPRDR
3279-3A       260 3279           Y          OFFLINE,UIRATE,EQID / EMUL3270,E3270HLD,OPRDR
3279-3B       260 3279           Y          OFFLINE,UIRATE,EQID / EMUL3270,E3270HLD,OPRDR
3279-3X       260 3279           Y          OFFLINE,UIRATE,EQID / EMUL3270,E3270HLD,OPRDR
3284-1        287 3284           N          OFFLINE,UIRATE,EQID
3284-2        287 3284           N          OFFLINE,UIRATE,EQID
3286-1        287 3286           N          OFFLINE,UIRATE,EQID
3286-2        287 3286           N          OFFLINE,UIRATE,EQID
3287-1        287 3287           N          OFFLINE,UIRATE,EQID
3287-1C       287 3287           N          OFFLINE,UIRATE,EQID
3287-2        287 3287           N          OFFLINE,UIRATE,EQID
3287-2C       287 3287           N          OFFLINE,UIRATE,EQID
3288          287 3288           N          OFFLINE,UIRATE,EQID
3289-1        287 3289           N          OFFLINE,UIRATE,EQID
3289-2        287 3289           N          OFFLINE,UIRATE,EQID
3290          260 3290           Y          OFFLINE,UIRATE,EQID / EMUL3270,E3270HLD,OPRDR
3300          278 AFP1           N          OFFLINE,UIRATE,EQID
3330-1        257 3330-1         N          OFFLINE,SHARED,UIRATE,EQID
3330-11       257 3330-11        N          OFFLINE,SHARED,UIRATE,EQID
3330-2        257 3330-2         N          OFFLINE,SHARED,UIRATE,EQID
3330V         271 3330           N          OFFLINE,SHARED,UIRATE,EQID
3333-1        257 3330-1         N          OFFLINE,SHARED,UIRATE,EQID
3333-11       257 3330-11        N          OFFLINE,SHARED,UIRATE,EQID
3340          257 3340           N          OFFLINE,SHARED,UIRATE,EQID
3344          257 3340           N          OFFLINE,SHARED,UIRATE,EQID
3350          257 3350           N          OFFLINE,SHARED,UIRATE,EQID
3370          258 3370           N          OFFLINE,SHARED,UIRATE,MDC(OFF,DFLTOFF,DFLTON),EQID
3375          258 3375           N          OFFLINE,SHARED,UIRATE,MDC(OFF,DFLTOFF,DFLTON),EQID
3380          258 3380           N          OFFLINE,SHARED,UIRATE,MDC(OFF,DFLTOFF,DFLTON),EQID
3380-CJ2      258 3380           N          OFFLINE,SHARED,UIRATE,MDC(OFF,DFLTOFF,DFLTON),EQID
3380A         258 3380A          N
3380B         258 3380B          N          OFFLINE,SHARED,UIRATE,MDC(OFF,DFLTOFF,DFLTON),EQID
3390          258 3390           N          OFFLINE,SHARED,UIRATE,MDC(OFF,DFLTOFF,DFLTON),EQID
3390A         258 3390A          N
3390B         258 3390B          N          OFFLINE,SHARED,UIRATE,MDC(OFF,DFLTOFF,DFLTON),EQID
3420-3        261 3420-3         N          OFFLINE,UIRATE,EQID / CONV,DUALDENS,TRANS,7-TRACK
3420-4        261 3420-4         N          OFFLINE,UIRATE,EQID / CONV,DUALDENS,TRANS,7-TRACK
3420-5        261 3420-5         N          OFFLINE,UIRATE,EQID / CONV,DUALDENS,TRANS,7-TRACK
3420-6        261 3420-6         N          OFFLINE,UIRATE,EQID / CONV,DUALDENS,TRANS,7-TRACK
3420-7        261 3420-7         N          OFFLINE,UIRATE,EQID / CONV,DUALDENS,TRANS,7-TRACK
3420-8        261 3420-8         N          OFFLINE,UIRATE,EQID / CONV,DUALDENS,TRANS,7-TRACK
3422          261 3422           N          OFFLINE,UIRATE,EQID
3424          261 3424           N          OFFLINE,UIRATE,EQID
3430          261 3430           N          OFFLINE,UIRATE,EQID
3480          261 3480           N          OFFLINE,UIRATE,EQID
3490          261 3490           N          OFFLINE,UIRATE,EQID
3505          266 3505           N          CLASS,OFFLINE,UIRATE,EQID
3525          268 3525           N          CLASS,FORM,OFFLINE,UIRATE,EQID
3540          288 3540           N          OFFLINE,UIRATE,EQID
3590          261 3590           N          OFFLINE,UIRATE,EQID
3704          279 3704           N          (R)ADAPTER(BSCA,IBM1,TELE2,TYPE1),BASEADD,CPNAME,MODEL(A1,A2,A3,A4,1,2,3,4),OFFLINE,
                                            SETADDR(0,1,2,3,4),UIRATE,EQID
3705          279 3705           N          (R)ADAPTER(BSCA,IBM1,TELE2,TYPE4),BASEADD,CPNAME,MODEL(A1,A2,B1,B2,B3,B4,C1,C2,C3,C4,C5,
                                            C6,D1,D2,D3,D4,D5,D6,D7,D8,E1,E2,E3,E4,E5,E6,E7,E8,F1,F2,F3,F4,F5,F6,F7,F8,G1,G2,G3,G4,
                                            G5,G6,G7,G8,H1,H2,H3,H4,H5,H6,H7,H8,J1,J2,J3,J4,K1,K2,K3,K4,L1,L2,L3,L4,1,2,3,4,5,6,7,
                                            8),OFFLINE,SETADDR(0,1,2,3,4),UIRATE,EQID
3720          279 3705           N          (R)ADAPTER(TYPE4),CPNAME,(R)MODEL(A1,A2,B1,B2,B3,B4,C1,C2,C3,C4,C5,C6,D1,D2,D3,D4,D5,D6,
                                            D7,D8,E1,E2,E3,E4,E5,E6,E7,E8,F1,F2,F3,F4,F5,F6,F7,F8,G1,G2,G3,G4,G5,G6,G7,G8,H1,H2,H3,
                                            H4,H5,H6,H7,H8,J1,J2,J3,J4,K1,K2,K3,K4,L1,L2,L3,L4,1,2,3,4,5,6,7,8),OFFLINE,UIRATE,EQID
3725          279 3705           N          (R)ADAPTER(BSCA,IBM1,TELE2,TYPE4),BASEADD,CPNAME,MODEL(A1,A2,B1,B2,B3,B4,C1,C2,C3,C4,C5,
                                            C6,D1,D2,D3,D4,D5,D6,D7,D8,E1,E2,E3,E4,E5,E6,E7,E8,F1,F2,F3,F4,F5,F6,F7,F8,G1,G2,G3,G4,
                                            G5,G6,G7,G8,H1,H2,H3,H4,H5,H6,H7,H8,J1,J2,J3,J4,K1,K2,K3,K4,L1,L2,L3,L4,1,2,3,4,5,6,7,
                                            8),OFFLINE,SETADDR(0,1,2,3,4),UIRATE,EQID
```

Figure 320. Supported Hardware Report (Part 21 of 23)

```
                                        SUPPORTED HARDWARE - VM DEVICES               TIME: 10:24  DATE: 2019-03-04  PAGE X-  22
TYPE-MODEL    UIM VM D/T        CONS        SUPPORTED PARAMETERS (VALUES) / FEATURES
_____________ ___ _____________ ____        ________________________________________________________________________________________
3737          270 CTCA           N          OFFLINE,UIRATE,EQID
3745          279 3705           N          (R)ADAPTER(BSCA,IBM1,TELE2,TYPE4),BASEADD,CPNAME,MODEL(A1,A2,B1,B2,B3,B4,C1,C2,C3,C4,C5,
                                             C6,D1,D2,D3,D4,D5,D6,D7,D8,E1,E2,E3,E4,E5,E6,E7,E8,F1,F2,F3,F4,F5,F6,F7,F8,G1,G2,G3,G4,
                                             G5,G6,G7,G8,H1,H2,H3,H4,H5,H6,H7,H8,J1,J2,J3,J4,K1,K2,K3,K4,L1,L2,L3,L4,1,2,3,4,5,6,7,
                                             8),OFFLINE,SETADDR(0,1,2,3,4),UIRATE,EQID
3746          279 3705           N          (R)ADAPTER(BSCA,IBM1,TELE2,TYPE4),BASEADD,CPNAME,MODEL(A1,A2,B1,B2,B3,B4,C1,C2,C3,C4,C5,
                                             C6,D1,D2,D3,D4,D5,D6,D7,D8,E1,E2,E3,E4,E5,E6,E7,E8,F1,F2,F3,F4,F5,F6,F7,F8,G1,G2,G3,G4,
                                             G5,G6,G7,G8,H1,H2,H3,H4,H5,H6,H7,H8,J1,J2,J3,J4,K1,K2,K3,K4,L1,L2,L3,L4,1,2,3,4,5,6,7,
                                             8),OFFLINE,SETADDR(0,1,2,3,4),UIRATE,EQID
3800-1        267 3800           N          AFP,CHARS,CLASS,DEST,DPMSIZE(1,2,3,4,5,6,7,8,9),FCB,FLASH,FORM,IMAGE,OFFLINE,SEP,UIRATE,
                                             MARK,LIMIT,EQID / 4WCGMS
3800-3        267 3800-3         N          AFP,CHARS,CLASS,DEST,DPMSIZE(1,2,3,4,5,6,7,8,9),FCB,FLASH,FORM,IMAGE,OFFLINE,SEP,UIRATE,
                                             MARK,LIMIT,EQID / 4WCGMS
3800-6        267 3800-6         N          AFP,CHARS,CLASS,DEST,DPMSIZE(1,2,3,4,5,6,7,8,9),FCB,FLASH,FORM,IMAGE,OFFLINE,SEP,UIRATE,
                                             MARK,LIMIT,EQID / 4WCGMS
3800-8        267 3800-8         N          AFP,OFFLINE,UIRATE,EQID / 4WCGMS
3812          287 3287           N          OFFLINE,UIRATE,EQID
3816          287 3287           N          OFFLINE,UIRATE,EQID
3820          278 3820           N          OFFLINE,UIRATE,EQID
3825          278 AFP1           N          OFFLINE,UIRATE,EQID
3827          278 AFP1           N          OFFLINE,UIRATE,EQID
3828          278 AFP1           N          OFFLINE,UIRATE,EQID
3829          278 AFP1           N          OFFLINE,UIRATE,EQID
3831          278 AFP1           N          OFFLINE,UIRATE,EQID
3835          278 AFP1           N          OFFLINE,UIRATE,EQID
3851          271 3851           N          OFFLINE,SHARED,UIRATE,EQID
3886          288 3886           N          OFFLINE,UIRATE,EQID
3890          288 3890           N          OFFLINE,UIRATE,EQID
3895          288 3895           N          OFFLINE,UIRATE,EQID
3900          278 AFP1           N          OFFLINE,UIRATE,EQID
3935          278 AFP1           N          OFFLINE,UIRATE,EQID
3995          309 3088           N          OFFLINE,UIRATE,EQID
3995-SDA      309 3088           N          OFFLINE,UIRATE,EQID
3995-151      258 3390           N          OFFLINE,SHARED,UIRATE,MDC(OFF,DFLTOFF,DFLTON),EQID
3995-153      258 3390           N          OFFLINE,SHARED,UIRATE,MDC(OFF,DFLTOFF,DFLTON),EQID
4000          278 AFP1           N          OFFLINE,UIRATE,EQID
4224          287 3287           N          OFFLINE,UIRATE,EQID
4245          268 4245           N          AFP,CHARS,CLASS,DEST,FCB,FOLD,FORM,IMAGE,OFFLINE,SEP,UIRATE,LIMIT,EQID
4248          268 4248           N          AFP,CHARS,CLASS,DEST,FCB,FOLD,FORM,IMAGE,OFFLINE,SEP,UIRATE,LIMIT,EQID
4370          278 AFP1           N          OFFLINE,UIRATE,EQID
5080          291 5080           N          OFFLINE,UIRATE,EQID
5081          291 5080           N          OFFLINE,UIRATE,EQID
5210          287 3287           N          OFFLINE,UIRATE,EQID
6090          291 5080           N          OFFLINE,UIRATE,EQID
6091          291 5080           N          OFFLINE,UIRATE,EQID
6262          268 4248           N          AFP,CHARS,CLASS,DEST,FCB,FOLD,FORM,IMAGE,OFFLINE,SEP,UIRATE,LIMIT,EQID
7171          283 3278           N          OFFLINE,UIRATE,EQID / EMUL3270,E3270HLD,OPRDR
8232          270 3088           N          OFFLINE,UIRATE,EQID
9032          307 9032           N          OFFLINE,UIRATE,EQID
9032-3        307 9032           N          OFFLINE,UIRATE,EQID
9032-5        307 9032           N          OFFLINE,UIRATE,EQID
9033          307 9033           N          OFFLINE,UIRATE,EQID
9332-40       258 9332           N          OFFLINE,SHARED,UIRATE,MDC(OFF,DFLTOFF,DFLTON),EQID
9332-42       258 9332           N          OFFLINE,SHARED,UIRATE,MDC(OFF,DFLTOFF,DFLTON),EQID
9332-60       258 9332           N          OFFLINE,SHARED,UIRATE,MDC(OFF,DFLTOFF,DFLTON),EQID
9332-62       258 9332           N          OFFLINE,SHARED,UIRATE,MDC(OFF,DFLTOFF,DFLTON),EQID
9335-B1       258 9335           N          OFFLINE,SHARED,UIRATE,MDC(OFF,DFLTOFF,DFLTON),EQID
9336-10       258 9336           N          OFFLINE,SHARED,UIRATE,MDC(OFF,DFLTOFF,DFLTON),EQID
9336-20       258 9336           N          OFFLINE,SHARED,UIRATE,MDC(OFF,DFLTOFF,DFLTON),EQID
9345          258 9345           N          OFFLINE,SHARED,UIRATE,MDC(OFF,DFLTOFF,DFLTON),EQID
9348-1        261 9348           N          OFFLINE,UIRATE,EQID / DUALDENS
```

Figure 321. Supported Hardware Report (Part 22 of 23)

```
                                        SUPPORTED HARDWARE - VM DEVICES               TIME: 10:24  DATE: 2019-03-04  PAGE X-  23
        KEY                                 KEY DESCRIPTION
        ---                                 ---------------
        TYPE-MODEL                       -  SUPPORTED DEVICE TYPE
        UIM                              -  INDEX OF UNIT INFORMATION MODULE SUPPORTING THIS DEVICE TYPE
        VM D/T                           -  VM DEVICE TYPE
        CONS                             -  DEVICE TYPE IS SUPPORTED AS VM CONSOLE
        SUPPORTED PARAMETERS (VALUES) / FEATURES  -  LIST OF SUPPORTED PARAMETERS (WITH SELECTION VALUES) AND FEATURES
        Y                                -  DEVICE TYPE HAS THE CAPABILITY
        N                                -  CAPABILITY IS NOT AVAILABLE
        (R)                              -  PARAMETER IS REQUIRED
```

Figure 322. Supported Hardware Report (Part 23 of 23)

I/O Definition Reference

```
                                I/O DEFINITION REFERENCE - DEVICES        TIME: 17:31  DATE: 2012-10-21  PAGE Y- 305

3490                TAPE      Magnetic Tape Subsystem                                                        /   1
-----------------------------------------------------------------------------------------------------------------------
UNIT=3490

                    Physical Configuration Information

                    Physical Device Types

                    Physical Device
                    3490-B20
                    3490-B40
                    Attachable to the following control units
                    3490-A10
                    3490-A20

                    Physical Device
                    (Integrated Tape Subsystem)
                    3490-C10
                    3490-C11
                    3490-C22

                    Physical Device
                    (Integrated Tape Subsystem inside a 3494)
                    3490-C1A
                    3490-C2A

                    Physical Device
                    3494 and 3495 are tape libraries containing automation,
                    library manager, one or more tape control units, storage
                    cells and tape cartridges. To prepare the IODF, no need
                    to define 3494 and 3495 explicitly. However, need to
                    indicate the tape devices as library tape devices by
                    specifying LIBRARY=YES in the device definition.

                    Logical Configuration Rules

                    For Channel Subsystem
                    - Up to maximum 4 channel paths for A10, 8 for A20,
                     2 for C1A or C2A.
                    - Range of 16 unit addresses for control unit. Also
                     accept a minimum of 2 addresses for integrated tape
                     subsystem.

                    For Operating System
                    - LIBRARY=YES, if devices are installed in a system-
                     managed IBM 3494 or IBM 3495 Tape Library.
                    - LIBRARY=YES or NO for BTLS managed library drives
                    - DYNAMIC=YES, if devices are dynamically reconfigured
                    - AUTOSWITCH=YES, if tape drives are dynamically switched
                     between system (MVS/ESA 5.2.0)

                    Configuration Example
                     CHPID PATH=(22,27),TYPE=CNC
```

Figure 323. I/O Definition Reference (Part 1 of 5)

```
                                I/O DEFINITION REFERENCE - DEVICES        TIME: 17:31  DATE: 2012-10-21  PAGE Y- 306

3490                TAPE      Magnetic Tape Subsystem                                                        /   2
-----------------------------------------------------------------------------------------------------------------------
                     CNTLUNIT CUNUMBR=0501,PATH=(22,27),UNIT=3490,         X
                          UNITADD=((00,16))
                     IODEVICE ADDRESS=(540,016),CUNUMBR=(0501),UNIT=3490,  X
                          OFFLINE=YES,DYNAMIC=YES,                         X
                          USERPRM=((LIBRARY,YES),(AUTOSWITCH,YES))

                    Software Prerequisites
                     Minimum version and release to operate the device in
                     MVS/ESA environment:

                    - MVS/SP - JES2 3.1
                    - MVS/DFP 3.1

                    Minimum Product Levels

                    - DFSORT release 11 (release 12 for C1A,C2A)
                    - EREP 3.4 (3.5 for C1A,C2A)
                    - DFHSM 2.6
                    - DFDSS 2.5

                    References

                    - MVS/ESA & MVS/XA Support for 3490 Magnetic Tape
                     Subsystem.  GC28-1141
                    - IBM 3490E Planning and Migration Guide GC35-0219
                    - IBM 3490  Planning and Migration Guide GC35-0116

                    Notes

                    - For the latest information, contact your local IBM
                     Marketing Representative.

                    -end-

Device number definition values: ADDRESS=(device number<,number-of-devices>)

    device number: 1 - 4 hexadecimal number in the range 0000 - FFFF.

    number-of-devices: Number of sequential device numbers to be assigned to the devices.
                    Minimum value:    1
                    Default value:    1
                    Maximum value: 4095


Channel Subsystem information:
------------------------------

    When attached to a parallel interface:
                    I/O interface time out function default: TIMEOUT=YES
                    Status verification facility default:    STADET=YES
```

Figure 324. I/O Definition Reference (Part 2 of 5)

```
                                I/O DEFINITION REFERENCE - DEVICES        TIME: 17:31  DATE: 2012-10-21  PAGE Y- 307

3490                TAPE      Magnetic Tape Subsystem                                                        /   3
-----------------------------------------------------------------------------------------------------------------------
    Unit address: UNITADD=xx
                    The unit address is a hexadecimal value from 00 to FF which must be specified
                    in the unit address range of the control unit.
                    Default unit address are the last 2 digits of the device number.


MVS configuration information:
------------------------------

    Generic name: 3490        It may be modified dependent on the specified features.

    Support of dynamic I/O reconfiguration:      Yes
    Support of device numbers greater than 0FFF: Yes
    Support of UCBs above 16 MB storage:         Yes

    Required parameters: None.

    Optional parameters:

    OFFLINE         Device considered online or offline at IPL
                    Default value: OFFLINE=NO

                    Specifies whether MVS is to consider the device
                    online or offline at IPL.

                    Yes      The device is considered offline at IPL.

                    No       The device is considered online at IPL.
                            (Default)

                    If MVS needs the device during IPL, specify No.

    DYNAMIC         Device supports dynamic configuration

                    Specify yes to indicate that the device is to be
                    eligible for Dynamic I/O Configuration.

    LIBRARY         Device supports auto tape library

                    Data type is YES or NO
                    Pre-selected:  No

                    Specify YES to indicate that the device belongs
                    to an automated tape library.

    AUTOSWITCH      Device is automatically switchable

                    Data type is YES or NO
                    Pre-selected:  No

                    Specify YES to indicate that the device should
```

Figure 325. I/O Definition Reference (Part 3 of 5)

```
                                I/O DEFINITION REFERENCE - DEVICES        TIME: 17:31  DATE: 2012-10-21  PAGE Y- 308

3490                TAPE      Magnetic Tape Subsystem                                                        /   4
-----------------------------------------------------------------------------------------------------------------------
                    be treated as an automatically switchable device

    Supported features:

    ALTCTRL         Separate physical control unit path

                    Specify Yes to indicate that there is a separate
                    physical control unit path to the device.

    SHARABLE        Device is Sharable between systems

                    Specify Yes to indicate that the 3803 two-channel
                    switch is used for partitioning and that magnetic
                    tape drives can be shared between two processors.

                    Do not allocate or unload a shared tape drive.

                    If specify Yes for SHARABLE, HCD forces a value of
                    Yes for the OFFLINE parameter, even if you specify
                    No for OFFLINE.

    COMPACT         Compaction

                    Specify Yes to indicate that compaction is
                    available for tape devices.

                    Compaction is a method of compressing and encoding
                    data in order to reduce storage space.
```

Figure 326. I/O Definition Reference (Part 4 of 5)

```
                            I/O DEFINITION REFERENCE - DEVICES              TIME: 17:31  DATE: 2012-10-21  PAGE Y- 403

                                                              INDEX
-----------------------------------------------------------------------------------------------------------------------

    AFP1-0 ...... Y-   1            3088 ........ Y-  95            3279-2C ..... Y- 209            3480 ........ Y- 300
    BCTC ........ Y-   3            3151 ........ Y-  97            3279-2X ..... Y- 116            3481 ........ Y- 116
    BSC1 ........ Y-   5            3160 ........ Y-  98            3279-3 ...... Y- 216            3482 ........ Y- 116
    BSC2 ........ Y-   8            3161 ........ Y- 100            3279-3A ..... Y- 217            3483 ........ Y- 116
    BSC3 ........ Y-  11            3162 ........ Y- 101            3279-3B ..... Y- 223            3490 ........ Y- 306
    ......................................................................................................................
```

Figure 327. I/O Definition Reference (Part 5 of 5)

Graphical configuration reports

This section contains one example for an LCU report. “Create or view graphical configuration reports” on page 220 describes how to produce this report.

LCU Report

The LCU report shows all logical control units for the designated processor. Each diagram shows one or more logical control units.

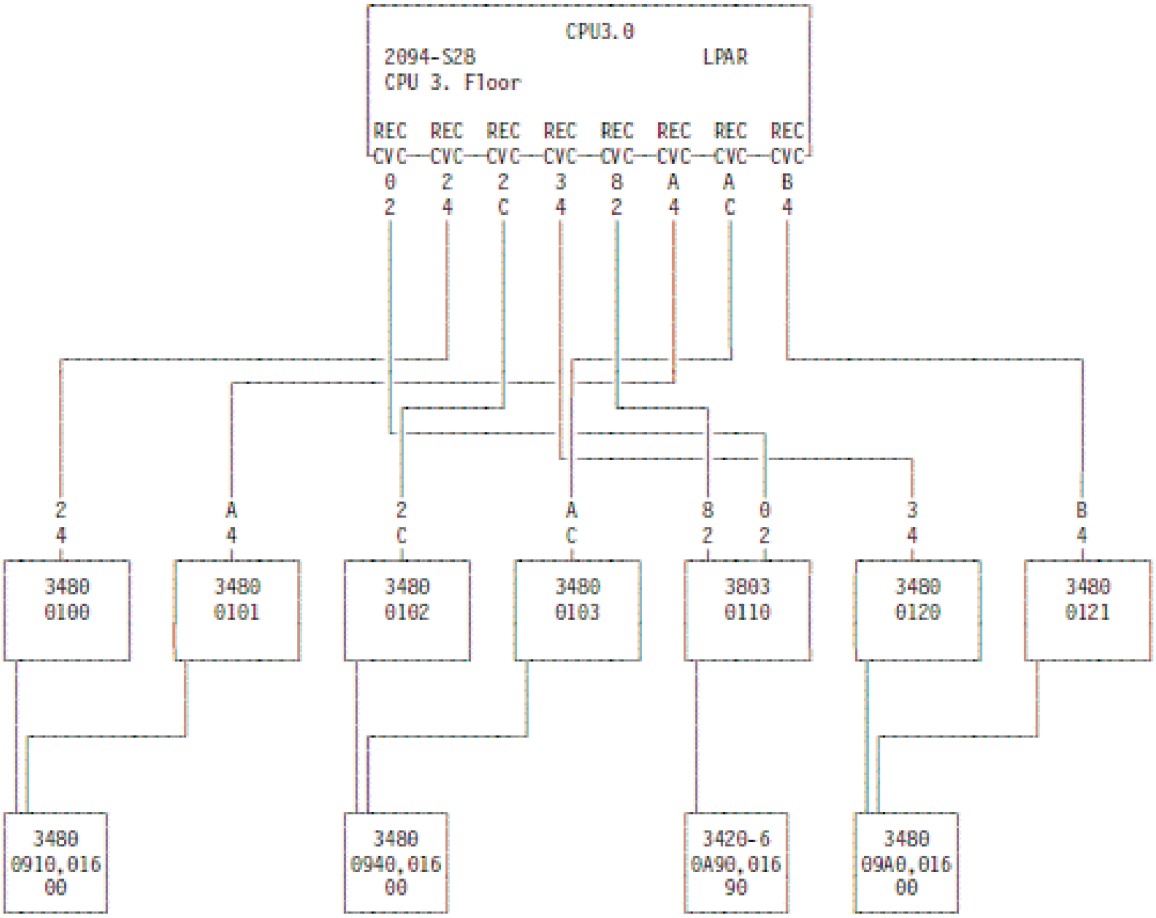

Figure 328. LCU report

IODF compare reports

The following figures show examples of IODF compare reports that can be produced by the IODF compare function of HCD. Not all possible reports are shown, and not all examples are shown completely. "HCD compare functions" on page 228 describes how to produce these reports.

For XMP processors, the processorID for the comparison is shown together with the channel subsystem in question, for example, `XMP01.1`

With all IODF reports where channel subsystems of XMP processors are involved, you can compare two channel subsystems.

Processor Compare Report

```
                                Processor Compare Report                      TIME: 10:40  DATE: 2012-10-21  PAGE A -    1

              New IODF name:  BOKA.IODF76.WORK.R111                  Old IODF name:  BOKA.IODF75.PROD.R111


|-----------------------------|---------------------|---------------------|-------------------------------------------------|
| PROC                        | New IODF            | Old IODF            | Description                                     |
|-----------------------------|---------------------|---------------------|-------------------------------------------------|
| GOLDENE1                    | Actual Data         | Old Data            |                                                 |
|                             |---------------------|---------------------|-------------------------------------------------|
|                             | with 4 CSSes prima + | with 4 CSSes        | Processor Description                           |
|                             | ry    2094-S38      |                     |   continued                                     |
|-----------------------------|---------------------|---------------------|-------------------------------------------------|
| GOLDENE2                    | Added               |                     |                                                 |
|                             |---------------------|---------------------|-------------------------------------------------|
|                             | LPAR                |                     | Processor Configuration Mode                    |
|                             | 2094-S28            |                     | Processor Type                                  |
|                             |                     |                     | Processor Serial Number                         |
|                             |                     |                     | Processor Network Name of SNA Address           |
|                             |                     |                     | Processor CPC Name of SNA Address               |
|                             | with 4 CSSes secon + |                     | Processor Description                           |
|                             | dary  2094-S28      |                     |   continued                                     |
|                             | 80800002795A209409 + | 80800002795A209409 + | Processor Token                                 |
|                             | -11-2314:37:54      | -11-1316:53:04      |   continued                                     |
|                             | ERV01               |                     |   Processor Local System Name                   |
|-----------------------------|---------------------|---------------------|-------------------------------------------------|
```

Figure 329. Processor Compare Report

Channel Subsystem Compare Report

```
1                                   Channel Subsystem Compare Report               TIME: 13:03  DATE: 2014-06-23  PAGE A -    2

                 New IODF name:  BVTH.IODFA1.DOCU.Z22.WORK              Old IODF name:  BVTH.IODFA0.DOCU.Z22.WORK


                                Limited to New Processor Id:  P2964     Old Processor Id:  P2964


  |-----------------------------|---------------------|---------------------|-------------------------------------------------|
  | P2964      4                | Actual Data         | Old Data            |                                                 |
  |                             |---------------------|---------------------|-------------------------------------------------|
  |                             | CSS 4 of P2964      | same                | Channel Subsystem Description                   |
  |                             | 65280               | same                | Maximum Numbers of Devices in Subchannel Set 0  |
  |                             | 65535               | same                | Maximum Numbers of Devices in Subchannel Set 1  |
  |                             | 65535               | same                | Maximum Numbers of Devices in Subchannel Set 2  |
  |                             | 65535               | same                | Maximum Numbers of Devices in Subchannel Set 3  |
  |-----------------------------|---------------------|---------------------|-------------------------------------------------|
  | P2964      5                | Actual Data         | Old Data            |                                                 |
  |                             |---------------------|---------------------|-------------------------------------------------|
  |                             | modify CSS 5 SS1    |                     | Channel Subsystem Description                   |
  |                             | 65280               | same                | Maximum Numbers of Devices in Subchannel Set 0  |
  |                             | 65000               | 65535               | Maximum Numbers of Devices in Subchannel Set 1  |
  |                             | 65535               | same                | Maximum Numbers of Devices in Subchannel Set 2  |
  |                             | 65535               | same                | Maximum Numbers of Devices in Subchannel Set 3  |
  |-----------------------------|---------------------|---------------------|-------------------------------------------------|
```

Figure 330. Channel Subsystem Compare Report

PCIe Function Compare Report

The ***PCIe Function Compare Report*** shows the changes in the IDs and attributes of PCIe functions between processors of two IODFs.

```
                                    PCIe Function Compare Report                    TIME: 10:49  DATE: 2016-10-18  PAGE A -    8

               New IODF name:  THI.IODFA0.z14.SIO.WORK            Old IODF name:  THI.IODFA0.z14.SIO.WORK2

                              Limited to New Processor Id:  P3906V2   Old Processor Id:  P3906

|-----------------------------|----------------------|----------------------|-------------------------------------------------
| PROC       FID              | New IODF             | Old IODF             | Description

|-----------------------------|----------------------|----------------------|-------------------------------------------------
| P3906V2    0017             | Added                |                      |
|                             |----------------------|----------------------|-------------------------------------------------
|                             | 115                  |                      | Channel ID (CHID)
|                             | 2                    |                      | Adapter port
|                             | ZHYPERLINK           |                      | Function Type
|                             | 127                  |                      | Virtual Function ID (VF)
|                             | undefined            |                      | UID parameter
|                             | new type port2       |                      | Function Description
|                             |----------------------|----------------------|-------------------------------------------------
|                             |  >> LP02             |                      | Partition in Access List
|                             |----------------------|----------------------|-------------------------------------------------
|                             |  >> CF0F             |                      | Partition in Candidate List
|                             |  >> CF51             |                      | Partition in Candidate List
|                             |  >> CF52             |                      | Partition in Candidate List
|                             |  >> CO5A             |                      | Partition in Candidate List
|                             |  >> CO59             |                      | Partition in Candidate List
|-----------------------------|----------------------|----------------------|-------------------------------------------------
| P3906V2    0018             | Added                |                      |
|                             |----------------------|----------------------|-------------------------------------------------
|                             | 115                  |                      | Channel ID (CHID)
|                             | 1                    |                      | Adapter port
|                             | ZHYPERLINK           |                      | Function Type
|                             |   1                  |                      | Virtual Function ID (VF)
|                             | 00A4                 |                      | UID parameter
|                             |                      |                      | Function Description
|                             |----------------------|----------------------|-------------------------------------------------
|                             |  >> CO5A             |                      | Partition in Access List
```

Figure 331. PCIe Function Compare Report

Partition Compare Report

```
                                    Partition Compare Report                        TIME: 10:22  DATE: 2016-04-27  PAGE B -    2

               New IODF name:  BVTH.IODFA0.DOCU.Z22.UID1.WORK         Old IODF name:  BVTH.IODFA0.DOCU.Z22.UID.WORK

                              Limited to New Processor Id:  P2964V3   Old Processor Id:  P2964V3

|-----------------------------|----------------------|----------------------|-------------------------------------------------|
| PROC       PART             | New IODF             | Old IODF             | Description                                     |
|-----------------------------|----------------------|----------------------|-------------------------------------------------|
| P2964V3.0  LP01             | Actual Data          | Old Data             |                                                 |
|                             |----------------------|----------------------|-------------------------------------------------|
|                             | 1                    | same                 | Partition Number                                |
|                             | OS                   | same                 | Partition Usage                                 |
|                             | N                    | Y                    | Partition UID flag                              |
|                             | Test partition 01    | same                 | Partition Description                           |
|-----------------------------|----------------------|----------------------|-------------------------------------------------|
```

Figure 332. Partition Compare Report

Channel path compare report

```
              New IODF name:  BVTH.IODFA0.DOCU.Z22.CL5.WORK         Old IODF name:  BVTH.IODFA0.DOCU.Z22.CL5.WORK1

                            Limited to New Processor Id:  P2964V5   Old Processor Id:  P2964V5

|-----------------------------|----------------------|----------------------|---------------------------------------------|
| PROC       CHPID            | New IODF             | Old IODF             | Description                                 |
|-----------------------------|----------------------|----------------------|---------------------------------------------|
| P2964V5.0  14               | Added                |                      |                                             |
|                             |----------------------|----------------------|---------------------------------------------|
|                             | 011                  |                      | Channel ID (CHID)                           |
|                             | CL5                  |                      | Channel Path Type                           |
|                             | SPAN                 |                      | Channel Path Operation Mode                 |
|                             |                      |                      | Channel Path Description                    |
|                             | undefined            |                      | Connects to Dynamic Switch                  |
|                             | not occupied         |                      | Channel Path Occupied Flag                  |
|                             | not managed          |                      | Channel Path Managed Indicator              |
|                             | none                 |                      | Channel Path I/O Cluster Name               |
|                             | 2                    |                      | Port                                        |
|                             |----------------------|----------------------|---------------------------------------------|
|                             |  >> LP0B             |                      | Partition in Candidate List                 |
|-----------------------------|----------------------|----------------------|---------------------------------------------|
| P2964V5.0  22               | Actual Data          | Old Data             |                                             |
|                             |----------------------|----------------------|---------------------------------------------|
|                             | 33                   | 30                   | HCA Adapter ID                              |
|                             |----------------------|----------------------|---------------------------------------------|
|                             |  >> LP01             |  >> new added        | Partition in Candidate List                 |
|                             |  >> LP03             |  >> new added        | Partition in Candidate List                 |
|-----------------------------|----------------------|----------------------|---------------------------------------------|

……..

|-----------------------------|----------------------|----------------------|---------------------------------------------|
| PROC       CHPID            | New IODF             | Old IODF             | Description                                 |
|-----------------------------|----------------------|----------------------|---------------------------------------------|
| P2964V5.5  13               | Actual Data          | Old Data             |                                             |
|                             |----------------------|----------------------|---------------------------------------------|
|                             |  >> 0FF23,32         |  >> same             | Attached Device, Range                      |
|                             |  >> 0FF43,32         |  >> same             | Attached Device, Range                      |
|                             |  >> 0FF83,32         |  >> same             | Attached Device, Range                      |
|-----------------------------|----------------------|----------------------|---------------------------------------------|
| P2964V5.5  14               | Added                |                      |                                             |
|                             |----------------------|----------------------|---------------------------------------------|
|                             | 011                  |                      | Channel ID (CHID)                           |
|                             | CL5                  |                      | Channel Path Type                           |
|                             | SPAN                 |                      | Channel Path Operation Mode                 |
|                             |                      |                      | Channel Path Description                    |
|                             | undefined            |                      | Connects to Dynamic Switch                  |
|                             | not occupied         |                      | Channel Path Occupied Flag                  |
|                             | not managed          |                      | Channel Path Managed Indicator              |
|                             | none                 |                      | Channel Path I/O Cluster Name               |
|                             | 2                    |                      | Port                                        |
|                             |----------------------|----------------------|---------------------------------------------|
|                             |  >> LP51             |                      | Partition in Access List                    |
|-----------------------------|----------------------|----------------------|---------------------------------------------|
| P2964V5.5  22               | Actual Data          | Old Data             |                                             |
|                             |----------------------|----------------------|---------------------------------------------|
|                             | 33                   | 30                   | HCA Adapter ID                              |
|-----------------------------|----------------------|----------------------|---------------------------------------------|
| P2964V5.5  55               | Added                |                      |                                             |
|                             |----------------------|----------------------|---------------------------------------------|
|                             | 7C1                  |                      | Channel ID (CHID)                           |
|                             | IQD                  |                      | Channel Path Type                           |
|                             | DED                  |                      | Channel Path Operation Mode                 |
|                             |                      |                      | Channel Path Description                    |
|                             | undefined            |                      | Connects to Dynamic Switch                  |
|                             | not managed          |                      | Channel Path Managed Indicator              |
|                             | none                 |                      | Channel Path I/O Cluster Name               |
|                             | 16                   |                      | MTU size (in KB)                            |
|                             |                      |                      | IQD Function                                |
|                             | XXXX                 |                      | Physical Network ID 1                       |
|                             |----------------------|----------------------|---------------------------------------------|
|                             |  >> LP51             |                      | Partition in Access List                    |
|-----------------------------|----------------------|----------------------|---------------------------------------------|
```

Figure 333. Channel Path Compare Report

Note: HCD allows devices to define identical device number and subchannelset information. Such devices can not be resolved as different devices within the Channel Path Compare Report and are marked with an asterisk ('*'). If further information on these devices is necessary, refer to the according device reports.

Control Unit Attachment Compare Report

```
                                Control Unit Attachment Compare Report         TIME: 14:21  DATE: 2012-10-21  PAGE D -    4

                 New IODF name:  BOKA.IODF38                           Old IODF name:  BOKA.IODF38.TEMP


                              Limited to New Processor Id:  FR38LPAR  Old Processor Id:  FR38LPAR


  |-----------------------------|---------------------|---------------------|-------------------------------------------------|
  | PROC       CU               | New IODF            | Old IODF            | Description                                     |
  |-----------------------------|---------------------|---------------------|-------------------------------------------------|
  | FR38LPAR   2000             | Actual Data         | Old Data            |                                                 |
  |                             |---------------------|---------------------|-------------------------------------------------|
  |                             | serial              | same                | Control Unit Attachment Type                    |
  |                             | S          *        | same                | Protocol                                        |
  |                             | 2          *        | same                | I/O Concurrency Level                           |
  |                             | 1                   | same                | Control Unit Address                            |
  |                             |---------------------|---------------------|-------------------------------------------------|
  |                             | 00,256              | same                | Unit Address, Number of addresses               |
  |                             |---------------------|---------------------|-------------------------------------------------|
  |                             |  >> 07.9B           |  >> same            | Connected Channel Path, Destination Link Address |
  |                             |  >> 0C.70           |  >> same            | Connected Channel Path, Destination Link Address |
  |                             |  >> 6B.9E           |  >> same            | Connected Channel Path, Destination Link Address |
  |                             | 5                   | same                | Number of Connected Managed Channel Paths       |
  |-----------------------------|---------------------|---------------------|-------------------------------------------------|
  | FR38LPAR   2200             | Actual Data         | Old Data            |                                                 |
  |                             |---------------------|---------------------|-------------------------------------------------|
  |                             | serial              | same                | Control Unit Attachment Type                    |
  |                             | S          *        | same                | Protocol                                        |
  |                             | 2          *        | same                | I/O Concurrency Level                           |
  |                             | 3                   | same                | Control Unit Address                            |
  |                             |---------------------|---------------------|-------------------------------------------------|
  |                             | 00,256              | same                | Unit Address, Number of addresses               |
  |                             |---------------------|---------------------|-------------------------------------------------|
  |                             |  >> 0B.B9           |  >> same            | Connected Channel Path, Destination Link Address |
  |                             |  >> 17.9B           |  >> same            | Connected Channel Path, Destination Link Address |
  |                             |  >> 6B.9A           |  >> same            | Connected Channel Path, Destination Link Address |
  |                             | 5                   | same                | Number of Connected Managed Channel Paths       |
  |-----------------------------|---------------------|---------------------|-------------------------------------------------|
```

Figure 334. Control Unit Attachment Compare Report

Device Attachment Compare Report

```
                                Device Attachment Compare Report               TIME: 12:16  DATE: 2012-10-21  PAGE E -   11

                 New IODF name:  BOKA.IODF75.WORK.R17                  Old IODF name:  BOKA.IODF77.WORK.R17


                              Limited to New Processor Id:  GOLDENE1  Old Processor Id:  GOLDENE1
                              Limited to New CSS Id:        0         Old CSS Id:        0


  |-----------------------------|---------------------|---------------------|-------------------------------------------------|
  | PROC       Device, Range    | New IODF            | Old IODF            | Description                                     |
  |-----------------------------|---------------------|---------------------|-------------------------------------------------|
  | GOLDENE1.0 0000,8           | Actual Data         | Old Data            |                                                 |
  |                             |---------------------|---------------------|-------------------------------------------------|
  |                             | 0                   | 1                   | Subchannel Set ID                               |
  |                             | 00                  | same                | Unit Address                                    |
  |                             | Yes                 | same                | Illegal Status Detection Facility               |
  |                             | No                  | same                | Timeout Facility                                |
  |                             | undefined           | same                | Preferred Channel Path                          |
  |                             |---------------------|---------------------|-------------------------------------------------|
  |                             |  >> GECSS0FX        |  >> same            | Partition in Explicit Device Candidate list     |
  |                             |  >> GECSS01X        |  >> same            | Partition in Explicit Device Candidate list     |
  |                             |  >> GECSS03X        |  >> same            | Partition in Explicit Device Candidate list     |
  |-----------------------------|---------------------|---------------------|-------------------------------------------------|
  | GOLDENE1.0 0008,8           | Actual Data         | Old Data            |                                                 |
  |                             |---------------------|---------------------|-------------------------------------------------|
  |                             | 0                   | same                | Subchannel Set ID                               |
  |                             | 08                  | same                | Unit Address                                    |
  |                             | Yes                 | same                | Illegal Status Detection Facility               |
  |                             | No                  | same                | Timeout Facility                                |
  |                             | undefined           | same                | Preferred Channel Path                          |
  |-----------------------------|---------------------|---------------------|-------------------------------------------------|
```

Figure 335. Device Attachment Compare Report

Control Unit Compare Report

```
                                    Control Unit Compare Report                    TIME: 08:41  DATE: 2012-10-21  PAGE F -    1

                 New IODF name:  REDDE.IODF00.COMP1                    Old IODF name:  REDDE.IODF00.COMP2

                                Limited to New Processor Id:  LPARPROC  Old Processor Id:  LPARPROC
                                Limited to New Partition Id:  PART1     Old Partition Id:  PART3

   |---------------------------|---------------------|---------------------|-----------------------------------------------------|
   | CU                        | New IODF            | Old IODF            | Description                                         |
   |---------------------------|---------------------|---------------------|-----------------------------------------------------|
   | 0200                      | Actual Data         | Old Data            |                                                     |
   |                           |---------------------|---------------------|-----------------------------------------------------|
   |                           | 3990                | same                | Control Unit Type                                   |
   |                           |                     | same                | Control Unit Serial Number                          |
   |                           |                     | same                | Control Unit Description                            |
   |                           |---------------------|---------------------|-----------------------------------------------------|
   |                           |  >> BASPROC         |  >> new added       | Attached to Processor                               |
   |                           |  >> LPARPROC        |  >> same            | Attached to Processor                               |
   |                           |  >> P2084.1         |  >> same            | Attached to Processor                               |
   |                           |---------------------|---------------------|-----------------------------------------------------|
   |                           |  >> 01 E4           |  >> same            | Connected to Switch, Port                           |
   |                           |  >> 01 E5           |  >> same            | Connected to Switch, Port                           |
   |                           |---------------------|---------------------|-----------------------------------------------------|
   |                           |  >> access list     |  >> candidate list  | Relation to Limiting LPAR                           |
   |---------------------------|---------------------|---------------------|-----------------------------------------------------|
```

Figure 336. Control Unit Compare Report

Note: With z/OS V2R3, HCD no longer displays attached device information in the control unit compare report. This information has been removed to reduce the report size and make it more readable.

The information of device to control unit connection can still be found within the device configuration report. In order to get a quick overview of which devices are connected to a specific control unit, it is possible to use the filter function of the ISPF dialog: "Invoke option 1.5 (I/O device list), enter command 'fi' or select the filter option 'Set Filter' and specify the desired control unit."

Device Compare Report

```
                                    Device Compare Report                          TIME: 08:41  DATE: 2012-10-21  PAGE G -    1

                 New IODF name:  REDDE.IODF00.COMP1                    Old IODF name:  REDDE.IODF00.COMP2

                                Limited to New Processor Id:  LPARPROC  Old Processor Id:  LPARPROC
                                Limited to New Partition Id:  PART1     Old Partition Id:  PART3

   |---------------------------|---------------------|---------------------|-----------------------------------------------------|
   | Device, Range             | New IODF            | Old IODF            | Description                                         |
   |---------------------------|---------------------|---------------------|-----------------------------------------------------|
   | 0100                      | Actual Data         | Old Data            |                                                     |
   |                           |---------------------|---------------------|-----------------------------------------------------|
   |                           | 9032                | same                | Device Type                                         |
   |                           |                     | same                | Serial Number                                       |
   |                           |                     | same                | Device Description                                  |
   |                           |                     | same                | VOLSER                                              |
   |                           |---------------------|---------------------|-----------------------------------------------------|
   |                           |  >> BASPROC         |  >> new added       | Attached to Processor                               |
   |                           |  >> old deleted     |  >> BASPROC1        | Attached to Processor                               |
   |                           |  >> LPARPROC        |  >> same            | Attached to Processor                               |
   |                           |  >> P2084.1         |  >> same            | Attached to Processor                               |
   |                           |---------------------|---------------------|-----------------------------------------------------|
   |                           |  >> 0100            |  >> same            | Connected to Control Unit                           |
   |                           |---------------------|---------------------|-----------------------------------------------------|
   |                           |  >> access list     |  >> candidate list  | Relation to Limiting LPAR                           |
   |---------------------------|---------------------|---------------------|-----------------------------------------------------|
   | 0200,15                   | Actual Data         | Old Data            |                                                     |
   |                           |---------------------|---------------------|-----------------------------------------------------|
   |                           | 3390                | same                | Device Type                                         |
   |                           |                     | same                | Serial Number                                       |
   |                           | PROD4 AB - duplexed | PROD4 AB            | Device Description                                  |
   |                           |                     | same                | VOLSERn                                             |
   |                           | D                   |                     | PPRC Usage                                          |
   |                           |---------------------|---------------------|-----------------------------------------------------|
   |                           |  >> BASPROC         |  >> new added       | Attached to Processor                               |
   |                           |  >> LPARPROC        |  >> same            | Attached to Processor                               |
   |                           |---------------------|---------------------|-----------------------------------------------------|
   |                           |  >> 0200            |  >> same            | Connected to Control Unit                           |
   |                           |  >> 0210            |  >> same            | Connected to Control Unit                           |
   |                           |---------------------|---------------------|-----------------------------------------------------|
   |                           |  >> OSOSOSOS        |  >> same            | Attached to Operating System Configuration          |
   |                           |---------------------|---------------------|-----------------------------------------------------|
   |                           |  >> access list     |  >> candidate list  | Relation to Limiting LPAR                           |
   |---------------------------|---------------------|---------------------|-----------------------------------------------------|
```

Figure 337. Device Compare Report

Switch Compare Report

```
                                    Switch Compare Report                        TIME: 13:52  DATE: 2012-10-21  PAGE H -    1

                New IODF name:  HCI.IODF00                             Old IODF name:  HCI.IODF01


|---------------------------|---------------------|---------------------|-------------------------------------------------|
| SWITCH                    | New IODF            | Old IODF            | Description                                     |
|---------------------------|---------------------|---------------------|-------------------------------------------------|
| 01                        | Actual Data         | Old Data            |                                                 |
|                           |---------------------|---------------------|-------------------------------------------------|
|                           | 9032                | same                | Switch Type                                     |
|                           |                     | same                | Switch Serial Number                            |
|                           |                     | same                | Description                                     |
|                           |---------------------|---------------------|-------------------------------------------------|
|                           | >> 1000    1000     | >> same             | Switch Control unit, switch device              |
|                           | >> 1010    1010     | >> same             | Switch Control unit, switch device              |
|                           | >> 1020    1020     | >> same             | Switch Control unit, switch device              |
|---------------------------|---------------------|---------------------|-------------------------------------------------|
| 02                        | Actual Data         | Old Data            |                                                 |
|                           |---------------------|---------------------|-------------------------------------------------|
|                           | 9032                | same                | Switch Type                                     |
|                           |                     | same                | Switch Serial Number                            |
|                           |                     | same                | Description                                     |
|                           |---------------------|---------------------|-------------------------------------------------|
|                           | >> 2222    2222     | >> same             | Switch Control unit, switch device              |
|                           | >> 3333    3333     | >> 4444 4444        | Switch Control unit, switch device              |
|                           | >> 4444    4444     | >> new added        | Switch Control unit, switch device              |
|---------------------------|---------------------|---------------------|-------------------------------------------------|
```

Figure 338. Switch Compare Report

Switch Detail Compare Report

```
                                    Switch Detail Compare Report                 TIME: 13:52  DATE: 2012-10-21  PAGE I -    9

                New IODF name:  HCI.IODF00                             Old IODF name:  HCI.IODF01


                                   Limited to New Switch Id:  01      Old Switch Id:  01


|---------------------------|---------------------|---------------------|-------------------------------------------------|
| SWITCH   PORT             | New IODF            | Old IODF            | Description                                     |
|---------------------------|---------------------|---------------------|-------------------------------------------------|
| 01       B0               | Actual Data         | Old Data            |                                                 |
|                           |---------------------|---------------------|-------------------------------------------------|
|                           | installed           | same                | Port Installed Flag                             |
|                           |                     |                     | Port Name                                       |
|                           |---------------------|---------------------|-------------------------------------------------|
|                           |  >> 0800            |  >> same            | Attached to Control Unit                        |
|                           |  >> P2084.1  31     |  >> same            | Attached to Processor, Channel Path             |
|---------------------------|---------------------|---------------------|-------------------------------------------------|
| 01       B1               | Actual Data         | Old Data            |                                                 |
|                           |---------------------|---------------------|-------------------------------------------------|
|                           | installed           | same                | Port Installed Flag                             |
|                           | CU_400              | CU_500              | Port Name                                       |
|                           |---------------------|---------------------|-------------------------------------------------|
|                           |  >> 0800            |  >> 0500            | Attached to Control Unit                        |
|---------------------------|---------------------|---------------------|-------------------------------------------------|
| 01       B2               | Actual Data         | Old Data            |                                                 |
|                           |---------------------|---------------------|-------------------------------------------------|
|                           | installed           | same                | Port Installed Flag                             |
|                           | PROCA_CP18          |                     | Port Name                                       |
|                           | occupied            | not occupied        | Port Occupied Flag                              |
|---------------------------|---------------------|---------------------|-------------------------------------------------|
```

Figure 339. Switch Detail Compare Report

Switch Configuration Compare Report

The Switch Configuration Compare Report compares the switch configurations contained in the specified IODFs.

```
                                    Switch Configuration Compare Report          TIME: 13:52  DATE: 2012-10-21  PAGE J -    1

                New IODF name:  HCI.IODF00                             Old IODF name:  HCI.IODF01


|-----------------------------|---------------------|---------------------|-------------------------------------------------|
| SWITCH     SWCONFIG         | New IODF            | Old IODF            | Description                                     |
|-----------------------------|---------------------|---------------------|-------------------------------------------------|
| 01         BASIC            | Actual Data         | Old Data            |                                                 |
|                             |---------------------|---------------------|-------------------------------------------------|
|                             | PROHIBIT            | ALLOW               | Default Connection Type                         |
|                             | SW Building 01-125  | same                | Switch Configuration Description                |
|-----------------------------|---------------------|---------------------|-------------------------------------------------|
```

Figure 340. Switch Configuration Compare Report

Switch Configuration Detail Compare Report

```
                                   Switch Configuration Detail Compare Report      TIME: 13:52  DATE: 2012-10-21  PAGE K -    1

               New IODF name:  HCI.IODF00                              Old IODF name:  HCI.IODF01

|----------------------------|----------------------|----------------------|-----------------------------------------------------|
| SWITCH   SWCONFIG PORT     | New IODF             | Old IODF             | Description                                         |
|----------------------------|----------------------|----------------------|-----------------------------------------------------|
| 01       BASIC    E1        | Actual Data          | Old Data             |                                                     |
|                            |----------------------|----------------------|-----------------------------------------------------|
|                            | Unblocked            | same                 | Blocked / Unblocked Connection                      |
|                            |----------------------|----------------------|-----------------------------------------------------|
|                            |  >> F1               |  >> same             | Port of Dedicated Connection                        |
|----------------------------|----------------------|----------------------|-----------------------------------------------------|
| 01       BASIC    E2        | Actual Data          | Old Data             |                                                     |
|                            |----------------------|----------------------|-----------------------------------------------------|
|                            | Unblocked            | same                 | Blocked / Unblocked Connection                      |
|                            |----------------------|----------------------|-----------------------------------------------------|
|                            |  >> E7               |  >> same             | Port of Allowed Connection                          |
|                            |  >> F3               |  >> same             | Port of Allowed Connection                          |
|                            |----------------------|----------------------|-----------------------------------------------------|
|                            |  >> E8               |  >> same             | Port of Prohibited Connection                       |
|----------------------------|----------------------|----------------------|-----------------------------------------------------|
| 01       BASIC    E3        | Actual Data          | Old Data             |                                                     |
|                            |----------------------|----------------------|-----------------------------------------------------|
|                            | Unblocked            | same                 | Blocked / Unblocked Connection                      |
|                            |----------------------|----------------------|-----------------------------------------------------|
|                            |  >> E8               |  >> same             | Port of Prohibited Connection                       |
|                            |  >> E9               |  >> same             | Port of Prohibited Connection                       |
|----------------------------|----------------------|----------------------|-----------------------------------------------------|
```

Figure 341. Switch Configuration Detail Compare Report

Esoteric Compare Report

```
                                   Esoteric Compare Report                        TIME: 08:32  DATE: 2012-10-21  PAGE P -    1

               New IODF name:  REDDE.IODF00.COMP1                      Old IODF name:  REDDE.IODF00.COMP2

                            Limited to New Operating System Id: OS1       Old Operating System Id:  OS1

|----------------------------|----------------------|----------------------|-----------------------------------------------------|
| OSCONFIG EDT      ESOTERIC | New IODF             | Old IODF             | Description                                         |
|----------------------------|----------------------|----------------------|-----------------------------------------------------|
| OS1      01       BOBO     |                      | Deleted              |                                                     |
|                            |----------------------|----------------------|-----------------------------------------------------|
|                            |                      | No                   | Esoteric is VIO Eligible                            |
|                            |                      |                      | Esoteric Token                                      |
|                            |                      |----------------------|-----------------------------------------------------|
|                            |                      |  >> 0201,3           | Assigned Device, Range                              |
|                            |                      |  >> 0205,3           | Assigned Device, Range                              |
|----------------------------|----------------------|----------------------|-----------------------------------------------------|
| OS1      01       HUGO     | Added                |                      |                                                     |
|                            |----------------------|----------------------|-----------------------------------------------------|
|                            | No                   |                      | Esoteric is VIO Eligible                            |
|                            |                      |                      | Esoteric Token                                      |
|                            |----------------------|                      |-----------------------------------------------------|
|                            |  >> 0200,8           |                      | Assigned Device, Range                              |
|                            |  >> 0300,64          |                      | Assigned Device, Range                              |
|----------------------------|----------------------|----------------------|-----------------------------------------------------|
| OS1      01       SYSDA    | Actual Data          | Old Data             |                                                     |
|                            |----------------------|----------------------|-----------------------------------------------------|
|                            | Yes                  | same                 | Esoteric is VIO Eligible                            |
|                            |                      | same                 | Esoteric Token                                      |
|                            |----------------------|----------------------|-----------------------------------------------------|
|                            |  >> old deleted      |  >> 0204             | Assigned Device, Range                              |
|                            |  >> 0300,64          |  >> same             | Assigned Device, Range                              |
|----------------------------|----------------------|----------------------|-----------------------------------------------------|
```

Figure 342. Esoteric Compare Report

Operating System Compare Report

```
                                    Operating System Compare Report

                New IODF name:  BVTH.IODF01.PPRC                      Old IODF name:  BVTH.IODF01


|-----------------------------|----------------------|----------------------|-------------------------------------------------|
| OSCONFIG                    | New IODF             | Old IODF             | Description                                     |
|-----------------------------|----------------------|----------------------|-------------------------------------------------|
| CDRZOS2                     | Actual Data          | Old Data             |                                                 |
|                             |----------------------|----------------------|-------------------------------------------------|
|                             | MVS                  | same                 | Operating System Type                           |
|                             | copied D/R configu + | same                 | Operating System Description                    |
|                             | ration DRZOS2        |                      |   continued                                     |
|                             |                      | same                 | D/R Site Operating System ID                    |
|                             |                      | same                 | Generated Operating System                      |
|-----------------------------|----------------------|----------------------|-------------------------------------------------|
| DRZOS1                      | Added                |                      |                                                 |
|                             |----------------------|----------------------|-------------------------------------------------|
|                             | MVS                  |                      | Operating System Type                           |
|                             | generated from ZOS + |                      | Operating System Description                    |
|                             | 1                    |                      |   continued                                     |
|                             |                      |                      | D/R Site Operating System ID                    |
|                             | Yes                  |                      | Generated Operating System                      |
|-----------------------------|----------------------|----------------------|-------------------------------------------------|
| DRZOS2                      | Actual Data          | Old Data             |                                                 |
|                             |----------------------|----------------------|-------------------------------------------------|
|                             | MVS                  | same                 | Operating System Type                           |
|                             | generated from ZOS + | same                 | Operating System Description                    |
|                             | 2                    |                      |   continued                                     |
|                             |                      | same                 | D/R Site Operating System ID                    |
|                             | Yes                  |                      | Generated Operating System                      |
|-----------------------------|----------------------|----------------------|-------------------------------------------------|
```

Figure 343. Operating System Compare Report

OS Device Compare Report

```
                                    OS Device Compare Report                      TIME: 08:32  DATE: 2012-10-21  PAGE R -    1

                New IODF name:  REDDE.IODF00.COMP1                    Old IODF name:  REDDE.IODF00.COMP2

                              Limited to New Operating System Id: OS1       Old Operating System Id:  OS1


|---------------------------|----------------------|----------------------|-------------------------------------------------|
| OS       Device, Range    | New IODF             | Old IODF             | Description                                     |
|---------------------------|----------------------|----------------------|-------------------------------------------------|
| OS1      0100             | Actual Data          | Old Data             |                                                 |
|                           |----------------------|----------------------|-------------------------------------------------|
|                           | 9033                 | same                 | Device Type                                     |
|                           | SWCH                 | same                 | Name of Generic                                 |
|                           | Yes                  | same                 | Value(s) of Parameter OFFLINE                   |
|                           | Yes                  | same                 | Value(s) of Parameter DYNAMIC                   |
|---------------------------|----------------------|----------------------|-------------------------------------------------|
| OS1      0200,32          | Actual Data          | Old Data             |                                                 |
|                           |----------------------|----------------------|-------------------------------------------------|
|                           | 3390                 | same                 | Device Type                                     |
|                           | 3390                 | same                 | Name of Generic                                 |
|                           | No          *        | same                 | Value(s) of Parameter OFFLINE                   |
|                           | Yes                  | same                 | Value(s) of Parameter DYNAMIC                   |
|---------------------------|----------------------|----------------------|-------------------------------------------------|
| OS1      01D1,4           | Actual Data          | Old Data             |                                                 |
|                           |----------------------|----------------------|-------------------------------------------------|
|                           | 3390A                | same                 | Device Type                                     |
|                           | 3390                 | same                 | Name of Generic                                 |
|                           | 0                    | 1                    | Subchannel Set ID                               |
|                           | No                   | same                 | Value(s) of Parameter OFFLINE                   |
|                           | Yes                  | same                 | Value(s) of Parameter DYNAMIC                   |
|                           | ...                  | ...                  | ...                                             |
|                           | SHARED               | same                 | Feature                                         |
|                           | ...                  | ...                  | ...                                             |
|---------------------------|----------------------|----------------------|-------------------------------------------------|

 * indicates this value as default value (only shown when both sides exist)
```

Figure 344. OS Device Compare Report

Note: Device ranges in a subchannel set with a subchannel set ID > 0 are displayed in a 5-digit notation with the leading digit indicating the subchannel set ID. For example, a device range 1000,64 located in subchannel set 1 is shown as `11000,64`. A device range 2000,32 in subchannel set 0 is shown as `2000,32`.

OS Console Compare Report

```
                                    OS Console Compare Report                      TIME: 12:41  DATE: 2012-10-21  PAGE Q -    1

               New IODF name:  USER.IODF03.WORK                      Old IODF name:  HCD.IODF01.WORK

                             Limited to New Operating System Id: OPSYS01   Old Operating System Id:  OPSYS01

 |---------------------------|----------------------|----------------------|-------------------------------------------------|
 | OSCONFIG DEVICE           | New IODF             | Old IODF             | Description                                     |
 |---------------------------|----------------------|----------------------|-------------------------------------------------|
 | OPSYS01  0001             | Actual Data          | Old Data             |                                                 |
 |                           |----------------------|----------------------|-------------------------------------------------|
 |                           | 2                    | 1                    | Order Number                                    |
 |---------------------------|----------------------|----------------------|-------------------------------------------------|
 | OPSYS01  0002             | Added                |                      |                                                 |
 |                           |----------------------|----------------------|-------------------------------------------------|
 |                           | 1                    |                      | Order Number                                    |
 |---------------------------|----------------------|----------------------|-------------------------------------------------|
```

Figure 345. OS Console Compare Report

CSS / OS Device Compare Report

```
                                    CSS / OS Device Compare                        TIME: 17:00  DATE: 2012-10-21  PAGE S -    1

                          IODF Name : SEL.IODF00.WORK1
                 Processor Id: PROC01    Css Id: 0   Partition Name: PART00    ./.   Operating System Configuration Id: MVS1

 |----------------------------|----------------------|----------------------|
 | Device, Range              | CSS Device Type      | OS Device Type       |
 |----------------------------|----------------------|----------------------|
 |  A000,80           *       | 3390B                | same                 |
 |  A050,176          -       | 3390A                | same                 |
 |  A200,80           -       | 3390B                | same                 |
 |  E210,16           -       | 3390                 | 3380                 |
 |  E220,1000                 | 3390                 | same                 |
 | 1017F,128          -       |                      | 3390A                |
 | 10220,64           -       |                      | 3390A                |
 | 10310,48           -       |                      | 3390A                |
 | 2F900              -       | 3390S                | same                 |
 | 2F901              -       | 3390D                | same                 |
 | 2F902              -       | 3390S                | same                 |
 ----------------------------|----------------------|----------------------|
 * Devices relate to the limiting LPAR via CHPIDs which have the limiting LPAR in the candidate list only.
 - Devices relate to the limiting LPAR via CHPIDs but the device is excluded from the CSS with an explicit device candidate list.
```

Figure 346. CSS / OS Device Compare

Note: A device range in a subchannel set with a subchannel set ID > 0 is displayed in a 5-digit notation, with the leading digit indicating the subchannel set ID. For example, `10310,48` denotes the devices `0310` with range 48 in subchannel set 1.

Appendix C. Problem determination for HCD

Overview

The information in this appendix is intended to help you diagnose problems that may arise with definitions that were created by the use of HCD. It explains:

- How to identify problems
- What diagnostic information and tools you can use
- How to search problem reporting data bases

Because HCD is part of z/OS, problems with HCD must generally be handled as explained in *z/OS Problem Management*.

Product Identifiers

- Module Prefix: CBD
- Component ID: 5695SC1XL

Identifying problems

Before you can begin to diagnose a system problem, you have to know what kind of problem you have.

The following table contains examples of symptoms you can use to determine a problem. Each symptom refers to a corresponding section for further problem diagnostic.

Table 25. Symptoms of system problems

Symptom	Corresponding Section
HCD terminates abnormally	"HCD abnormal termination" on page 388.
Wait State during IPL	"Error during IPL (Wait State Codes)" on page 390.
A function key assignment does not match the functions that can be performed on the panel.	"Problems with panels and function key assignment" on page 391
Messages CBDA400I to CBDA420I are displayed	"Problems with help information provided by HCD" on page 391
Output of textual report is incorrect or incomplete	"Problems with output of HCD textual reports" on page 392
Output of graphical report is incorrect or incomplete	"Problems with output of HCD graphical reports" on page 393
Messages during initialization of HCD	"Problems during initialization of HCD" on page 395
A string like ?PARMnn? appears on the Define Device Parameters / Features panel	"Problems with UIMs" on page 396
A UIM is flagged in error on the Installed UIMs panel	"Problems with UIMs" on page 396
Messages during migration	"Resolving migration errors" on page 283
HCD does not display an error message when you make a mistake	"HCD internal problems" on page 397

© Copyright IBM Corp. 1994, 2022

Table 25. Symptoms of system problems (continued)	
Symptom	**Corresponding Section**
An HCD generated IOCP input data set fails when using the IOCP program	“HCD internal problems” on page 397
Transmit configuration package action does not produce the expected results	“Problems with the Transmit Configuration Package action” on page 397

HCD abnormal termination

If HCD terminates abnormally, view the HCD message log that contains the termination message CBDA000I specifying the *system abend code* (also called *abend code*) and the *reason code* in the HCD message log.

Refer to the message descriptions shown in *z/OS and z/VM HCD Messages*. Take the action as described under "Programmer Response". If the message points to a probable logic error in one of the modules of HCD, develop a search argument for the problem-reporting data bases. If the search finds that the problem has been reported before, request the problem fix; if not, report the problem to IBM. For a list of additional information that should be provided, see the appropriate message explanation.

Diagnosing system abend code '00F'

If HCD terminates with system abend code '00F', this abend code is accompanied by a reason code, which refers to one of the HCD messages describing the reason of the failure. Note that you have to view the HCD message log for the system abend code and reason code. The reason code consists of eight digits and has the format 'mnnnllll' where:

m
Is the prefix indicating the HCD message range:

0
CBDAxxxx messages

1
CBDBxxxx messages

2
CBDCxxxx messages

6
CBDGxxxx messages

nnn
Is the message number within the HCD message range.

llll
Is the message reason code describing in more detail the reason of the message.

The information provided by the abend code can be used as a quick reference into the message. For example, the reason code 00990106 means that:

- The message CBDA099I was issued.
- The message reason code is 0106.

The reason code 00150095 means that:

- The message CBDA015 was issued.
- The message reason code is 95.

Table 26 on page 389 and Table 27 on page 389 show what the search argument and the problem data could look like.

Table 26. Search Argument		
Search Argument	**Description**	**Example**
AB/S0hhh	System abend code	AB/S000F
PRCS/mnnnllll	Reason code	PRCS/00990106
MS/ccccnnns	Message identifier	MS/CBDA099I

Table 27. Problem Data	
Problem Data	**Example**
CBDA000 abend code and reason code	00F and 00990406
CBDA099 reason code	406
CBDA099 additional error information (content of HCDMLOG). It is important that *all* information shown in HCDMLOG is recorded.	
The ID of the panel where the error occurred	CBDPPRF0
Description of what type of action the user wanted to perform when the problem occurred	Add a Processor
The TRACE output data set (See "TRACE command" on page 404 for instructions how to produce an HCD trace output.)	

ISPF list file and abend panel

Additional information on errors may be recorded in the ISPF list file.

For abends, additional information may be displayed on the ISPF abend panel.

Diagnosing system abend other than '00F'

If HCD terminates with an abend code other than '00F' (indicated in the terminating message), proceed as follows:

1. Look at the explanation of the abend code and any reason code that accompanies the abend code. Take the recommended actions.
2. Look for any messages that accompany the abend. Take the recommended actions.
3. Obtain the SYS1.LOGREC record. (Format the SYS1.LOGREC record using EREP.)
4. In SYS1.LOGREC find the SDWAVRA information which is as follows:
   - The CSECT (module) names found in the diagnostic stack.

     The CSECT names are separated by a blank. The SDWAVRA contains all CSECT names from the diagnostic stack as long as they fit into it. If the SDWAVRA is too small to contain all names, the premature end of the CSECT name trace is indicated by an asterisk.
   - The data from each diagnostic stack entry that is marked as VRA data.

     This is normally the input parameter list of the modules corresponding to the CSECT name trace.

Table 28 on page 390 and Table 29 on page 390 show what the search argument and the problem data associated with our example could look like.

Table 28. Search Argument		
Search Argument	**Description**	**Example**
RIDS/CBDccccc	CSECT name	RIDS/CBDMGHCP
AB/S0hhh	System abend code	AB/S0106
PRCS/mnnnllll	Reason code	PRCS/0000000B
MS/cccnnns	Message identifier	MS/CSV011I
FLDS/SDWAVRA VALU/cccc	SDWAVRA contents	

Table 29. Problem Data	
Problem Data	**Example**
SYS1.LOGREC error record	
SDWAVRA information	
Accompanying messages	
Component ID and FMID	
Linkage editor output	
Description of what type of action the user wanted to perform when the problem occurred	
The TRACE output data set (See "TRACE command" on page 404 for instructions how to produce an HCD trace output.)	

Error during IPL (Wait State Codes)

IOS may issue wait state codes during IPL when using an IODF to perform an IPL. The wait state codes indicate that there is a problem, for example, with an IODF data set or with device specifications in the IODF or UIM. The reason codes with the wait state codes point to the cause of the problem. For information about the codes, refer to *z/OS MVS System Codes*.

Depending on the code that was issued, you have to use the arguments that apply to the specific situation listed in the box Table 30 on page 390. The same applies for submitting problem data.

Table 30 on page 390 and Table 31 on page 391 show what the search argument and the problem data could look like.

Table 30. Search Argument		
Search Argument	**Description**	**Example**
WS/D0hhh	Wait state code	WS/D0083
PRCS/mnnnllll	Reason code	PRCS/00000002
MS/cccnnns	Message identifier	
PIDS/name of UIM	Program name	PIDS/CBDUS005
VALU/Ccccccccc (if applicable)	Message variable text	

Table 31. Problem Data	
Problem Data	**Example**
Wait State Code	D0083
Reason Code	01
Accompanying message	
UIM name (if available)	CBDUS005
Stand-alone dump	
IODF dump	

Problems with panels and function key assignment

If problems with panels or the assignment of function keys occur, ensure the following:

- Data set SYS1.SCBDTENU must be allocated to ISPTLIB and data set SYS1.SCBDPENU to ISPPLIB.
- SYS1.SCBDCLST must be allocated to SYSPROC
- SYS1.SCBDPENU, SYS1.SCBDMENU, and SYS1.SCBDTENU must be dynamically allocated when HCD has been started. Compare with LIBDEF definitions in CBDCHCD.

If the library allocation is correct, develop a search argument, and if no problem solution is found, report the problem. To display the panel identifier, use the ISPF command PANELID. The name of the function panel will be shown in the upper left corner of the panel.

Table 32 on page 391 and Table 33 on page 391 show what the search argument and the problem data could look like.

Table 32. Search Argument		
Search Argument	**Description**	**Example**
RIDS/CBDccccc	Panel identifier	RIDS/CBDPHW10

Table 33. Problem Data	
Problem Data	**Example**
Panel identifier and name of the panel where the error was detected.	CBDPHW10 Define, Modify, or View Configuration Data
Type of error found.	

Problems with help information provided by HCD

Messages that relate to problems with the HCD help facility have the identifiers CBDA400I to CBDA420I. Use the commands:

- HELPID to display the name of the help panel at the end of the command line. The name is displayed in the command line just before the scroll field. It can be used as search argument.
- HELPTEST to display the help panel while in help mode. It allows you to review or test any help panel while in help mode. That is, it eliminates the need to create the appropriate situation if a review or test of a help panel is required.

  This command can also be used to get the help information for a message. The help member for a message consists of the message ID minus the trailing severity indicator (such as "I"). For example, the help member for message CBDA200I has the name CBDA200. Thus you may get an explanation for messages that are not yet listed in the messages documentation.

Problem with content, wording, mismatch

If problems with content, wording, or mismatches are encountered, obtain the help panel name by using the HELPID command. The help panel name is displayed at the end of the command line.

Table 34 on page 392 shows what the search argument could look like.

Table 34. Search Argument

Search Argument	Description	Example
RIDS/CBDcccc	Help panel name	RIDS/CBDF403
RIDS/CBDccccc	Panel identifier	RIDS/CBDPDVF0

Problem shown by help messages CBDA400I or CBDA405I

If message CBDA400I or CBDA405I is issued, check:

1. The library concatenation for your HCD invocation.
2. That the help members are installed in the proper libraries (in SYS1.SCBDHENU).
3. That the help library is allocated either in LINKLST member or to ISPLLIB.

Problem shown by help messages other than CBDA400I and CBDA405I

If a message in the range CBDA400I to CBDA420I but other than CBDA400I and CBDA405I occurs, you have probably encountered a logic error in the dialog.

Table 35 on page 392 and Table 36 on page 392 show what the search argument and the problem data could look like.

Table 35. Search Argument

Search Argument	Description	Example
MS/cccnnns	Message identifier	MS/CBDA404
RIDS/CBDcccc	Help panel name	RIDS/CBDF401

Table 36. Problem Data

Problem Data	Example
Message identifier of the message that was issued. All additional information shown in the message, such as the name of the help panel or the reference phrase.	CBDA404
Panel identifier	CBDPDVF0
Help panel name	CBDF401
Description of the related field (in case of field help).	Action entry field
Name of the action choice (in case of action bar help).	
Name of the command (in case of command help).	

Problems with output of HCD textual reports

Use this procedure if you find problems that relate to the HCD report facility.

1. Check the output of the report job for messages that provide additional information.
2. For incorrect or incomplete output:
   a. Compare the contents of the IODF with the output. For example, if the device features are not shown correctly in the OS device detail report, use the action ***View device definition*** on the I/O Device List to display the definitions of the device for which the report seems to be incorrect.
   b. If you find out that the definitions in the IODF are correct, but the report output is incorrect, report this problem to IBM.

Table 37 on page 393 shows what the problem data could look like.

Table 37. Problem Data

Problem Data	**Example**
Type of report that was to be created.	Control unit detail report
JCL that was used to create the report.	
The content of the IODF for which the report was requested. Refer to "TRACE command" on page 404 to create an IODF dump.	

Problems with output of HCD graphical reports

When you have any problems printing or viewing a graphical configuration report, read the following problem descriptions. If you have any other problem, report the problem to IBM.

Screen shows four dots

When displaying the configuration, the screen shows only four dots.

Check that the background and foreground color you specified in the HCD profile match. Choose a foreground color that is visible on the background color.

Incorrect DCF, GDF, or GML format in output data set

You can simply check, whether you have created the output format you have specified in the profile using the keyword GCR_FORMAT. Browse or edit the created data set.

BookMaster format looks like this:

```
:userdoc
.layout 1
.dr thick weight .4mm
.rh on
.sp 2
```

DCF format looks like this:

```
.df graph font X0GT20
.tr 31 AC BE BC 76 AB 30 BB 15 8F 77 CB 78 CC 80 EB 64 EC 6A FA 24 BF
.ll 240mm
.dr thick weight .4mm
.rh on
.sp 2
```

GML format looks like this:

```
:gdoc
.df graph font X0GT20
.tr 31 AC BE BC 76 AB 30 BB 15 8F 77 CB 78 CC 80 EB 64 EC 6A FA 24 BF
.ll 240mm
.dr thick weight .4mm
```

```
.rh on
.sp 2
```

If the output is not correct, make sure that:

- The HCD profile is allocated with ddname HCDPROF before invoking HCD.
- The profile contains the keywords GCR_FORMAT=DCF or GML and GCR_FONT with an appropriate font (for example, X0GT20 for 3820 printers).

For information on how to specify keywords in the HCD profile, refer to "Defining an HCD profile" on page 16.

Illegible printout when using DCF or GML

The output of a report data set contains correct DCF and GML format, but the printout is illegible.

Make sure that:

- A monospaced font (for example, X0GT20 for 3820 printers) is specified in the HCD profile using the keyword GCR_FONT.
- The specified font is installed on your printer.

Output exceeds page boundary

The printed output exceeds page boundary.

Make sure that:

- During printing you specified a parameter to print the report in landscape format, that is to rotate the printout by 90 degree.
- The parameter LAYOUT 1 was specified to use the full page for the report.

Box characters are not correct

When using DCF formatting, the box characters are not correct.

The graphical print facility uses special hex characters for the various box characters. These special characters are then translated to real box characters by means of the .tr command. If the selected font does not contain the box characters, you must either choose another font or modify the .tr command in the file generated by the graphical print facility. See the following table for information on which hex combinations HCD uses for the various box characters.

```
.tr 31 AC BE BC 76 AB 30 BB 15 8F 77 CB 78 CC 80 EB 64 EC 6A FA 24 BF
```

where

31
Upper left corner

BE
Upper right corner

76
Lower left corner

30
Upper right corner

15
Junction (+)

77
Upward T

78
Downward T

80
Leftward T

64
Rightward T

6A
Bar

24
Hyphen (dash)

Table 38 on page 395 shows what the problem data could look like.

Table 38. Problem Data	
Problem Data	**Example**
Type of report that was to be created.	LCU report
The content of the IODF for which the report was requested. Refer to "TRACE command" on page 404 to create an IODF dump.	

Problems during initialization of HCD

If a problem occurs during initialization, HCD does one of the following:

- Issues a message and continues the initialization
- Terminates the initialization

Whether the initialization of HCD *continues* or *terminates* depends on the error that is encountered as explained in the following.

Initialization continues

If a UIM service routine encounters an error during initialization, HCD works without this UIM. HCD pops up messages on the user's terminal to inform the user that messages were written to the message log.

Note: If an error is encountered in a UIM *and* if SYSUDUMP is allocated, HCD does not continue. An HCD abend '00F' is forced to provide a dump at the point where the error was detected.

Use the option ***List Installed UIMs*** to display the panel "Installed UIMs". On this panel, the UIM is marked as in error. (Refer to "Query installed UIMs" on page 237.)

If you do not have access to any UIM, check if your UIMs are correctly installed. In the HCD profile you can specify the name and volume serial number of the library that contains the UIMs (see "Defining an HCD profile" on page 16). If you do not specify a name in the profile, SYS1.NUCLEUS is assumed as default names for the UIMs.

Initialization is terminated

The initialization is terminated either with an abend or with a message.

In case of an abend, the dialog:

- Pops up message CBDA040I on the user's terminal. The message informs the user that HCD has abnormally terminated.
- Puts message CBDA050I with abend code '00F' in the message log. The message also provides a reason code.
- Puts the message that is issued by a UIM service routine in the message log.

If an error is encountered in a UIM *and* if SYSUDUMP is allocated, an HCD abend '00F' is forced to provide a dump at the point where the error was detected.

Message CBDA041I

Means that HCD is not able to find the UIMs. If this message is issued during initialization using the "CIT" variable, make sure that the UIMs are installed in SYS1.NUCLEUS.

Table 39 on page 396 and Table 40 on page 396 show what the search argument and the problem data could look like.

Table 39. Search Argument		
Search Argument	**Description**	**Example**
MS/cccnnns	Message identifier	MS/CBDA041I
PIDS/UIM name	UIM name	

Table 40. Problem Data	
Problem Data	**Example**
UIM name	
Message ID(s) and full message text	CBDA041I
TRACE output data set Refer to "TRACE command" on page 404.	

Problems with UIMs

For information on converting and testing UIMs, refer to *z/OS MVS Device Validation Support*.

The following explanations apply to UIMs provided by the installation and to UIMs provided by IBM.

Messages during initialization of HCD

Internal logic errors in UIMs are primarily found during the initialization of HCD. Refer to "Problems during initialization of HCD" on page 395 for information on how to proceed in case of initialization problems.

UIM problems after initialization of HCD

Internal logic errors in UIMs may also be discovered:

- During the definition of a device (as a string like ?PARMnn? on the Device Parameter Feature panel). Message CBDA381I indicates that you may have installed a back-level UIM.
- On the Installed UIMs panel when a UIM is flagged in error. In this case messages CBDA070I or CBDA096I may be issued. Message CBDA070I means that the UIM does not match the corresponding UDT. Message CBDA096I means an unresolvable conflict between a VM and MVS UIM.

You can use the message log, together with SYSUDUMP and HCDTRACE to find the error in the UIM that failed.

If the error relates to an installation-provided UIM, make appropriate corrections. For information on converting UIMs, refer to *z/OS MVS Device Valication Support*.

If the error relates to a UIM provided by IBM, report the problem.

Table 41 on page 396 and Table 42 on page 397 show what the search argument and the problem data could look like.

Table 41. Search Argument		
Search Argument	**Description**	**Example**
MS/cccnnns	Message identifier	CBDA070I
PIDS/UIM name	UIM name	CBDUS025

Table 42. Problem Data	
Problem Data	**Example**
UIM name	CBDUS025
Message ID(s) and full message text	CBDA070I
Type of action the user wanted to perform	List installed UIMs
TRACE output data set Refer to "TRACE command" on page 404.	

HCD internal problems

When you have one of the following error situations, you probably have detected an internal HCD error:

- HCD displays wrong messages or does not display a message at all when you made a mistake.
- An HCD generated IOCP input data set causes error messages when using the IOCP program.

Report problems like this to IBM.

Table 43 on page 397 and Table 44 on page 397 show what the search argument and the problem data could look like.

Table 43. Search Argument		
Search Argument	**Description**	**Example**
MS/cccnnns	Message identifier	
RIDS/CBDcccc	Panel identifier	RIDS/CBDPCH30

Table 44. Problem Data	
Problem Data	**Example**
Message ID(s)	
Panel identifier	CBDPCH30
Type of action the user wanted to perform	Change Channel path definition
Description of configuration	

Problems with the Transmit Configuration Package action

If a problem occurs during the ***Transmit configuration package*** action, HCD may:

- Not start the action due to authorization problems
- Not submit the job
- Submit the job but not complete it

Job steps of the Transmit Procedure

Transmit configuration package builds a batch job with multiple steps. The step names are:

GO
Creates an IDCAMS CLUSTER for a temporary work IODF.

ALLOCT2
Creates an IDCAMS CLUSTER for a temporary production IODF.

INIT1
Initializes the temporary work IODF.

INIT2
Initializes the temporary production IODF.

BLDPR1
The processor configurations that are contained in the configuration package are built into a data set as control statements. The processor list is specified via DD name HCDCNTL. If a processor contains a CFS channel path that has a connection to a CF partition external to the configuration package, the processor containing the CF partition is also included in the output data set.

MIGRPR1
The generated processor configuration control statements are migrated into the temporary work IODF while preserving the processor tokens from the master IODF.

PRINTPR1
The MESSAGES and LISTING data set are deleted if no error occurred.

BLDOS1
All OS configurations included in the configuration package are built into a data set as control statements. The OS configuration list is specified via DD name HCDCNTL.

MIGROS1
The generated OS configuration control statements are migrated into the temporary work IODF.

PRINTOS1
The MESSAGES and LISTING data set are deleted if no error occurred.

BLDSW1
The switch configurations of all switches containing ports that are connected to either a channel path or control unit of the processors of the configuration package are built into a data set as control statements. The switch list is specified via DD name HCDCNTL.

MIGRSW1
The generated switch configuration control statements are migrated into the temporary work IODF.

PRINTSW1
The MESSAGES and LISTING data sets are deleted if no error occurred.

BPROD
A temporary production IODF is built from the temporary work IODF.

EXPOATT
The temporary production IODF is exported attended to the specified user/node ID.

EXPOUATT
The production IODF is exported unattended to the specified system.

DEL1
The temporary work IODF is deleted.

DEL2
The temporary production IODF is deleted.

Note: Stepname GO is used for HCDDECK, HCDMLOG, HCDLIB, HCDTRACE, and HCDPROF. Thus, the data sets are made available to the steps which require them.

Temporary data sets created by the Transmit Procedure

The transmit procedure creates the following data sets:

- hlq.IODFxx.zzzz (production IODF)
- hlq.IODFxx.XMIT.package.WORK (work IODF)
- hlq.IODFxx.XMIT.package.DECK (configuration decks)
- hlq.IODFxx.XMIT.package.MSGLOG (HCDMLOG)
- hlq.IODFxx.XMIT.package.sss.MESSAGES (HCDPRINT migration messages)

- hlq.IODFxx.XMIT.package.sss.LISTING (HCDASMP migration listing)

where:

hlq	is the high level qualifier specified on the transmit panel or the HLQ parameter of the batch utility.
xx	is the suffix of the target IODF name specified with the package
package	is the name of the configuration package to be transmitted
zzzz	are the qualifiers 3-n of the target IODF name
sss	qualify the migration type (PR1 for processor, OS1 for operating systems, SW1 for switch configurations)

After a successfully completed transmit action all these data sets, except the message log file, are deleted. The message log file is preserved until it is overwritten, when another transmit action using the same package name and IODF suffix is performed.

Apart from the production IODF, all redundant data sets remaining from a cancelled transmit action are identified by their common data set name qualifiers.

```
hlq.IODFxx.XMIT.package.
```

Authorization problems

Because the last sent date of the IODF from which the transmit action is performed is updated with the current date, you require write access to the accessed production IODF. Otherwise message CBDG247I is displayed.

You also need permission to write to the data sets with the qualifiers of the IODF to be created and transmitted.

Job is not submitted

If the work IODF or production IODF to be created temporarily exists already, it is not possible to start the transmit action. This may happen when a previous transmit job was cancelled, ended with an error or another transmit job is running which uses the same high level qualifier and target IODF name.

Depending on the source of the problem this may be resolved by deleting the existing temporary IODFs or by specifying a different high level qualifier for the target IODF.

Job is not completed

The transmit action generates a batch job. Check the HCD message log file to find out if the job was executed. It is shown as a sequence of HCD batch job steps ending with a successful export message. There are several possible causes if this is not the case:

- JCL errors: check the job output. To see all statements including the inline statements which are generated by the HCD dialog and submitted, issue

  ```
  TRACE ON ID=JCL
  ```

  and perform the transmit action. For an example of a trace refer to"Customization unsuccessful" on page 400.
- If the HCD message log file shows that a particular step failed, check the job output for potential allocation problems.
- If one of the migration steps failed, check the LISTING and MESSAGES data sets. (Refer to "Temporary data sets created by the Transmit Procedure" on page 398 for more information on the data sets created during the action.) Ensure that the same versions of UIMs are available for the ***Transmit configuration package*** action as for creation of the IODF.

The MESSAGES and LISTING data sets, as well as the generated decks, are deleted if no errors occurred. If you want to keep them, you can modify the conditional statements in procedure CBDJXMIT for the migrate steps. Do this by copying CBDJXMIT to a new procedure.

Proceed as follows, if you need to trace particular steps:

1. Define a profile including a TRACE statement.
2. Specify the stepname.HCDPROF DD with the profile name.
3. Allocate a trace data set name.
4. Specify GO.HCDTRACE DD with the name of the trace data set in order to use it for all steps to be traced or stepname.HCDTRACE to use the trace data set only for the single step.
5. To specify HCDDECK, HCDMLOG, HCDLIB, HCDTRACE, or HCDPROF use GO as the step name. The other steps refer to the definitions in the GO step. If you want to preserve a specific output data set, pre-allocate it to HCDDECK (see "Build I/O configuration data" on page 301).

Customization unsuccessful

This section describes points to be considered when customizing the transmit procedure.

The transmit procedure exploits the migration batch utility, which uses parsing macro CBDZPARS (residing in SYS1.MACLIB). If you want to use a different macro library, specify this as GO.HCDLIB

The dialog always generates and submits the following statements:

- All parameters for procedure CBDJXMIT
- The JOB card, JOBLIB and overwrite statements given by the user
- IDCAMS DEFINE CLUSTER and DELETE CLUSTER statements in steps GO, ALLOCT2, DEL1 and DEL2
- An HCDCNTL DD statement for at least one of BLDPR1, BLDOS1 or BLDSW1 job steps, dependent on the package content
- The SYSTSIN for EXPOATT or EXPOUATT, depending on whether attended or unattended export is selected

The following is a sample trace showing the batch job built by a transmit action.

```
09:53:01  97-11-04  Trace started.
//XMIT     JOB (3243),'OS390H1',MSGCLASS=X,CLASS=A,REGION=4M
//JOBLIB   DD DSN=SYS1.SCBDHENU,DISP=SHR
//XMT0    EXEC PROC=CBDJXMIT,PR=1,OS=1,SW=1,
//             ATTEND=1,RECORDS='1684',
//             DESC1='IODFST',DESC2='IODF88',
//             QUALX='IODF88.XMIT.CB88',
//             IODFTP='OS390H1.IODF88',
//             IODFTW='OS390H1.IODF88.XMIT.CB88.WORK',
//             IODFSP='IODFST.IODF11.MASTER'
//GO.SYSIN DD *
 DEFINE CLUSTER(                            -
       NAME ( OS390H1.IODF88.XMIT.CB88.WORK.CLUSTER) -
       LINEAR                               -
       RECORDS (1684) -
       VOLUMES (DS7001)) -
       DATA(NAME(OS390H1.IODF88.XMIT.CB88.WORK))
/*
//ALLOCT2.SYSIN DD *
 DEFINE CLUSTER(                            -
       NAME ( OS390H1.IODF88.CLUSTER) -
       LINEAR                               -
       RECORDS (1684) -
       VOLUMES (DS7001)) -
       DATA(NAME(OS390H1.IODF88))
/*
//BLDPR1.HCDCNTL DD *
CB88
CF14    ,CF
/*
//BLDOS1.HCDCNTL DD *
B710
/*
//BLDSW1.HCDCNTL DD *
```

```
71
72
74
77
/*
//EXPOATT.SYSTSIN DD *
    CALL 'SYS1.LINKLIB(CBDMGHCP)', +
    'EXPORT,OS390H1,PKSTCB88'
/*
//DEL1.SYSIN DD *
       DELETE OS390H1.IODF88.XMIT.CB88.WORK.CLUSTER
/*
//DEL2.SYSIN DD *
       DELETE OS390H1.IODF88.CLUSTER
/*
09:53:29  97-11-04  Trace stopped.
```

Table 45 on page 401 shows what the problem data could look like.

Table 45. Problem Data

Problem Data	**Example**
Job output	See example trace shown in section "Customization unsuccessful" on page 400.
Message log file	
Trace of failing step	
Deck for failing step	
LISTING data set	See"Job steps of the Transmit Procedure" on page 397
MESSAGES data set	See"Temporary data sets created by the Transmit Procedure" on page 398
Submitted job (via TRACE ID=JCL)	
Procedure used (if modified)	

Diagnostic information and tools

The information and tools described in this section help you to diagnose system problems.

HCD messages

In case of an error, HCD issues messages. Depending on what you are currently doing, the messages are written:

- To the terminal as a single message
- To the terminal in a message list
- In a message log
- In a migration log
- In the output of a batch job

Terminal messages

User-errors, such as erroneous syntax entry and contextually wrong definitions, are handled by the dialog at the time of data entry. That is, the dialog displays messages at the terminal and the user can take corrective action immediately.

Some operations produce multiple messages. In this case, HCD displays a message list. You can save the displayed messages from the message list into the message log. See "Message lists" on page 55 on how to work with message lists.

Message log

Errors that are of low interest for the end user, such as incomplete UIMs during initialization, are only written to the message log. The message log is a data set that needs to be fix blocked with a LRECL of 133. The user will be informed about this when leaving the dialog or switching to another IODF. Only in critical situations (for example, when the message log is not available), will the messages be written into the ISPF list data set. If this, however, also fails, the message will be written into the operating system log.

To see a message in the message log, issue the SHOWMSG command or use the ***View message log*** pull-down choice from the ***Query*** action bar on any action list panel.

Migration log

HCD maintains a migration log that contains messages issued by the migration process. You can view this migration log through ISPF.

Table 46 on page 402 shows where you can find messages while working with HCD.

Table 46. Where to find HCD messages

Mode of Operation	You Find the Message
Dialog Mode	On the terminal In the message log
Batch mode	In the message log, that is the data set allocated with ddname HCDMLOG In the output (SYSPRINT) of the batch job [1]
Migration of input data sets	In the migration log, that is the data set allocated with ddname HCDPRINT
IPL	Trapped by IPL. A wait state code is issued.

Note: [1] The output shows the message number and text; for explanations refer to *z/OS and z/VM HCD Messages*.

HCD trace facility

The output of the HCD trace facility provides information to locate internal HCD problems. It helps the IBM program system representative to identify the cause of a failure.

Data Set

The trace records generated by HCD are recorded in the trace data set. The data set need to be fix blocked with a LRECL of 80. "Allocate the HCD trace data set for remote HCD sessions" on page 421 contains a sample on how to create such a dataset.

The trace data set must be preallocated with a ddname of HCDTRACE. If the trace data set is not allocated when HCD is invoked, no tracing takes place. The default CLIST that is provided with HCD allocates a trace data set with the name HCD.TRACE, prefixed by your user ID.

Trace records

The trace records show the control flow within the various HCD modules. Trace information is written into the trace data set:

- Whenever a module (CSECT) gets control.

  In this case, the passed parameter list is recorded together with the name and description of the invoked module.
- Whenever a module (CSECT) returns to its calling routine.

The passed parameter list containing the return and reason codes is recorded.

When HCD is invoked, HCD overwrites the existing trace with the new trace data. If you want to retain the existing data, you have to make sure that the data is saved.

Figure 347 on page 403 is an example of a trace output. The following explains the records you see:

```
17:00:13  96-08-01  Trace started
```

The time stamp shows when the trace facility was started. This record is useful to identify the trace data sets when multiple traces are produced on the same day.

```
PUSH CBDMSMSG   -   Message Routine  96214 HCS6031   17001352   08472028
```

This line indicates that control has been passed to another module at a certain time. In this example, the module named CBDMSMSG with service level '96214 HCS6031' received control at 17:00:13.52 at storage address X'08472028'. The records also give a short description of what the module does, and the parameter list that is passed to the called module.

```
CBDMSMSG Message destination: Screen
```

This trace entry is written by the called module.

```
POP CBDMSMSG   -   Message Routine                   17001353
```

Indicates that control from the module named CBDMSMSG is returned to the calling routine at 17:00:13.53. Also, the passed parameter list is shown again, but now the parameter list contains the return/reason code indicating how successful the requested function was.

```
17:01:24  96-08-01  Trace stopped
```

The last entry in the trace output is a time stamp that indicates end of tracing.

```
17:00:13  96-08-01  Trace started.
⋮
PUSH CBDMSMSG   -   Message Routine  96214 HCS6031 17001352   08472028
00000000    D4E2C740 C3C2C4C1 F1F2F6C9 C9000100   *MSG CBDA126II"""*
00000010    00000000 00000000 00000000 00000000   *"""""""""""""""*
00000020    00000000 00000000 00000000 00000000   *"""""""""""""""*
00000030    00000000 00000000 00000000 00000000   *"""""""""""""""*
00000040    00000000 00000000 00000000 00000000   *"""""""""""""""*
00000050    00000000 00000000 00000000 00000000   *"""""""""""""""*
00000060    00000000 00000000 00000000 00000000   *"""""""""""""""*
00000070    00000000 00000000 00000000 00000000   *"""""""""""""""*
CBDMSMSG Message destination: Screen
00000000    E3D9C1C3 C5408396 94948195 8440A681   *TRACE command wa*
00000010    A2408183 838597A3 85844B              *s accepted.     *
POP  CBDMSMSG   -   Message Routine                         17001353
00000000    D4E2C740 C3C2C4C1 F1F2F6C9 C9000100   *MSG CBDA126II"""*
00000010    00000000 00000000 00000000 00000000   *"""""""""""""""*
00000020    00000000 00000000 00000000 00000000   *"""""""""""""""*
00000030    00000000 00000000 00000000 00000000   *"""""""""""""""*
00000040    00000000 00000000 00000000 00000000   *"""""""""""""""*
00000050    00000000 00000000 00000000 00000000   *"""""""""""""""*
00000060    00000000 00000000 00000000 00000000   *"""""""""""""""*
00000070    00000000 00000000 00000000 00000000   *"""""""""""""""*
    .
    .
    .
17:01:24  96-08-01  Trace stopped.
```

Figure 347. Example: Trace output

Figure 348 on page 404 is an extract of a trace output when an abend occurred. The following explains the record in the example.

ESTAE

The entries show information that was recorded by the HCD ESTAE routine. Entries under ***Diagnostic stack*** list the modules that were executing when the abnormal termination occurred, together with the service levels. The first entry names the module that ended abnormally; in this example, the module is CBDMYCCB. The entries also show the control flow between the various HCD modules and the load address of the module. In this example:

- Module CBDMYDCC called module CBDMYCCB loaded at 212E0EF8.
- Module CBDMGDIA called module CBDMYDCC loaded at A12D4000.
- Module CBDMGHCP called module CBDMGDIA loaded at A1846B50.

```
*************************************************************************
*           E S T A E                                                   *
*           System abend code  :  0C4                                   *
*           Reason code        :  00000011                              *
*           HCD version        :  z/OS 2.3 HCD                          *
*           Diagnostic stack   :  CBDMYCCB   15238   HCS77B0    212E0EF8   *
*                                 CBDMYDCC   15237   HCS77B0    A12D4000   *
*                                 CBDMGDIA   15194   HCS77B0    A1846B50   *
*                                 CBDMGHCP   15197   HCS77B0    800695E0   *
*                                                                         *
*           Module name        :  CBDMGHCP                              *
*           Entry point address:  000695E0                              *
*           PSW                :  078D1000 A12FB2AE                     *
*                                                                         *
*    R0  00000030  R1  21AD3000  R2  21AD3194  R3  00002F10             *
*    R4  21305608  R5  21305608  R6  21306607  R7  212FB1CF             *
*    R8  21307606  R9  21308605  R10 00000450  R11 21AD35E4             *
*    R12 A12FA1D0  R13 21305AD4  R14 21ADF060  R15 21B5BF10             *
*************************************************************************
```

Figure 348. Example: Trace output in case of Abend

Activating the trace

The trace can be activated either:

- Dynamically by using the TRACE command in the HCD dialog. The command is optional, and can be entered whenever a displayed panel has a command line. For information on the TRACE command, refer to "TRACE command" on page 404.
- By invoking HCD (for details see Chapter 13, "How to invoke HCD batch utility functions," on page 289) with the TRACE option specified in the passed parameter string (this is done automatically by the entry in the CLIST).

```
//BWINJOB  JOB (3259,RZ-28),'BWIN',NOTIFY=BWIN,CLASS=A,
//             MSGCLASS=Q,MSGLEVEL=(1,1),REGION=4M
//REPORT1  EXEC PGM=CBDMGHCP,
//              PARM='TRACE,REPORT,CSMEN,PROC1,PART1,MVS1,00'
                     .
                     .
                     .
//HCDTRACE DD   DSN=BWIN.HCD.TRACE,DISP=OLD
//
```

- By specifying the TRACE command in the HCD profile, for example,

```
TRACE ON RESET,HOM,V,R LEVEL=255
```

The tracing stays active until either turned off by the TRACE command, or until HCD terminates.

TRACE command

The TRACE command activates and deactivates the HCD trace facility. The command allows you also to limit the detail of data written into the trace data set by requesting that only certain functions and details should be traced.

The TRACE command can be entered on any HCD panel showing a command line. The command can also be specified in the HCD profile data set. It is, however, not shown in the ***HCD Profile Options*** dialog.

For HCD to write the output to the trace data set, ON must be specified with at least one trace category (or you must have invoked HCD with the TRACE parameter, see "Activating the trace" on page 404). To view the trace output, you have to close the trace data set first. You can do this by either leaving HCD or by entering the command TRACE OFF,CLOSE.

The format of the command is as follows:

TRACE Command

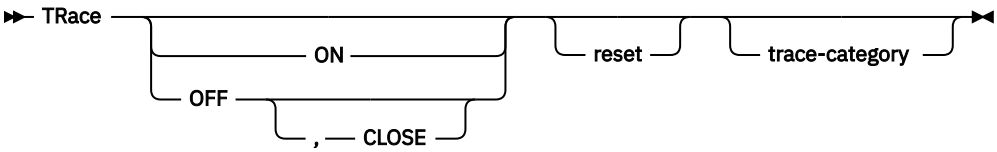

trace-category

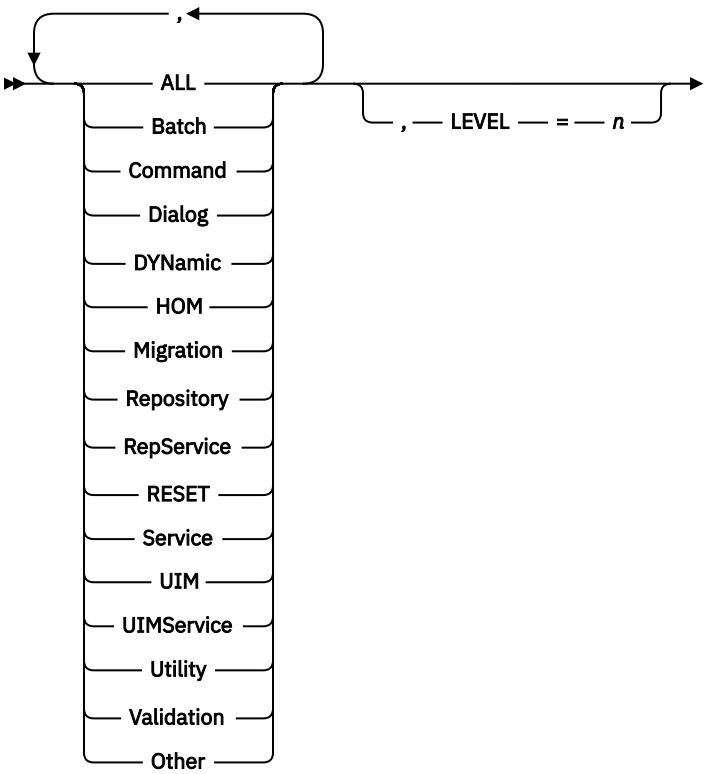

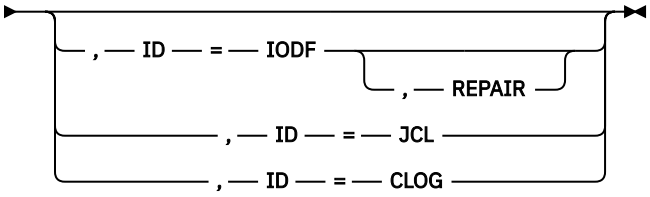

Notes:

1. You may abbreviate some of the keywords. The characters you have to use are indicated by uppercase (you must then omit lowercase). For example `RepService` may be abbreviated as RS.
2. At least one parameter must be specified with TRace.

ON
Starts the trace facility.

OFF
Stops the trace facility.

CLOSE
Closes the trace data set.

Note: ON, OFF and CLOSE can not be used if the profile is allocated by the HCD dispatcher and used by HCM.

reset
Reset all currently active categories, LEVEL and ID. If not using RESET, HCD will remember the trace categories specified with previous trace commands and adds them up. If combined with trace categories, it should be specified before the categories, because the keywords and categories are evaluated in sequence. RESET at the end would clear the specified trace category.

trace category
Specifies the functional scope to be traced:

ALL
Traces for all categories except DEBug and RepService. To have a complete trace, use categories ALL, DEBug, RepService.

Batch
Trace all batch routine.

Command
Trace all command routines.

DEBug
Traces internal services (not included, when ALL is specified).

Dialog
Trace all dialog routines.

DYNamic
Trace all dynamic routines.

HOM
Trace all object management routines.

Migration
Trace all migration routines.

Repository
Trace all repository main routines.

RepService
Trace all repository service routines. (Not included, when ALL is specified).

Service
Trace all service routines.

UIM
Trace all UIM routines.

UIMService
Trace all UIM service routines.

Utility
Trace all utility routines.

Validation
Trace all validation routines.

Other
Trace all other not yet mentioned routines.

LEVEL=*n*
Assigns a level of detail to the functions to be traced, where *n* is a decimal number ranging from 0 to 255. If the option is omitted, the default level of 5 is assumed. The TRACE option described in "Input parameter string" on page 290 is equivalent to the command `TRACE ON,ALL,LEVEL=255`.

ID=IODF
Writes an IODF dump into the trace data set. This parameter cannot be specified in the HCD profile. If you have a consistent IODF, an output in the trace data set is only shown when you set LEVEL=128 or higher. Otherwise, an output is only shown if the IODF contains defects.

REPAIR
Removes detected errors in the work IODF and reports corrections in the trace data set. Before you use the REPAIR option, you must set the work IODF in update mode.

ID=JCL
Writes into the trace data set all statements generated when action ***Transmit configuration package*** is invoked from the HCD dialog.

ID=CLOG
Writes the contents of the change log file into the HCD trace data set. You should use this option together with LEVEL=8. This parameter cannot be specified in the HCD profile.

Trace command via HCD profile

- If HCD is started with the TRACE keyword, (for example, either started via HCM with the ***HCD Trace*** box selected in the HCM login dialog, or via the IBM Tivoli® Directory Server for z/OS configuration file), initially *all* the trace categories will be traced. After the HCD profile has been read, however, the TRACE parameters there may modify the TRACE behavior.
- The TRACE parameters set in the HCD profile will also influence the TRACE behavior if you activate the tracing in HCM at a later time.
- The TRACE parameters set in the HCD profile will determine the contents of the trace for the rest of the session.
  - If you use the RESET option followed by trace categories *cat1,cat2,...,catn*, then only the categories *cat1,cat2,...,catn* will be considered. The RESET option must be the first option because the trace categories are additive (LEVEL is set to 0).
  - Specifying the keyword `off` will terminate the startup trace.
  - Specifying the keyword on will start the HCD trace (if not already started) and will invoke the trace parameters of the TRACE statement.
  - Specifying LEVEL=*n* will set the level of trace detail. If the LEVEL parameter is not set, then the trace will use the default level of 5.
- If no categories are set explicitly, then all trace categories will be active.

Tracing for activate commands

When activating using an activate command or when performing activate actions sysplex wide (see Chapter 9, “How to activate or process configuration data,” on page 175), which utilizes the activate commands internally. It is not possible to allocate a HCD trace or HCD profile dataset for the console user. Therefore, a trace command on the sysplex wide activate panels do not have any effect on the target system and tracing does not happen. In order to bebug activate problems, a users has to work with local activates (option 2.6 in HCD).

If an activate command is issued, HCD will check for the existence of a member CBDPROF in the parmlib concatenation (for example: SYSn.PARMLIB or USER.PARMLIB) on the target system to be activated.

If both keyword TRACE_DATASET and a trace command are defined, tracing will be activated and the trace is written to the trace dataset defined.

- TRACE_DATASET = your.trace.dataset, (which must exist and the user must have write access).
- TRACE command to specify, what is to be traced. (For example: TRACE ON RESET DYN ID=CCB LEVEL=10).

Other profile keywords are evaluated as well (for example: DEVGRP_ACTIVATE), but most of them will not have an effect during activate.

Note: This profile will be used for all activates on the system which are triggered by an activate command or by a batch when no HCD profile is allocated. Therefore, it is recommended to delete member CBDPROF again after a trace has been produced and only use this mechanism to analyze specific problems.

IODF dump

Use the ID=IODF parameter of the TRACE command to produce an IODF dump. This command goes through your IODF, checks it for corrupted data, and writes all records and defects into the trace data set. If you have a consistent IODF, you must set the LEVEL parameter to LEVEL=128 or higher to get an output. Otherwise, an output is only shown if the IODF contains defects.

If your IODF has defects, error message CBDA999I 'Defect(s) detected in IODF xxx' is displayed, and message CBDA099I is written into the message log data set. In addition, the trace data set records defects with the string 'Error:' followed by the reason. You can locate the reported defects by searching to that string in the trace data set.

If no defects are detected in the IODF, message CBDA126I 'TRACE command was accepted' is given.

If you cannot invoke HCD, and therefore, cannot use the TRACE command any longer, use a JCL stream for producing a dump. Figure 349 on page 408 is an example of the JCL stream for producing an IODF dump.

Make changes to the entries according to your installation requirements.

```
//WAS$IODF JOB '3259,BOX01,S=C','SMITH',MSGLEVEL=(1,1),
//             NOTIFY=WAS,CLASS=A,MSGCLASS=Q,REGION=4096K
//PRTVSAM  EXEC PGM=IDCAMS
//INPUT    DD  DSNAME=WAS.IODF02.WORK,DISP=SHR
//OUTPUT   DD  DSNAME=WAS.IODF02.DUMP,UNIT=SYSALLDA,
//             SPACE=(CYL,(20,10)),
//             DCB=(LRECL=125,BLKSIZE=629,RECFM=VBA),
//             DISP=(NEW,CATLG)
//SYSPRINT DD  SYSOUT=*
//SYSIN    DD  *
     PRINT -
       INFILE(INPUT) -
       DUMP -
       OUTFILE(OUTPUT)
/*
//
```

Figure 349. Example: JCL stream for producing an IODF dump

Repair an IODF

If your IODF contains defects, some of them can be repaired with the REPAIR option of the TRACE ID=IODF command.

First, your IODF must be set in update mode to correct defects. You can do this, for example, by changing a processor description field in your work IODF. A production IODF cannot be repaired.

To repair defects in your work IODF, add the REPAIR option to the TRACE ID=IODF command: TRACE ON,REPAIR,ID=IODF.

Each corrected defect is recorded in the trace data set with the string `Defect has been corrected`.

If a defect has been repaired, message CBDA998I, `Defect(s) detected in IODF xxx. Repair action performed` is issued. Repeat the TRACE ID=IODF command to check whether all defects could be corrected.

An IODF that has been enabled for multi-user access cannot be repaired. You first must disable it for multi-user access before it can be set into update mode and be repaired.

If defects in the IODF cannot be repaired via the REPAIR option, you may have to rebuild the IODF. You accomplish this task by exporting the configuration data from the IODF via dialog option 2.10 ***Build I/O configuration data***. You can then migrate this data to a new IODF:

1. Export configuration types `Processor`, `Operating System` and `Switch` with configuration ID `*` into three different output data sets (see "Build I/O configuration data" on page 192). This will generate I/O configuration statements for all processor, operating system and switch configurations. You can set the profile option SHOW_CONFIG_ALL to YES to also generate configuration statements for unconnected control units and devices in addition to those for switches (see "Export/import additional configuration objects" on page 25).
2. Successively migrate the processor, OS configuration and switch data into a new IODF (see "Migrate I/O configuration statements" on page 292). You must use batch jobs for this purpose, since in dialog mode, HCD does not support the configuration ID `*`.
3. Verify - for example using compare reports - that the new IODF includes all data. If necessary, add any missing items manually.
4. Check that the IODF is free from defects.

MVS dumps and traces

To aid in diagnosing problems, z/OS automatically provides messages and error records, and on request dumps and traces. HCD uses those services to record errors. For information about:

- Dumps and traces, refer to *z/OS MVS Diagnosis: Tools and Service Aids*.
- Using the diagnostic information, refer to *z/OS Problem Management*.

IPCS reports

z/OS allows you to format dumps into diagnostic reports. To produce the reports, use the Interactive Problem Control System (IPCS).

For more information, refer to:

- *z/OS MVS IPCS User's Guide*
- *z/OS MVS IPCS Commands*
- *z/OS MVS IPCS Customization*

Searching problem reporting data bases and reporting problems

Search arguments are used to search problem reporting data bases. If the problem being diagnosed was already reported and the symptoms entered into the data base, the search will produce a match.

To perform a search, do the following:

1. Analyze the problem reporting data base and develop a search argument using the information provided in the boxes labeled *Search Argument*.
2. Complete the digits (such as ccc, nnn, hhh) according to the applicable conditions. For example, if the message CBDA099I was received, the developed search argument for *message identifier* would be: MS/CBDA099I. An example is shown in Table 26 on page 389.
3. Use the search arguments to search *problem reporting data bases*. If the search finds that the problem has been reported before, request a fix from IBM.

   If the search is unsuccessful, report the problem to the IBM Support Center. Submit the information that is listed in the *Problem Data* tables. An example is shown in Table 27 on page 389.

For more detailed information on these steps, refer to *z/OS Problem Management*.

Sending an IODF to a different location

There may be situations, in which an IODF is to be transferred to a different location or system. Usually, the HCD Export/Import Utility can be used to transmit the IODF to the desired target destination. Sometimes, however, there are situations, where this may not be possible (e.g. a direct connection does

not exist). The following steps describe a simple method in which you can transfer your IODF data from one z/OS host to any other z/OS host even if a direct transmission path not available.

1. Examine the size of the IODF, which is to be transferred. Check for the number of allocated 4K blocks in the HCD dialog: ***Maintain I/O definition files ---> View I/O definition file information***.
2. Use the HCD Export function, found under the HCD dialog ***Define, modify, or view configuration data***, ***Export I/O definition file*** in the HCD dialog. Send the IODF to your own user ID; that is, to the user ID of the host on which you are currently working. HCD will export the IODF data as a sequential data set to your own user ID. If you specify an asterisk (*) for the target user ID and target node ID, the sequential data set is not transmitted but rather written directly to the data set *user*.EXPORTED.IODFnn.xxxx. In this case, you can skip step "4" on page 410.
3. Exit the HCD dialog.
4. Use the TSO RECEIVE command to retrieve the IODF data from your internal reader. Per default, you will get a sequential data set *user*`.EXPORTED.IODFnn.xxxx`. This data set has the record organization FB and `LRECL=BLKSIZE=4096` and the number of blocks as mentioned under step "1" on page 410).
5. Download this data set to your workstation. It is important that you ensure that the download is in *binary* mode.
6. To save storage resources, you may consider compressing (zipping) the downloaded file on the workstation.
7. Now you can transfer the IODF to a different workstation/location. Once the IODF data has arrived at the target workstation, you have to uncompress (unzip) the file if it has been compressed for transportation.
8. On the target z/OS host pre-allocate a data set into which the IODF data is to be uploaded. It must be a sequential data set with `FB, BLKSIZE=LRECL=4096` and the number of blocks must be the number of allocated blocks of the original IODF (see step "1" on page 410).
9. Upload the IODF data from the workstation to the z/OS host in binary mode into the pre-allocated sequential data set.
10. Use the HCD Import function, found under the HCD dialog ***Define, modify, or view configuration data***, ***Import I/O definition file*** and specify the sequential data set to be imported into an IODF data set using the name of your choice.

Appendix D. HCD object management services

Programming Interface information

The HCD object management services (HOM) provide an application programming interface for retrieving data from the IODF, such as switch data, device type, or control unit type. The programs requesting the services cannot run in APF-authorized state.

The mapping macros CBDZHRB, CBDZHIEX, CBDZHOEX, and CBDZHCEX (see "Data input and output areas" on page 412 and "Request block (HRB)" on page 412) are not available as source code. The macros are listed in *z/OS MVS Data Areas* in the z/OS Internet library (www.ibm.com/servers/resourcelink/svc00100.nsf/pages/zosInternetLibrary), and must be coded by the application writer.

How to invoke the HOM services

Programs can invoke the services from the HCD routine CBDMGHOM. An application issuing a request must have its own copy of the CBDMGHOM routine dynamically loaded or linked. For every request, the application must use the same HRB address for each call to CBDMGHOM and must pass the parameters shown in Table 47 on page 411 using standard linkage conventions.

Table 47. Used registers and passed parameters

Register	Contents
0	Undefined
1	Address of five-word parameter list: 1. **Address of request control block (HRB)** 4-byte field containing the address of the request block. The request block contains the function, the object to which the function is applied, and qualifiers, attributes, and parameters. See "Request block (HRB)" on page 412 for more details. 2. **Address of (pointer to input data or zero)** 4-byte field containing the address of the address of the data input block if the request requires input. It is required on a HRB_SETUP request. See "Data input and output areas" on page 412 for more details. 3. **Address of (length of input data or zero)** 4-byte field containing the address of the fullword fixed binary integer containing the length of the input data. It must correspond to the exact length of the data contained in the data-input block, that is, no trailing or intermediate blanks are allowed. 4. **Address of (pointer to output data or zero)** 4-byte field containing the address of the address of the data output block if the request returned output. It is required on HRB_DGET and HRB_MGET requests to obtain the data and messages from the API. See "Data input and output areas" on page 412 for more details. 5. **Address of (length of output data or zero)** 4-byte field containing the address of the fullword fixed binary integer containing the length of the output data. The parameters must be coded in the order shown. Only the first parameter (address of request block) is mandatory. The others are optional and depend on the type of request, as shown in Table 49 on page 414. If you omit an optional parameter, you must specify a zero instead.

© Copyright IBM Corp. 1994, 2022

Table 47. Used registers and passed parameters (continued)	
Register	**Contents**
2-12	Undefined
13	Address of 18 word save area
14	Return address
15	Entry point address

Note: The service supports calls for both 24-bit and 31-bit addressing mode.

Data input and output areas

Data input and output areas must be contiguous areas of main storage allocated by the application in private storage and freed later on.

The areas have no header section, that is, the data starts at the first byte of the area and continues without gaps. The data contained in these areas are the interface records, which are described in the mapping macros CBDZHOEX and CBDZHIEX in *z/OS MVS Data Areas* in the z/OS Internet library (www.ibm.com/servers/resourcelink/svc00100.nsf/pages/zosInternetLibrary).

For the GET request, the output area might contain the definition of multiple objects on return, whereas the input area normally contains only one object.

Issue a HRB_DGET function to get the provided output data. The size of the output data is returned by the previous GET request. The application is responsible to allocate the correct output size. If the data does not fit into the size allocated by the application for the output area, the data will be truncated.

Request block (HRB)

The HOM request block (HRB) you have to set up is described fully as mapping macro CBDZHRB in *z/OS MVS Data Areas* in the z/OS Internet library (www.ibm.com/servers/resourcelink/svc00100.nsf/pages/zosInternetLibrary). Table 48 on page 412 summarizes the request block names and constants you can specify for the functions shown in Table 49 on page 414.

On input, this block contains the detailed request to the HOM services. On output, it contains the data requested, messages, return codes, and reason codes.

The field HRB_OBJECT with all its subfields describes the object that should be processed on the request to the API.

The object code HRB_OBJ_CODE must be coded for every request, because it identifies the class of objects that are subject of the actual request.

The constants and flags required to describe the objects are contained in CBDZHCEX, which is documented in *z/OS MVS Data Areas* in the z/OS Internet library (www.ibm.com/servers/resourcelink/svc00100.nsf/pages/zosInternetLibrary).

Table 48. Summary of Request Block Names and Related Constants		
Name	**Constants**	**Description**
HRB_SDESC	HRB_SDESC_C	Request block storage descriptor. Required for all requests.
HRB_LENGTH		Length of the request block HRB.
HRB_USE_IODF		Name of the IODF to be used for the request.

Table 48. Summary of Request Block Names and Related Constants (continued)		
Name	**Constants**	**Description**
HRB_FUNCTION	HRB_SETUP HRB_OPEN HRB_GET HRB_ACT_STATUS HRB_DGET HRB_MGET HRB_CLOSE HRB_TERMINATE	Function code
HRB_OBJ_CODE	HRB_HCD	Required for SETUP and TERMINATE.
	HRB_IODF	Required for OPEN and CLOSE.
	HRB_PROCESSOR	Required for processor.
	HRB_CSS	Required for channel subsystem.
	HRB_PCU	Required for physical control unit.
	HRB_DEVICE	Required for device.
	HRB_SWITCH	Required for switch.
	HRB_CHANNEL	Required for channel path.
	HRB_DATA	Required for DGET.
	HRB_MESSAGE	Required for MGET.
	HRB_IODF	Required for ACT_STATUS.
HRB_OBJ_NAME		May be used to specify the name and number of an object. For devices, the number includes the suffix.
HRB_OBJ_NR		
HRB_Q_CODE	HRB_PCU HRB_DEVICE HRB_SWITCH	May be used together with HRB_PROCESSOR to specify that the processor data is qualified by the control unit, device, or switch.
	HRB_PROCESSOR	May be used together with HRB_CHANNEL to determine the kind of channel path data.
HRB_Q_NAME		May be used to specify the qualifier name and number for composite names.
HRB_Q_NR		
HRB_REQ_MODE	HRB_MODE_ID	Gets objects starting with the ID specified. The ID of the object must be set in HRB_OBJ_NR or HRB_OBJ_NAME. The HRB_RANGE_VALUE must not be zero.
	HRB_MODE_FIRST	Gets first object in the defined scope.
	HRB_MODE_LAST	Gets last object in the defined scope.
	HRB_MODE_ALL	Gets all objects in the defined scope.
	HRB_MODE_CHAIN	Gets all objects within the chain defined by the given object, for example, all devices of a multi-exposure device.

Table 48. Summary of Request Block Names and Related Constants (continued)		
Name	**Constants**	**Description**
HRB_RANGE_VALUE		May be used to specify the number and direction of objects to be processed (positive number = subsequent objects; negative number = preceding objects).
HRB_TRACE	HRB_YES	The request is traced. Make sure that the trace data set is allocated with a DD name of HCDTRACE.
HRB_RESULT		The subfields of HRB_RESULT contain the output of the request, such as the data requested, the size of the output data, or return codes.

Functions

The HCD application programming interface provides the functions described in Table 49 on page 414. The functions are listed as you need them while requesting data from the HCD HOM services. The constants you have to specify for HRB_FUNCTION and HRB_OBJ_CODE are included in the figure.

Table 49. Functions provided by the HOM services			
	Fields in Request Block (HRB)		
Task	**HRB_FUNCTION=**	**HRB_OBJ_CODE=**	**Explanation**
1. Set up the connection to the HCD API			
Setup connection	HRB_SETUP	HRB_HCD	Establish the HCD environment by passing the setup function in the request block. **Input:** HCD session interface (HSI) record.
2. Open the IODF			
Open IODF	HRB_OPEN	HRB_IODF	Open an IODF, for which you have read authority, by passing the HRB_OPEN function in the request block.
3. Request data for HCD objects			
Get Processor	HRB_GET	HRB_PROCESSOR	Issue a request with the GET function to retrieve data from the IODF. The request returns the address and the length of the data output block. Issue a request with the HRB_DGET function to obtain the retrieved information. **Note:** Issue HRB_GET and HRB_MGET before requesting additional data, because the new request deletes all data and messages from the previous request.
Get Channel Subsystem	HRB_GET	HRB_CSS	
Get Channel Path	HRB_GET	HRB_CHANNEL	
Get Switch	HRB_GET	HRB_SWITCH	
Get Physical Control Unit	HRB_GET	HRB_PCU	
Get Device	HRB_GET	HRB_DEVICE	
Get Activation Status	HRB_ACT_STATUS	HRB_IODF	The request allows you to identify the currently active IODF, processor, and so on. **Output:** Activation status interface (ASI) record.
4. Get the data from the previous GET request			

Table 49. Functions provided by the HOM services (continued)			
	Fields in Request Block (HRB)		
Task	**HRB_FUNCTION=**	**HRB_OBJ_CODE=**	**Explanation**
Data Get	HRB_DGET	HRB_DATA	Issue the request with the address and length of the output area to obtain the data retrieved with the previous GET function. **Output:** Interface record for the object.
Message Get	HRB_MGET	HRB_MESSAGE	Check the return and reason code of the previous GET request. If the return code is warning, error, or severe, issue the request with the address and length of the output area to obtain the messages. **Output:** Message interface (MSI) record.
5. Close the IODF			
Close IODF	HRB_CLOSE	HRB_IODF	When you do not need the IODF anymore, close the IODF by issuing a request with the close function.
6. Terminate the connection to the HCD API			
Terminate connection	HRB_TERMINATE	HRB_HCD	When you do not need the HOM services anymore, terminate the connection by issuing a request with the terminate function.

Example

The example shows how to get a range of 20 devices, starting with ID X'414'and connected to control unit X'21'. The example is shown in pseudo-code because the actual syntax and declarations depend on the programming language used.

```
…
HRB_SDESC       = HRB_SDESC_C
HRB_LENGTH      = length-of-HRB
HRB_FUNCTION    = HRB_SETUP
HRB_OBJ_CODE    = HRB_HCD
Load or link CBDMGHOM with: (HRB,HSI-address,HSI-length,0,0)
 …
HRB_SDESC       = HRB_SDESC_C
HRB_LENGTH      = length-of-HRB
HRB_USE_IODF    = IODF-name
HRB_FUNCTION    = HRB_OPEN
HRB_OBJ_CODE    = HRB_IODF
Load or link CBDMGHOM with: (HRB,0,0,0,0)
 …
HRB_SDESC       = HRB_SDESC_C
HRB_LENGTH      = length-of-HRB
HRB_USE_IODF    = IODF-name
HRB_FUNCTION    = HRB_GET
HRB_OBJ_CODE    = HRB_DEVICE
HRB_OBJ_NR      = X'0414000'
HRB_Q_CODE(1)   = HRB_PCU
HRB_Q_NR(1)     = X'00000021'
HRB_REQ_MODE    = HRB_MODE_ID
HRB_RANGE_VALUE = X'00000014'
Load or link CBDMGHOM with: (HRB,0,0,0,0)
 …
HRB_SDESC       = HRB_SDESC_C
HRB_LENGTH      = length-of-HRB
HRB_USE_IODF    = IODF-name
HRB_FUNCTION    = HRB_DGET
HRB_OBJ_CODE    = HRB_DATA
Load or link CBDMGHOM with: (HRB,0,0,DVI-address,DVI-length)
```

```
 ….
HRB_SDESC       = HRB_SDESC_C
HRB_LENGTH      = length-of-HRB
HRB_USE_IODF    = IODF-name
HRB_FUNCTION    = HRB_MGET
HRB_OBJ_CODE    = HRB_MESSAGE
Load or link CBDMGHOM with: (HRB,0,0,MSI-address,MSI-length)
 …
HRB_SDESC       = HRB_SDESC_C
HRB_LENGTH      = length-of-HRB
HRB_USE_IODF    = IODF-name
HRB_FUNCTION    = HRB_CLOSE
HRB_OBJ_CODE    = HRB_IODF
Load or link CBDMGHOM with: (HRB,0,0,0,0)
 …
HRB_SDESC       = HRB_SDESC_C
HRB_LENGTH      = length-of-HRB
HRB_FUNCTION    = HRB_TERMINATE
HRB_OBJ_CODE    = HRB_HCD
Load or link CBDMGHOM with: (HRB,0,0,0,0)
 …
```

Return codes

On return, HRB_RETURN_CODE in the request block HRB contains the severity of an error:

- HRB_SEVERE indicates that processing has been terminated and a new setup is required. Issue HCD_MGET to retrieve the messages describing the error.
- HRB_SYNTAX indicates that the request was given to the API in an incorrect syntax and therefore, the request has not been processed.
- HRB_WARNING and HRB_ERROR are given for the remaining errors. Issue HCD_MGET to retrieve the messages describing the error.
- HRB_OK tells you that no problems occurred.

Reason codes

HRB_REASON_CODE in the request block HRB specifies the error in more detail.

End of Programming Interface information

Appendix E. Establishing the host communication

To communicate with HCD from an HCM client on your workstation, you must set up the host communication depending on your operating system:

- For information regarding z/OS, refer to "Setting up TCP/IP definitions for z/OS" on page 417. It is recommended to encrypt the host communication, refer to "Encrypting the host communication for z/OS" on page 421.
- For information regarding z/VM, refer to information unit *Setting up TCP/IP definitions for z/VM* in *z/OS and z/VM HCM User's Guide*.

The host communication is also used when communicating between different HCD systems, for example, for tasks like HMC-wide activation.

Setting up TCP/IP definitions for z/OS

To communicate with HCD from an HCM client or from another HCD program, a server program running on the host is required. The server program is a TCP/IP program that listens for incoming remote HCD requests on a specific TCP/IP port. These HCD requests are passed to HCD to be executed. The server program - called HCD agent - must be started before HCD requests are passed. The HCD agent (communicating with the HCD server) is started by a daemon program (HCD dispatcher) as soon as a remote HCD login request has been issued. This HCD dispatcher program must be started before the first remote HCD login request is issued.

The following picture provides an overview of the structure and illustrates the relations between the HCD client, HCD dispatcher, and the HCD agent.

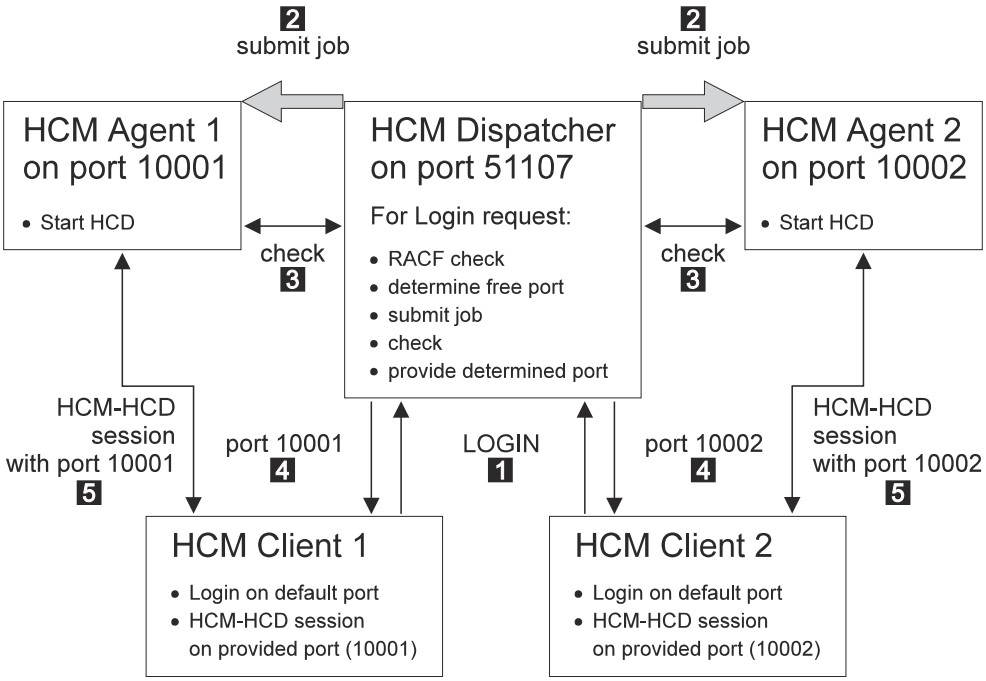

Figure 350. Relationship between HCD client, HCD dispatcher, and HCD agent

The HCD dispatcher listens on a specific TCP/IP port and waits for incoming remote HCD login requests. For each remote HCD login request 1, the HCD dispatcher checks the passed user ID and password for correctness. If user ID and password are correct, the HCD dispatcher looks for a free IP port. Then it starts an HCD agent program (HCD server program) which listens to remote HCD requests on that

© Copyright IBM Corp. 1994, 2022

particular IP port 2. As soon as the HCD agent is started and ready 3, the HCD dispatcher passes the particular IP port to the HCD client 4. The HCD client then closes the session to the HCD dispatcher and starts a session to the started HCD agent using the passed IP port 5. As soon as the HCD client has connected the HCD agent, the HCD dispatcher is free again to wait for other incoming remote HCD login requests on its IP port. As soon as HCD terminates the HCD client server connection, the HCD agent is terminated and the used port is freed again.

The advantage of having an HCD dispatcher which waits permanently on a specific port for incoming HCD login requests is, that each remote HCD user performs a login request to a fixed port ID and does not have to specify a particular job input to start the HCD server. This means, that all remote HCD users automatically have the same setup, and that this has only to be done once. As the HCD dispatcher is always running, all remote HCD users always use the same IP port for the login request.

The TCP/IP port for the remote HCD login requests is determined when the HCD dispatcher is started. If during the start of the HCD dispatcher nothing special is specified, the default TCP/IP port number is 51107. This number is also the default port number which is used by HCD for a login request if no port is specified.

The HCD dispatcher creates a job out of a skeleton and submits this job to start the HCD agent (for an example of the job skeleton, see "Skeleton used to start the HCD agent" on page 419). After the HCD agent has been started and is running, the HCD client communicates with the HCD agent. The HCD client uses the same host name for the communication with the HCD agent as it has used for the login request to the HCD dispatcher. Therefore, the HCD agent must run on a system with the same host name as the HCD dispatcher. This fact might be especially important, if your system is within a parallel sysplex. In this case, you can specify the system on which the agent must run in the provided skeleton.

You can start the HCD dispatcher in two ways:

- Starting the HCD dispatcher as a started task by using the procedure CBDQDISP provided in the library SYS1.PROCLIB. Consider to start the HCD dispatcher automatically after IPL of your z/OS system (for example, by using System Automation). See "Starting the HCD dispatcher as a started task" on page 419 for an example on how to start the HCD dispatcher as a started task.
- Starting the HCD dispatcher by submitting a batch job. A sample of a job, which can be used to start the HCD dispatcher is provided as CBDQDISJ in 'SYS1.SAMPLIB'. Adapt this job, before you submit it.

If you do not want to accept the default port number, you can choose your own by changing the procedure or the sample job to start the HCD dispatcher. Inform the remote HCD users of the TCP/IP port for the login requests. The HCD client does not accept a port number 0 or port numbers higher than 65535.

Each HCD session needs its own dedicated server, and each active HCD server needs its own unique TCP/IP port number. The HCD dispatcher looks for a free port number in a specific range. As a default, a port number is chosen in the range of 10000 to 10010 for the server. It is possible to determine a different range for the ports to be chosen for the HCD agent during start of the HCD dispatcher.

The user ID under which the HCD dispatcher is running, as well as the user IDs used for working with remote HCD programs must have permission to use UNIX System Services. Note that superuser authority is not required, but a home directory is to be provided for these user IDs. For example, you can use `/u/`*`userid`* (where *userid* is your own user ID) as a home directory for the remote HCD user ID.

Depending on your general TCP/IP setup, it might be necessary that you include a DD statement for SYSTCPD for the HCD dispatcher and the HCD agent.

Controlling access to HCD services

To access the HCD services remotely on z/OS, a user needs to log on to the HCD dispatcher. The log-on is done with a user ID and password as defined to the external security manager, for example, IBM Security Server RACF. The user must have the same access rights as for using HCD directly in the operating system.

If the APPL class for the security product is active, a profile can be defined to allow only certain users to log on to the HCD dispatcher. You can manage access to the HCD application by profile CBDSERVE in the

APPL class. Users who are allowed to use HCD need READ access to this profile. Sample definitions for user HCDUSER for RACF look like:

```
RDEFINE APPL CBDSERVE UACC(NONE)
PERMIT CBDSERVE CLASS(APPL) ID(HCDUSER) ACCESS(READ)
```

For details about protecting applications see *z/OS Security Server RACF Security Administrator's Guide*.

Skeleton used to start the HCD agent

There is a sample of skeleton CBDQAJSK provided in SYS1.SAMPLIB. The HCD dispatcher uses this sample job to build up a job, which is submitted to start the HCD agent.

You can adapt this skeleton according to your installation needs. You can specify accounting information in the job card of the skeleton, if your installation requires accounting information. If your installation requires accounting information, and there is no accounting information specified in the skeleton, each HCM user must provide this information in the EEQHCM.INI file. For all other substitutable parameters, the HCD dispatcher provides default values, for example, &SYSUID..HCD.PROFILE and &SYSUID..HCM.TRACE as data set names for the HCD profile and the HCD trace data set for remote HCD sessions.

If you specify values for substitutable parameters, then these values are used and not the default values or values specified in the HCM user's EEQHCM.INI file, for example, an increased REGION size for the HCD agent.

Always check, whether you must adapt this skeleton for your environment regarding the JOBPARM SYSAFF parameter for JES2 or MAIN SYSTEM parameter for JES3. The job must be executed on the system with the system name specified during HCD client logging to the HCD dispatcher.

Furthermore, an HCM user can take this skeleton, make a copy of it, and specify values for personal needs. To use this private copy, the HCM user needs an entry in the EEQHCM.INI file to tell the HCD dispatcher not to use the default skeleton, but the user-specified skeleton.

Starting the HCD dispatcher as a started task

There is a procedure CBDQDISP provided in SYS1.PROCLIB, which you can use to start the HCD dispatcher as a started task.

You can create a new user ID or use an existing one to be associated with the task of the HCD dispatcher. This user ID has to have permission to use UNIX System Services.

After the procedure has been adapted to your installation needs, you can start it by using the start command. Start the HCD dispatcher always after the system has been IPLed. You can also start the HCD dispatcher automatically using System Automation for z/OS.

You can change the following parameters in the procedure:

Job name

The HCD dispatcher submits a job for each incoming remote HCD login request. As a default, the job name of this job starts with CBD. If you want the job names to start with something different than CBD, you can specify a different string for the beginning of the job name by setting the JNP variable. If you want the job name to contain the user ID of the remote HCD user, specify +U and the HCD dispatcher substitutes the +U with the requestor's user ID. You can also add a prefix to the user ID or append a string to the user ID. For example, a X+UY for a passed user ID BMGN would result in XBMGNY for the beginning of the job name. Note, the HCD dispatcher does not accept more than seven digits for the beginning of a job name. Strings longer than seven digits are truncated. The HCD dispatcher generates a job name using the JNP variable and fills it up to eight digits. If the JNP variable contains three digits, the job name is filled up to eight digits by using parts of the port address of the HCD dispatcher and parts of the port address of the HCD client, which are started. If the JNP variable does not have three digits, it is filled up to eight digits by using 0...9 and A...Z.

Logging information
For special cases (debugging or better control), the HCD dispatcher can write logging information into a data set. In this case, change the LOG variable.

Port
If there is any reason to use another port than 51107 on which the HCD dispatcher listens for incoming remote HCD login requests, you can specify your port by setting the PORT variable.

Skeleton
You can specify another skeleton to be used to start the HCD agent by changing the JSK variable.

Port range
It is possible to determine a different range for the ports chosen by the HCD dispatcher for communication with the HCD agent during start of the dispatcher. The port range used must be configured to be available and permitted to the HCD agent. Set the variables P0 and P1 to appropriate values. Note that ports bigger than 65535 are not allowed.

Creating a user ID

If you want to run the HCD dispatcher as a started task, you must create a user ID for it.

1. Create a user ID to be used as started task for the procedure CBDQDISP. This user ID must have permission for running UNIX System Services.
2. Define the user ID to be used for the started task procedure CBDQDISP.
3. Refresh RACF.

The following figure shows a sample job in which the user ID for the HCD dispatcher can also be used by the UNIX System Services. (Note that the specified home directory for the HCD dispatcher is the root directory in this example).

```
//ADDUSER  EXEC PGM=IKJEFT01
…
//SYSIN    DD *
   AU CBDQDISP NAME('STARTED-T. M. GNIRSS') OWNER(STCGROUP) +
      DFLTGRP(STCGROUP) +
      OMVS(HOME(/) PROGRAM(/bin/sh) UID(4711))
//*
//DEFRACF  EXEC PGM=IKJEFT01
...
//SYSTSIN  DD *
   RDEF STARTED CBDQDISP.*  STDATA(USER(CBDQDISP)  GROUP(STCGROUP))
//*
//REFRESH  EXEC PGM=IKJEFT01
...
//SYSTSIN  DD *
   SETR REFRESH RACLIST(STARTED) GENCMD(*) GENERIC(*)
/*
```

Figure 351. Sample JCL for creating a user ID for UNIX System Services

Starting the HCD dispatcher as a batch job

You can either start the HCD dispatcher as a started task, or by submitting a batch job. For this purpose, you can use the sample job CBDQDISJ in SYS1.SAMPLIB and submit it after you have adapted it to your needs.

Stopping the HCD dispatcher

To stop the HCD dispatcher, use the **cancel** command. The **stop** command is not supported.

Define an HCD profile

HCM uses HCD on the host as its server. Thus you can define an HCD profile to tailor HCD supplied defaults and processing options to your installation needs. Using a profile is optional. The profile file data set must have the following characteristics:

- Be either a sequential or a member of a partitioned data set
- Have fixed length (80 bytes), fixed blocked record format

For more information, see "Defining an HCD profile" on page 16.

Allocate the HCD trace data set for remote HCD sessions

Before you can start an HCD agent (HCD server) on the host, you must allocate a data set that is used by this HCD agent's trace facility. This trace data set must have a different name than the standard HCD trace data set (which is called *userid*.HCD.TRACE), allowing you to use remote HCD programs concurrently. The recommended name for the HCD agent trace data set is *userid*.HCD.TRACE.

The following job can be used to allocate the trace data set.

```
//ALLOC   JOB (DE03141,,),'GNIRSS',CLASS=A,MSGCLASS=H,MSGLEVEL=(1,1)
//*
//STEP1    EXEC PGM=IEFBR14
//DUMMY    DD DSN=WAS.HCD.TRACE,
//         DCB=(RECFM=FB,LRECL=80,BLKSIZE=6160),
//         SPACE=(CYL,(5,20)),DISP=(NEW,CATLG),UNIT=SYSALLDA
//
```

Figure 352. Sample job for trace data set allocation

Verifying TCP/IP host communication

If you cannot establish a connection to the host, first check whether you specified the correct host name in the remote HCD login dialog. If the host name is correct, use the **ping** command to check the network accessibility. In a command prompt window, enter the following command:

`ping <hostname>`

where `<hostname>` is your remote HCD host name.

If the ping command reports an error, make sure you can reach your TCP/IP name server. Enter the following command:

`ping <nameserver>`

where `<nameserver>` is your name server's IP address in dotted-decimal notation (for example, 9.164.182.32). If this ping command also reports an error, make sure that you specified the correct IP address for the name server (provided by your network administrator) in your Windows TCP/IP configuration notebook. If you specified the name server IP address correctly, contact your network administrator to verify that all your TCP/IP configuration parameters are correct (router IP address, subnet mask, your workstation's IP address).

Encrypting the host communication for z/OS

After you have successfully set up TCP/IP definitions for your operating system, it is recommended to encrypt the host communication. You can follow the steps:

- Set up the secure communication for the host.
- Set up the secure communication for the workstation.

However, if you do not want to encrypt the host communication, you can skip these steps.

Set up secure communication for the host

This topic describes how to enable secure communication with the host using Application Transparent - Transport Layer Security (AT-TLS).

Note: Using AT-TLS to secure communication with the host affects all clients. If AT-TLS is used to enable secure communication with the host, all clients must use TLS to protect communication with the host. Unprotected connections to the server will no longer be allowed.

Before you can start with the server setup, you must enable the z/OS Communications Server Policy Agent for AT-TLS. Information about setting up AT-TLS communication is provided in the *z/OS Communications Server: IP Configuration Guide*.

The user ID who started the dispatcher and the user ID connecting to the dispatcher program (for example: HCM client user) must have UPDATE access to the key ring. Consider using the following command to grant a user ID the UPDATE access to the key ring HCDKEYRING, which is owned by id CBDQDISP. The following example uses a RACF key ring. The key ring must contain a valid default certificate. The user ID who starts the dispatcher program must have access to the key ring.

```
PERMIT CBDQDISP.HCDKEYRING.LST CL(RDATALIB) ID(userId)
ACCESS(UPDATE)SETROPTS RACLIST(RDATALIB) REFRESH
```

The fully qualified resource, CBDQDISP.HCDKEYRING.LST was defined in RDATALIB to allow granular access to the keyring. For example, read access allows a user Id to see in the Keyring, while update access allows it to see the private key within.

```
##################################################################
# HCD Dispatcher - server rule                                   #
##################################################################

TTLSRule                       HCD_Dispatcher
{
  LocalPortRange                 51107 # Dispatcher port
  Direction                      Inbound
  Priority                       20
  TTLSGroupActionRef             grp_Production # enable TTLS
  TTLSEnvironmentActionRef       HCD_Disp
}

TTLSEnvironmentAction            HCD_Disp
{
  HandshakeRole                   Server
  TTLSKeyRingParms
  {
    Keyring                       <your key ring name>
  }
  TTLSEnvironmentAdvancedParmsRef HCD_EnvAdvParms
}

##################################################################
# HCM Agents - server rule                                       #
##################################################################
TTLSRule                      HCD_Agents
{
   LocalPortRange                 10000-10010 # agents ports
   Jobname                        CBD*
   Direction                      Inbound
   Priority                       20
   TTLSGroupActionRef             grp_Production # enable TTLS
   TTLSEnvironmentActionRef       HCD_Agt
}
TTLSEnvironmentAction            HCD_Agt
{
   HandshakeRole                  Server
   TTLSKeyRingParms
   {
     Keyring                      <your key ring name>
   }
   TTLSEnvironmentAdvancedParmsRef HCD_EnvAdvParms
}

##################################################################
# HCD Dispatcher - client rule                                   #
##################################################################

TTLSRule              HCD_Dispatcher_As_Client
{
    RemotePortRange                 10000-10010 # Agent server port
    Jobname                         CBD*
    Direction                       Outbound
    Priority                        20
    TTLSGroupActionRef              grp_Production # enable TTLS
    TTLSEnvironmentActionRef        HCD_Disp_As_Client
}
```

```
TTLSEnvironmentAction       HCD_Disp_As_Client
{
    HandshakeRole                   Client
    TTLSKeyRingParms
    {
      Keyring                       <your key ring name>
    }
    TTLSEnvironmentAdvancedParmsRef HCD_EnvAdvParms
}

##################################################################
# common HCD rules                                               #
##################################################################


TTLSEnvironmentAdvancedParms    HCD_EnvAdvParms
{
    SSLV2           Off     # No SSLv2 connections (Default is Off)
    SSLV3           Off     # No SSLv3 connections (Default is Off)
    TLSV1           Off     # No TLS 1.0 connections (Default is ON)
    TLSV1.1         Off     # Allow TLSv1.1 connections (Default is ON)
    TLSv1.2         ON      # Allow TLSv1.2 connections (Default is Off)
}
 TTLSGroupAction grp_Production
 {
    TTLSEnabled     On
    Trace           3
 }
```

After you have completed your Policy Agent configuration, use the REFRESH command to refresh the Policy Agent configuration.

```
MODIFY PAGENT,REFRESH
```

TTLSRule: LocalPortRange
For server rules, this is the local port the application is listening on. 51107 is the listening port of the dispatcher and the agents listen on ports 10000-10010.

TTLSRule: RemotePortRange
The remote port the application must be connecting to for this rule's action to be performed. 51107 is the listening port of the dispatcher and the agents listen on ports 10000-10010.

TTLSRule: Jobname
The Jobname value specifies the job name of an application. Here CBDQDISP is the job name of the dispatcher. In general, the agents are named CBD&port_number. This parameter will filter away any traffic not involved with the HCD dispatcher, or dispatched servers that have CBD* as the prefix of their jobnames.

TTLSRule: Direction
Specifies the direction the connection must be initiated from for this rule's action to be performed. In this example, Inbound is specified for server rules, which means that the rule applies to connection requests that arrive inbound to the local host. Outbound is specified for client rules, which means the rule applies to connection requests initiated from the listening port of the dispatcher to the listening ports of the agents.

TTLSEnvironmentAction: HandshakeRole
Specifies the TLS handshake role to be taken for connections in this AT-TLS environment. In this example, Server is specified for the dispatcher's listening port, which means that the TLS handshake is performed as a server for inbound connections to that port. For outbound connections from the dispatcher to the agent ports, Client is specified for the handshake role which means that the TLS handshake is performed as a client.

TTLSKeyringParms: Keyring
Specifies the path and file name of the key database z/OS®UNIX file, the ring name of the SAF key ring, or the name of the z/OS PKCS #11 token. In this example, where <your key ring name> is the name of you SAF key ring.

TTLSGroupAction: TTLSEnabled
Indicates whether a selected connection should use AT-TLS security. For the dispatcher and agents, On is specified, which means the connections should use AT-TLS security.

TTLSEnvironmentAdvancedParms:SSL2

TTLSEnvironmentAdvancedParms:SSL3

TTLSEnvironmentAdvancedParms:TLSv1

TTLSEnvironmentAdvancedParms:TLSv1.1

TTLSEnvironmentAdvancedParms:TLSv1.2

Specify advanced attributes for an AT-TLS environment. HCM supports TLSv1.1 and TLSv1.2. If On is specified for TLSv1.1 and TLSv1.2, the actual protocol version used will be negotiated to the highest version mutually supported by HCM and the host. Off should be specified for SSL2, SSL3 and TLSv1. It is very important to set the proper TLS level for your environment.

Set up secure communication for the workstation

The TLS protocol normally requires a server to supply a digital certificate to a client. The client will validate the server certificate by checking the trusted root CA in its own key data base. The client can then use the server's public key from the certificate during the rest of the TLS handshake. This process is called "TLS server authentication" and its use is required. If the server authentication process fails, the TLS handshake is immediately terminated and the connection fails. Make sure that the server's root CA certificate is installed in Trusted Root Certification Authorities list on your workstation, so that Windows will automatically trust the host's certificate authority. If the root certificate is not installed in Trusted Root CA list, you can:

1. Obtain the root certificate that the host uses.
2. Follow Microsoft's documentation for the Microsoft Management Console (MMC) to:
   a. Enable the Certificates snap-in.
   b. Import the root certificate into Trusted Root CA.

TCP/IP problem determination

If a user connects to HCD via HCM, HCM displays error messages if the TCP/IP connection fails. For information about error messages, refer to *z/OS and z/VM HCM User's Guide*. You can also check for documentation updates in *HCM Documentation* under *Product Updates* provided on the HCD and HCM home page (www.ibm.com/systems/z/os/zos/features/hcm).

If you connect to HCD via another HCD instance, HCD displays an error message on the screen or in the HCD message log.

If you get messages that are not listed in *z/OS and z/VM HCM User's Guide* or in *z/OS and z/VM HCD Messages*, inform IBM and provide the complete and exact message text (especially the internal description and the error stack information). If possible, make a screenshot of the message and provide information about the circumstances that caused the message.

Appendix F. Accessibility

Accessible publications for this product are offered through IBM Documentation (www.ibm.com/docs/en/zos).

If you experience difficulty with the accessibility of any z/OS information, send a detailed message to the Contact the z/OS team web page (www.ibm.com/systems/campaignmail/z/zos/contact_z) or use the following mailing address.

IBM Corporation
Attention: MHVRCFS Reader Comments
Department H6MA, Building 707
2455 South Road
Poughkeepsie, NY 12601-5400
United States

© Copyright IBM Corp. 1994, 2022

Notices

This information was developed for products and services that are offered in the USA or elsewhere.

IBM may not offer the products, services, or features discussed in this document in other countries. Consult your local IBM representative for information on the products and services currently available in your area. Any reference to an IBM product, program, or service is not intended to state or imply that only that IBM product, program, or service may be used. Any functionally equivalent product, program, or service that does not infringe any IBM intellectual property right may be used instead. However, it is the user's responsibility to evaluate and verify the operation of any non-IBM product, program, or service.

IBM may have patents or pending patent applications covering subject matter described in this document. The furnishing of this document does not grant you any license to these patents. You can send license inquiries, in writing, to:

IBM Director of Licensing
IBM Corporation
North Castle Drive, MD-NC119
Armonk, NY 10504-1785
United States of America

For license inquiries regarding double-byte character set (DBCS) information, contact the IBM Intellectual Property Department in your country or send inquiries, in writing, to:

Intellectual Property Licensing
Legal and Intellectual Property Law
IBM Japan Ltd.
19-21, Nihonbashi-Hakozakicho, Chuo-ku
Tokyo 103-8510, Japan

The following paragraph does not apply to the United Kingdom or any other country where such provisions are inconsistent with local law: INTERNATIONAL BUSINESS MACHINES CORPORATION PROVIDES THIS PUBLICATION "AS IS" WITHOUT WARRANTY OF ANY KIND, EITHER EXPRESS OR IMPLIED, INCLUDING, BUT NOT LIMITED TO, THE IMPLIED WARRANTIES OF NON-INFRINGEMENT, MERCHANTABILITY OR FITNESS FOR A PARTICULAR PURPOSE. Some states do not allow disclaimer of express or implied warranties in certain transactions, therefore, this statement may not apply to you.

This information could include technical inaccuracies or typographical errors. Changes are periodically made to the information herein; these changes will be incorporated in new editions of the publication. IBM may make improvements and/or changes in the product(s) and/or the program(s) described in this publication at any time without notice.

This information could include missing, incorrect, or broken hyperlinks. Hyperlinks are maintained in only the HTML plug-in output for IBM Documentation. Use of hyperlinks in other output formats of this information is at your own risk.

Any references in this information to non-IBM websites are provided for convenience only and do not in any manner serve as an endorsement of those websites. The materials at those websites are not part of the materials for this IBM product and use of those websites is at your own risk.

IBM may use or distribute any of the information you supply in any way it believes appropriate without incurring any obligation to you.

Licensees of this program who wish to have information about it for the purpose of enabling: (i) the exchange of information between independently created programs and other programs (including this one) and (ii) the mutual use of the information which has been exchanged, should contact:

IBM Corporation
Site Counsel
2455 South Road

© Copyright IBM Corp. 1994, 2022

Poughkeepsie, NY 12601-5400
USA

Such information may be available, subject to appropriate terms and conditions, including in some cases, payment of a fee.

The licensed program described in this document and all licensed material available for it are provided by IBM under terms of the IBM Customer Agreement, IBM International Program License Agreement or any equivalent agreement between us.

Any performance data contained herein was determined in a controlled environment. Therefore, the results obtained in other operating environments may vary significantly. Some measurements may have been made on development-level systems and there is no guarantee that these measurements will be the same on generally available systems. Furthermore, some measurements may have been estimated through extrapolation. Actual results may vary. Users of this document should verify the applicable data for their specific environment.

Information concerning non-IBM products was obtained from the suppliers of those products, their published announcements or other publicly available sources. IBM has not tested those products and cannot confirm the accuracy of performance, compatibility or any other claims related to non-IBM products. Questions on the capabilities of non-IBM products should be addressed to the suppliers of those products.

All statements regarding IBM's future direction or intent are subject to change or withdrawal without notice, and represent goals and objectives only.

This information contains examples of data and reports used in daily business operations. To illustrate them as completely as possible, the examples include the names of individuals, companies, brands, and products. All of these names are fictitious and any similarity to the names and addresses used by an actual business enterprise is entirely coincidental.

COPYRIGHT LICENSE:

This information contains sample application programs in source language, which illustrate programming techniques on various operating platforms. You may copy, modify, and distribute these sample programs in any form without payment to IBM, for the purposes of developing, using, marketing or distributing application programs conforming to the application programming interface for the operating platform for which the sample programs are written. These examples have not been thoroughly tested under all conditions. IBM, therefore, cannot guarantee or imply reliability, serviceability, or function of these programs. The sample programs are provided "AS IS", without warranty of any kind. IBM shall not be liable for any damages arising out of your use of the sample programs.

Terms and conditions for product documentation

Permissions for the use of these publications are granted subject to the following terms and conditions.

Applicability

These terms and conditions are in addition to any terms of use for the IBM website.

Personal use

You may reproduce these publications for your personal, noncommercial use provided that all proprietary notices are preserved. You may not distribute, display or make derivative work of these publications, or any portion thereof, without the express consent of IBM.

Commercial use

You may reproduce, distribute and display these publications solely within your enterprise provided that all proprietary notices are preserved. You may not make derivative works of these publications, or

reproduce, distribute or display these publications or any portion thereof outside your enterprise, without the express consent of IBM.

Rights

Except as expressly granted in this permission, no other permissions, licenses or rights are granted, either express or implied, to the publications or any information, data, software or other intellectual property contained therein.

IBM reserves the right to withdraw the permissions granted herein whenever, in its discretion, the use of the publications is detrimental to its interest or, as determined by IBM, the above instructions are not being properly followed.

You may not download, export or re-export this information except in full compliance with all applicable laws and regulations, including all United States export laws and regulations.

IBM MAKES NO GUARANTEE ABOUT THE CONTENT OF THESE PUBLICATIONS. THE PUBLICATIONS ARE PROVIDED "AS-IS" AND WITHOUT WARRANTY OF ANY KIND, EITHER EXPRESSED OR IMPLIED, INCLUDING BUT NOT LIMITED TO IMPLIED WARRANTIES OF MERCHANTABILITY, NON-INFRINGEMENT, AND FITNESS FOR A PARTICULAR PURPOSE.

IBM Online Privacy Statement

IBM Software products, including software as a service solutions, ("Software Offerings") may use cookies or other technologies to collect product usage information, to help improve the end user experience, to tailor interactions with the end user, or for other purposes. In many cases no personally identifiable information is collected by the Software Offerings. Some of our Software Offerings can help enable you to collect personally identifiable information. If this Software Offering uses cookies to collect personally identifiable information, specific information about this offering's use of cookies is set forth below.

Depending upon the configurations deployed, this Software Offering may use session cookies that collect each user's name, email address, phone number, or other personally identifiable information for purposes of enhanced user usability and single sign-on configuration. These cookies can be disabled, but disabling them will also eliminate the functionality they enable.

If the configurations deployed for this Software Offering provide you as customer the ability to collect personally identifiable information from end users via cookies and other technologies, you should seek your own legal advice about any laws applicable to such data collection, including any requirements for notice and consent.

For more information about the use of various technologies, including cookies, for these purposes, see IBM's Privacy Policy at ibm.com®/privacy and IBM's Online Privacy Statement at ibm.com/privacy/details in the section entitled "Cookies, Web Beacons and Other Technologies," and the "IBM Software Products and Software-as-a-Service Privacy Statement" at ibm.com/software/info/product-privacy.

Policy for unsupported hardware

Various z/OS elements, such as DFSMSdfp, JES2, JES3, and MVS, contain code that supports specific hardware servers or devices. In some cases, this device-related element support remains in the product even after the hardware devices pass their announced End of Service date. z/OS may continue to service element code; however, it will not provide service related to unsupported hardware devices. Software problems related to these devices will not be accepted for service, and current service activity will cease if a problem is determined to be associated with out-of-support devices. In such cases, fixes will not be issued.

Minimum supported hardware

The minimum supported hardware for z/OS releases identified in z/OS announcements can subsequently change when service for particular servers or devices is withdrawn. Likewise, the levels of other software products supported on a particular release of z/OS are subject to the service support lifecycle of those

products. Therefore, z/OS and its product publications (for example, panels, samples, messages, and product documentation) can include references to hardware and software that is no longer supported.

- For information about software support lifecycle, see: IBM Lifecycle Support for z/OS (www.ibm.com/software/support/systemsz/lifecycle)
- For information about currently-supported IBM hardware, contact your IBM representative.

Trademarks

IBM, the IBM logo, and ibm.com are trademarks or registered trademarks of International Business Machines Corp., registered in many jurisdictions worldwide. Other product and service names might be trademarks of IBM or other companies. A current list of IBM trademarks is available on the Web at Copyright and Trademark information (www.ibm.com/legal/copytrade.shtml).

Programming interface information

This guide primarily documents information that is NOT intended to be used as a Programming Interface of Hardware Configuration Definition (HCD).

This information unit also documents intended Programming Interfaces that allow the customer to write programs to obtain the services of HCD. This information is identified where it occurs, either by an introductory statement to a topic or by the following marking:

Programming Interface Information

End Programming Interface Information

© Copyright IBM Corp. 1994, 2022

Glossary

This glossary defines technical terms and abbreviations used in the Hardware Configuration Definition (HCD) documentation.

Activity log
The activity log is a sequential data set with the name of the associated **IODF** and the suffix ACTLOG. Use the activity log to document all definitions you made to the current IODF using HCD.

Base
Base is the base device number of a **multiple exposure** device, which is accessible by more than one device number. You assign the first device number and the system generates the additional device numbers.

Central processor complex (CPC)
A physical collection of hardware that consists of central storage, one or more central processors, timers, and channels.

CFReport
When a machine is ordered, the output of the order process is a binary file that represents the physical description of the final machine. One of the components of that file is the type and physical location, including the Physical Channel Identifier (PCHID) value assigned to that location, of all the I/O features in the final machine. This file is called a CFReport.

Change log
The change log is a VSAM data set with the name of the associated **IODF** and the suffix CHLOG. It will be automatically created if change logging and automatic activity logging is active. A subset of its generated entries will then be used to create the activity log entries.

Channel subsystem (CSS)
A collection of subchannels that directs the flow of information between I/O devices and main storage. It uses one ore more channel paths as the communication link in managing the flow of information to or from I/O devices. Within the CSS is one subchannel set and logical partitions. One subchannel from the set is provided for and dedicated to each I/O device accessible to the CSS. Logical partitions use subchannels to communicate with I/O devices. The maximum number of CSSs supported by a processor also depends on the processor type. If more than one CSS is supported by a processor, each CSS has a processor unique single hexadecimal digit CSS identifier (CSS ID).

CHPID
A logical processor contains a number of *CHPIDs*, or Channel Path IDs, which are the logical equivalent of channels in the physical processor. See also:

- *dedicated CHPID*
- *reconfigurable CHPID*
- *shared CHPID*
- *spanned CHPID*

CHPID Mapping Tool
The CHPID Mapping Tool aids the customer in developing a CHPID-to-PCHID relationship for XMP processors. It accepts an IOCP input file without PCHID values, allows the user to assign the logical CHPID values in the input to the PCHIDs available with his ordered machine, and returns an updated IOCP input file that contains the PCHID values.

CIB
Coupling over InfiniBand. A channel path type to exploit InfiniBand technology for coupling connections.

CMT
See *CHPID Mapping Tool*.

© Copyright IBM Corp. 1994, 2022

Coupling Facility (CF)
The hardware element that provides high-speed caching, list processing, and locking functions in a sysplex. To enable data sharing between a CF partition and the central processor complexes, special types of high-speed, CF channels are required to provide the connectivity. A receiving CF channel path, attached to a CF partition, is to be connected to a sending CF channel path, attached to a partition in which an operating system (OS) is running.

Coupling Facility Channel
A high bandwidth fiber optic channel that provides the high-speed connectivity required for data sharing between a coupling facility and the central processor complexes directly attached to it.

CSS
See *channel subsystem*.

Dedicated CHPID
A CHPID can be *dedicated* to one partition; only that partition can access I/O devices on this CHPID. All CHPID types can operate in DED (dedicated) mode.

D/R site OS configuration
HCD can automatically generate a D/R site OS configuration as a copy of the primary OS configuration. You need a D/R site OS configuration in a GDPS managed environment, where storage devices are mirrored over peer-to-peer remote copy (PPRC) connections in order to have a backup system defined for an emergency situation.

Dynamic reconfiguration
The ability to make changes to the channel subsystem and to the operating system while the system is running.

EDT
An EDT (eligible device table) is an installation-defined and named representation of the devices that are eligible for allocation. The EDT defines the **esoteric** and **generic** relationship of these devices. During IPL, the installation identifies the EDT that the operating system uses. After IPL, jobs can request device allocation from any of the esoteric device groups assigned to the selected EDT. An EDT is identified by a unique ID (two digits), and contains one or more esoterics and generics. Define at least one EDT for each operating system configuration.

Esoteric
Esoteric (or esoteric device group) is an installation-defined and named grouping of I/O devices of usually the same device group. **EDTs** define the esoteric and generic relationship of these devices. The name you assign to an esoteric is used in the JCL DD statement. The job then allocates a device from that group instead of a specific device number or **generic** device group.

FICON
Fiber Connection Environment (FICON) is an improved optical fiber communication method offering channels with high data rate, high bandwidth, increased distance and a greater number of devices per control unit for S/390® systems.

Generic
Generic (or generic device type) is an MVS-defined grouping of devices with similar characteristics. For example: the device types 3270-X, 3277-2, 3278-2, -2A, -3, -4, and 3279-2a, -2b, -2c, -3a, -3b belong to the same generic. Every generic has a generic name that is used for device allocation in the JCL DD statement. MVS interprets this name as "take any device in that group". In an operating system configuration, each **EDT** has the same list of generics. This list can only vary by the **preference** values and **VIO** indicators that are assigned to the generics.

HCA
With Coupling over InfiniBand, a peer coupling link is emulated on a Host Communication Adapter (HCA). See also *CIB*.

HCPRIO data set
The data set containing a real I/O configuration of a VM system.

Hardware Management Console
A console used to monitor and control hardware such as the systems of a CPC.

IOCDS
An input/output configuration data set (IOCDS) contains different configuration definitions for the selected processor. Only one IOCDS is used at a time. The IOCDS contains I/O configuration data on the files associated with the processor controller on the host processor, as it is used by the channel subsystem. The CSS uses the configuration data to control I/O requests. The IOCDS is built from the production **IODF.**

I/O Cluster
An I/O cluster is a sysplex that owns a managed channel path for an LPAR processor configuration.

IOCP
An IOCP (I/O configuration program) is the hardware utility that defines the hardware I/O configuration to the channel subsystem. For this definition IOCP retrieves information from the IOCP input data set about the following: the channel paths in the processor complex, control units attached to the channel paths, and I/O devices assigned to the control unit. HCD users can build the IOCP input data set from a production IODF.

IODF
An IODF (input/output definition file) is a VSAM linear data set that contains I/O definition information. This information includes processor I/O definitions (formerly specified by **IOCP** input streams) and operating system I/O definitions (formerly specified by **MVSCP** input streams). A single IODF can contain several processor and several operating system I/O definitions. See also "Master IODF" on page 437.

Initial program load (IPL)
The process that loads the system programs from the auxiliary storage, checks the system hardware, and prepares the system for user operations.

LCSS
Logical channel subsystems. See also *channel subsystem*.

Local system name
When defining an XMP processor, you can specify an optional local CPC designator. If you do not specify a local system name, and a CPC name is given, the local system name defaults to the CPC name.

Logical control unit
A logical control unit (LCU) can be a single CU with or without attached devices or a group of one or more CUs that share devices. In a channel subsystem, a logical CU represents a set of CUs that physically or logically attach I/O devices in common. A logical CU is built from the information specified in the CU definitions. The physical CUs the device is attached to form part of a logical CU.

Logically partitioned (LPAR) mode
A central processor complex (CPC) power-on reset mode that enables use of the PR/SM feature and allows an operator to allocate CPC hardware resources (including central processors, central storage, expanded storage, and channel paths) among logical partitions. Contrast with *basic mode*.

Master configuration file (MCF)
The HCM master configuration file (MCF) is an HCM configuration stored on the host. It provides a central shared repository, allowing several HCD/HCM users to work on a single configuration cooperatively and safely.

Master IODF
A master IODF is a centrally kept IODF containing I/O definitions for several systems or even for a complete enterprise structure. Master IODFs help to maintain consistent I/O data within a system and can provide comprehensive reports. From the master IODF subset IODF may be generated to serve as production IODFs for particular systems within the structure.

MCF
See *master configuration file*.

Migration
Refers to activities that relate to the installation of a new version or release of a program to replace an earlier level. Completion of these activities ensures that the applications and resources on your system will function correctly at the new level.

Multiple Image Facility (MIF)
A facility that allows channels to be shared among PR/SM logical partitions in a FICON environment.

Multiple exposure device
A multiple exposure device is allocated by a single device number, but accessed by several device numbers, whereby each device number represents one exposure. The device number by which the device is allocated is the **base** exposure; all other device numbers are called non-base exposures.

Multi-user access
Users can define the multi-user access attribute for IODFs so that multiple users can simultaneously update this IODF. An IODF is kept in exclusive update mode only for the duration of a single transaction. If the updates of the transaction are committed, another user may update the IODF without requiring the first user to release it. Though a user's changes are not immediately refreshed in the views of the other users, each user has a consistent view of the data either from the initial access to the IODF or after each last update that he had applied to the IODF.

MVS system
An MVS image together with its associated hardware, which collectively are often referred to simply as a system, or MVS system.

MVSCP
MVSCP (MVS configuration program) is the program that defines the I/O configuration to MVS. For this definition, information about devices, **EDTs,** and **NIP** consoles is required.

NIP console
A NIP (nucleus initialization program) console is a device that NIP uses as a console to display system messages. To define a device as a NIP console, it must first be defined to the channel subsystem and the current operating system (OS) configuration.

PCHID
See *physical channel identifier*.

PCIe
See *Peripheral Component Interconnect Express*.

Peer coupling channel
A peer coupling channel is a coupling channel operating in peer mode, which means it can be used as a sender and receiver at the same time. It may be shared by several logical OS partitions (such as CF sender channels) and by a CF logical partition. In addition, peer channels provide more buffer sets and channel bandwidth than their counterparts. Peer channels are supported only on zSeries 900 servers and their successors.

Peripheral Component Interconnect Express (PCIe)
Native attached PCIe adapters provide software with a connection to many new functions. The hardware implementation consists of a fanout card that plugs into the CEC book. It uses a PCIe interface to connect to a switch card that is plugged into an I/O drawer. Each switch card controls a domain of eight I/O or PCIe cards.

Physical channel identifier (PCHID)
The physical address of a channel path in the hardware. Logical CHPIDs have corresponding physical channels. Real I/O hardware is attached to a processor via physical channels. Channels have a physical channel identifier (PCHID) which determines the physical location of a channel in the processor. For XMP processors, the PCHIDs must be defined in the configuration. The PCHID is a three hexadecimal digit number and is assigned by the processor. One logical channel path (CHPID) provided by a channel subsystem may be associated with a physical channel (PCHID). There is no standard mapping between CHPIDs and PCHIDs. The CHPID Mapping Tool aids the customer in developing a CHPID-to-PCHID relationship. See also *CHPID Mapping Tool*.

peer-to-peer remote copy
Peer-to-peer remote copy (PPRC) connections are direct connections between DASD controller subsystems that provide a synchronous copy of a volume or disk for disaster recovery, device migration, and workload migration. These connections can be point-to-point from one DASD controller to another, or they may pass through switches, just as connections from CHPIDs to control units can.

PPRC
See peer-to-peer remote copy.

Preference value
Preference value is the value that is assigned to each **generic**. This value determines the sequence of allocation. The generics and the associated values are system-defined. The predefined order can be changed by means of the preference value.

processor cluster
A processor cluster is a configuration that consists of CPCs (central processor complexes), one or more Hardware Management Consoles, and may have one or more coupling facilities. The support elements that are attached to the CPCs are connected to a network. A Hardware Management Console connected to the same network allows the system operator to configure the CPCs, observe and control hardware operations, and perform software functions.

Processor Resource/Systems Manager (PR/SM)
The feature that allows the processor to use several OS images simultaneously and provides logical partitioning capability. See also *LPAR*.

Production IODF
The production IODF is used by MVS/IPL to build **UCBs** and **EDTs**. It is also used to build **IOCDSs** and IOCP input data sets. Several users can view a production IODF concurrently and make reports of it, but it cannot be modified. The production IODF that is used for IPL must be specified by a LOADxx member. The LOADxx member can reside either in SYS1.PARMLIB or SYSn.IPLPARM. If the LOADxx member resides in SYSn.IPLPARM, then SYSn.IPLPARM must reside on the IODF volume. If the LOADxx member resides in SYS1.PARMLIB, then SYS1.PARMLIB can reside on either the system residence (sysres) volume or the IODF volume.

Reconfigurable CHPID
A *reconfigurable CHPID* is an unshared CHPID that you can reconfigure offline from one partition, then online to another. That is, the CHPID can be reconfigured between logical partitions after a power-on reset. Only one partition can access I/O devices on this CHPID at a time. All CHPID types can operate in REC (reconfigurable) mode.

Server Time Protocol link
A coupling facility connection which will be used as a timing-only link, providing the Server Time Protocol (STP) function. The STP is a time synchronization feature, which is designed to provide the capability for multiple System z9® and zSeries servers to maintain time synchronization with each other. STP is designed to allow events occurring in different System z9 and zSeries servers to be properly sequenced in time.

Shared CHPID
A *shared CHPID* can be configured online to one or more partitions at the same time. One or more partitions can access I/O devices at the same time using this CHPID.

SMP processor
In this book, this term designates processors supporting a single channel subsystem. For SMP processors, the single channel subsystem is implicitly defined with the processor. This term is used in contrast to the term **XMP processor**, which designates processors supporting multiple logical channel subsystems.

SNA address
The system network architecture (SNA) address is a means to identify the support element of a CPC configured in a processor cluster. It consists of the network name (the network identifier of the LAN the support element of a CPC is connected to), and the system name (the identifier of the CPC within the network). In HCD, used as part of a processor definition for a CPC, the SNA address provides the association of a processor defined in the IODF with a CPC configured in a processor cluster.

Spanned CHPID
With XMP processors, supporting multiple logical channel subsystems, some types of channel paths can be shared across partitions from multiple logical channel subsystems. It is dependent on the processor support, which channel types can be defined as spanned. Such a channel path is called a ***spanned*** channel path.

A spanned channel path will be created with the same CHPID number in all channel subsystems that are using it. For example, if you have a processor MCSSPRO1 with channel subsystems 0 through 3, and you create CHPID 1A (type IQD, SPAN) and let it access partitions from CSS 0, 2, and 3, you will get this CHPID 1A in CSSs 0, 2, and 3, but not in CSS 1.

STP link
See Server Time Protocol link.

subchannel set
With a subchannel set you can define the placement of devices either relative to a channel subsystem or to an operating system. Depending on the processor type and the z/OS release, users can exploit additional subchannel sets in a channel subsystem.

This function relieves the constraint for the number of devices that can be accessed by an LPAR, because device numbers may be reused across all channel subsystems and subchannel sets. Depending on the machine implementation, the exploitation of the alternate subchannel sets is limited to certain device types.

Sysplex
A set of operating systems communicating and cooperating with each other through certain multisystem hardware components and software services to process customer workloads. See also *MVS system*.

UCB
Unit control block

UIM
UIMs (unit information modules) perform the device-dependent part of the operating system configuration definition. There is a UIM for each supported device or device group. Each UIM recognizes and processes the values coded for its device or device group. HCD routines load all UIMs, either IBM or customer supplied, into virtual storage and make calls to the UIMs:

- During initialization
- During processing of an Add device or Change device request
- During generation of a print report
- During IPL

Validated work IODF
A validated work IODF satisfies all validation rules for building production IODFs. It may lack physical channel identifiers (PCHIDs) for XMP processors. In cooperation with HCD and the CHPID Mapping Tool a validated work IODF is required to accept new or updated PCHIDs. From such a validated work IODF, an IOCP input deck suitable for the use with the CHPID Mapping Tool is generated. As soon as all PCHIDs are inserted or updated in the validated work IODF, the production IODF can be built.

VIO
VIO (virtual input/output) is the allocation of data sets that exist in paging storage only. Only DASDs are eligible for VIO. Data sets are allocated to a paging device instead of to a real device.

Virtual channel identifier (VCHID)
For internal channel paths there does not exist a physical correspondence to hardware, hence there does not exist a PCHID value. Instead, for internal reasons, a unique virtual channel ID (VCHID) is assigned during IML or after a dynamic “Add CHPID' request.

Work IODF
The work IODF is used to update an I/O definition and reflects the most recent status of the hardware configuration. After you have completed the updates, you can use the work IODF to create a production IODF. While you can update a work IODF and generate reports from it, it cannot be used to build **UCBs** and **EDTs**, nor can it be used to generate an **IOCDS**, or an **IOCP** input data set.

WWPN Prediction Tool
The worldwide port name (WWPN) prediction tool assists you with pre-planning of your Storage Area Network (SAN) environment. It assigns world-wide port names to virtualized FCP ports for configuring SAN devices. This stand alone tool is designed to allow you to set up your SAN in advance, so that you can be up and running much faster once the server is installed.

XMP processor

In the S/390 context, this term designates processors that support multiple logical channel subsystems (LCSS). It is used in contrast to the term SMP processor, which designates processors of previous generations that support only one channel subsystem. In general, the different CSSs including their channel paths and logical partitions provided by an XMP processor operate independently from each other. Channel paths can be spanned over multiple logical channel subsystems on the same processor depending on the channel path type. See also *SMP processor* and *channel subsystem*.

Index

Special Characters

*HCD 187
*$HCDC$ 187
>peer-to-peer remote copy 121
>PPRC 121

Numerics

4-character model 187
8-character control unit 187

A

abend code
    00F 388
    other than 00F 389
abnormal termination 388
access authority 321
access list 98
access to HCD services 418
accessibility
    contact IBM 425
action bar 49, 331
action code 53, 103, 331
action list 52
action-to-action processing 52
actions on objects, migration enhancements 273
activate
    IOCDS, batch 299
activate commands
    tracing 407
activate messages 201
activating
    configuration dynamically 195
    sysplex-wide 199
    trace 404
activation actions available from CPC Image List 206
active configuration
    action code 'a' 210
    action code 'c' 211
    action code 'g' 212
active IODF, view 195
active sysplex member list 199
activity log
    naming convention 30
Activity Log panel 45
activity logging
    automatic 20, 46
    browsing 232
    HCD profile 20
    printing 232
    rules 47
    volume serial number 19
Add Device
    peer-to-peer remote copy 121
    PPRC 121
adding
    configuration package object 43
    configuration packages 42
    device to esoteric device list, migration 277
    objects through migration 273
advantages of extended migration 249
agent 417
all-character readable token 187
ALLOC_SPACE 20
allocating output data sets
    volume serial number 19
allow hardware deletes 197
alter access 322
alternate DD names 319
analyze errors
    batch migration 248
    dialog migration 247
    HCD problems 387
API provided by HCD 411
application programming interface 411
assembler check, migration 247, 284
assembler statements 242
assembly listing 284
assigning devices to esoterics 74
assistive technologies 425
associated data sets 30
associated with processor and partition, migration 247
attended export 38
attribute group change 128
atttended mode 159
AUTO_CHPID_EXCLUDE 161
AUTO_CHPID_INCLUDE 161
AUTO_MATCH_CU_DEVNUM 161
AUTO_SS_ALTERNATE 161
AUTO_SS_DEVNUM_SCHEME 161
AUTO_SUG_CU_RANGE 162
AUTO_SUG_DEV_RANGE 162
AUTO_SUG_DYN_CHPIDS 163
AUTO_SUG_LPGROUP 163
AUTO_SUG_OSGROUP 163
AUTO_SUG_STAT_CHPIDS 162
AUTO_SWAD_EXCLUDE 163
AUTO_SWAD_INCLUDE 163
auto-assign 114
autoconfiguration
    overview 166
autoconfiguration operation mode
    attended mode 159
    fast-path mode 159
    unattended mode 159
autoconfiguration policies
    AUTO_CHPID_EXCLUDE 161
    AUTO_CHPID_INCLUDE 161
    AUTO_MATCH_CU_DEVNUM 161
    AUTO_SS_ALTERNATE 161
    AUTO_SS_DEVNUM_SCHEME 161
    AUTO_SUG_CU_RANGE 162

autoconfiguration policies *(continued)*
AUTO_SUG_DEV_RANGE 162
AUTO_SUG_DYN_CHPIDS 163
AUTO_SUG_LPGROUP 163
AUTO_SUG_OSGROUP 163
AUTO_SUG_STAT_CHPIDS 162
AUTO_SWAD_EXCLUDE 163
AUTO_SWAD_INCLUDE 163
changing between controller discoveries 163
autoconfiguration policy 160
autoconfigured control units 166
autoconfigured I/O devices 166
automatic activity logging
rules 47
automatic I/O configuration 159

B

back-level IODF 40
backup an IODF 35
base 435
base IODF 159
batch jobs
generated by HCD 64
batch utility
activate a production IODF 299
build configuration data 301
build CONFIGxx member 301
build IOCDS or IOCP input data set 297
build JES3 initialization stream checker data 301
build production IODF 295
build work IODF 296
compare IODFs or CSS/OS reports 310
copy IODF 303
create graphical configuration reports 307
description 289
example for copy IODF 317
example for migration 248
EXEC procedures 26
export IODF 315
FCP device data 301
functions 289
import IODF 314
initialize IODF 291
input parameter string 290
job steps during transmit procedure 397
migrate an input data set 248, 292
print configuration reports 304
starting the dialog 290
upgrade IODF 292
BCPii
working with CPC images 209
blocking ports 154
BookMaster 220
BOTTOM command 50
browse activity log 232
build
CONFIGxx member, dialog 212
CONFIGxx, batch 301
FCP device data, batch 301
HCPRIO input data set, batch 300
IOCDS, batch 297
IOCDS, dialog 179
IOCP input data set 187
build *(continued)*
IOCP input data set, batch 297
IOCP input data set, dialog 185
JES3, batch 301
OS configuration data set 192
processor cluster IOCDSs, dialog 181
production IODF, batch 249, 295
production IODF, dialog 176
work IODF, batch 296
build configuration statements 249

C

candidate list 99
cascade switching 143
cascaded FICON fabric 116
catalog
considerations 326
scan utility< 328
cataloged data set 327
CBDCHCD 15, 16
CBDMGHOM routine 411
centralized navigation 66
CF channel path, migration enhancements 264
CF duplexing 8
CFReport 190, 435
chained switches 143, 151
change log
naming convention 30
change log data set
allocation space extension 20
change log file
name 46
size 46
CHANGE_LOG 20
changing
channel path attributes, migration 277
channel paths 107
configuration packages 43
consoles 133
control unit and device attributes, migration 277
control unit attachment parameters for multiple processors 118
control units 116
coupling facility connection 110
CSS-related definitions for a group of devices 127
device number 130
devices 126
DYNAMIC parameter for a groupof devices 128
EDT ID 72
EDTs 72
esoterics 74
esoterics for a group of devices 127
IODF attributes 37
LOCANY parameter for a group of devices 128
operating mode of channel paths 109
operating system configuration 70
OS configuration ID 70
OS-related definitions for a group of devices 127
partition name, migration 277
partitions 88
ports from installed to uninstalled 152
ports from occupied to not occupied 153
processor 78

changing *(continued)*
processor ID 79
processor type 78
production IODF 35
switch configuration ID 155
switch configurations 148
switch data 148
switches 148
to another IODF 35
type of CF channel paths 108
type of channel paths 108
type/model of a group of devices 129
changing channel path ID 108
channel path
access list 98
aggregating 110
candidate list 99
changing 107
CHPID statement 263
compare report, example 379
connectivity report, example 344
defining 97
deleting 112
detail report, example 343
migration enhancement 263
operation mode 96
spanned 104
summary report, example 341
working with 96
channel path ID
changing 108
channel subsystem
changing 86
copy 83
copying 85
defining 82
deleting 86
channel subsystem summary report, example 338
CHID 98
CHID function
summary 339
CHLOG_EXTENSION 20
CHPID
spanned 104
CHPID Mapping Tool 189, 435
CHPID report 220
CHPID statement 263
CIB channel
over-defining 104
client
HCD client 417
CLIST used by HCD 16
CNC side information 140
CNTLUNIT statement 267
coexistence considerations 47
color settings for graphical reports 22
combined input data sets 246
command
syntax diagrams xxxiii
command line 56
commands
FIND 155
GOTO 58
HELPID 391
commands *(continued)*
HELPTEST 391
how to use 56
INSTRUCT 50
LEFT 50
LOCATE, graphical report 225
PANELID 391
PFSHOW 56
REFRESH, graphical report 226
RIGHT 50
SAVE 225, 226
SHOWIODF 37
SHOWMSG 402
SHOWMSG ACTIVATE 198
TRACE 404
TRACE, HCM 407
compare
CONFIGxx members 214
CSS/OS views, dialog 232
IODFs or CSS/OS Reports, batch 310
IODFs, dialog 228
compare reports
channel path 379
control unit 381
control unit attachment 380
CSS / OS device 385
device 381
device attachment 380
esoteric 383
Operating System Compare Report 384
OS console 385
OS device 384
partition 378
PCIe function 377
processor 377
switch 382
switch configuration detail 383
switch detail 382
compatibility 47
component ID 387
concatenation 13
configuration data
activating dynamically 195
consolidating 66
define 65
definition sequence 68
delete 65
modify 65
process 175
validation 3
configuration package
add 43
define 42
delete 43, 44
edit 43
list 41, 43
merge 43
problem determination for transmit procedure 397
replace 43
transmit 44
work with 41, 43
configuration report
build with batch 301

configuration reports
CF channel path connectivity report, example 344
channel path detail report, example 343
channel path summary report, example 341
channel subsystem reports, example 337
control unit detail report, example 346
control unit summary report, example 345
CSS report, description 217
CTC connection 218
CTC report, example 355
device detail report, example 348
device summary report, example 347
eligible device table report, example 352
examples 337
graphical configuration report 220
I/O definition reference 219
I/O definition reference, example 374
I/O path report 356
I/O path, description 218
IOCDS report, example 341
LCU report, example 376
MVS device detail report, example 352
MVS device report, example 351
NIP console report, example 353
operating system report, description 218
operating system report, example 350
operating system summary report, example 351
partition report, example 340
PCIe Function Summary Report 338
print with batch 304
printing graphical reports 220
printing textual reports 219
problem determination 392, 393
processor summary report, example 337
supported hardware report 358
supported hardware, description 219
Switch Configuration Compare Report 382
switch configuration detail report 350
switch configuration summary report, example 350
switch detail report, example 349
switch report, description 218
switch report, example 349
switch summary report 349
viewing graphical reports 220
VM console report, example 354
VM device detail report, example 354
VM device report, example 353
configuration status 201
CONFIGxx member
build using dialog 212
build with batch 301
compare using dialog 214
connecting
another switch to a switch 151
channel path to switch 150
control unit to switch 151
coupling facility channel paths 104
connection table
DD name HCDCNTL 209
reachable system 204
record format 209
connections of switches, possibilities 143
console
changing 133
console *(continued)*
configuration report, description 218
configuration report, example 353
deleting 133
report, example 354
working with 132
consolidating configuration data 66
contact
z/OS 425
context menu 53
control unit
attachment compare report, example 380
attachment data to processor 114
changing 116
changing attachment parameters for multiple processors 118
CNTLUNIT statement 267
compare report, example 381
configuration report, example 345
defining 112
deleting 118
disconnecting 118
migration enhancement 267
supported by system 235
working with 112
control unit list 67
control unit model 240
control units
autoconfigured 166
Converged Ethernet (RoCE) 92
copying
IODF, batch example 317
IODF, batch utility function 303
IODF, with dialog 36
coupling facility
changing connection 110
connecting channel paths 104
disconnecting channel paths 107
overview 8
view information 137
coupling facility connection report 220
CPC (central processor complex
support in HCD 8
CPC (central processor complex)
specify name 77
CPC image
connection table 208
reachable system 204
CPC Image List
available activation actions 206
CPC images
BCPii 209
dynamic activation of I/O changes 203
operation status 203
prerequisites 209
RACF Facility Class profiles 322
support element (SE) 209
Create Work I/O Definition File panel 31
create work IODF from production IODF 35
creating
graphical configuration report, batch 307
graphical configuration report, dialog 220
IODF using batch 248

creating *(continued)*
IODF using dialog 30
JES3 initialization stream checker data 191
new objects 65
cross operating system support 5
CSS
changing 86
copy 83
copying 85
defining 82
deleting 86
CSS (channel subsystem)
configuration report, description 217
configuration report, example 337
group change action 127
overview 1
CSS-related definitions for devices 122
CSS/operating system device compare report, example 385
CSS/OS report, compare with batch 310
CTC connection 139
CTC Connection List 138
CTC connection report
filter 141
incomplete definitions 140
print 141
report, example 355
with MIF 138
with shared channels 138
CTC Connection Report 218
CTC connection reportSelect one or more CTC connections and press the Enter key to display diagnostic messages for the connections.
diagnostic messages 141
CTC connections
copy/repeat 85
update 85
CTC side information 140
CU report 220
CUADD, CTC connection 138
customizing HCD 13

D

D/R OS configuration 70
D/R site OS configurations 70
data entry dialog 50
data sets
allocation for migration 286
cataloged with esoteric name 327
combined 246
example 188
generated during transmit configuration package 398
migrate with batch 292
migration 239
migration using the dialog 246
relationship in HCD 6
data sets due to HCM requests
allocation space 20
data space 23
DCF 220
DCM 101
ddnames
alternate 319
default for migration 286
ddnames *(continued)*
standard 318
dedicated connection 143, 154
dedicated operation mode 96
default connection 154
default switch matrix 155
defining
configuration packages 42
connections to switches 150
switch configurations 153
switches 145
defining RACF profiles 321
device
activate messages 201
attachment compare report, example 380
changing 126
changing CSS-related definitions for a group 127
changing DYNAMIC parameter 128
changing esoterics for a group 127
changing LOCANY parameter 128
changing number 130
changing OS-related definitions for a group 127
changing type/model of a group of devices 129
channel paths 112
compare report, example 381
compare, CSS/operating system 385
configuration package object 44
configuration packages 43
configuration report, description 218
console list, migration 277
consoles 133
control unit, migration 276
control units 118
defining 118
defining a group in one step 121
defining CSS-related definitions 122
defining OS-related definitions 124
defining SS-related definitions 122
deleting 132
detail report, example 348
device from esoteric device list, migration 277
device, migration 277
devices 132
disconnecting from operating system 131
EDTs 73
esoteric device list, migration 277
esoterics 76
identification 121
IODEVICE statement 269
IODF 36
migration enhancement 269
operating system configuration 71
partition, migration 276
partitions 91
processors 82
protection 325
restricting partition access 123
summary report, example 347
supported by system 237
switch configuration 149
switch-to-switch connection, migration 277
switches 149
switches, confirm 149
working with 118

device candidate list
    empty 124
    null 124
device list 67
device serial number 121
device type group change 129
diagnostic information and tools 401
diagnostic message, CTC connection 141
diagnostic messages 355
dialog, usage 49
different IODF levels 47
disable write protection 181
disabled marker 152
disconnecting
    control units from a processor 118
    coupling facility channel path connections 107
    devices from operating system 131
    multiple control units from a processor 118
discovery
    scope 167
dispatcher 417
display active sysplex member list 199
display diagnostic message, CTC connection 141
display graphical reports 223
dualwrite option 179
dumps 408, 409
duplicate control unit 242
duplicate device 245
dynamic channel path management 101
dynamic connection 138, 143
dynamic connection ports 154
DYNAMIC parameter 128
dynamic partition 88
dynamic reconfiguration management
    activation 195
    failure, sysplex-wide 201
    glossary definition 436
    hardware and software changes allowed 196
    identify device 121
    overview 3
    profile access 321
    rejection 198
    resource access 321
    software only changes allowed 198
    sysplex-wide 199
dynamic switch 143

E

editable fields 54
EDT
    changing 72
    configuration report, description 218
    configuration report, example 352
    defining 72
    deleting 73
    EDT statement 253
    migration enhancement 253
    repeating 73
    working with 72
EDT statement 253
enable write protection 181
ending HCD 16
enhanced migration 249
entry port, CTC connection 138
entry switch 143
environment for HCD 7
error message, CTC connection 140, 141
errors
    diagnosis 387
    during IPL 390
    during migration 247, 285
    during transmit procedure 397
ESCON director, CTC connection 138
esoteric compare report, example 383
esoterics
    changing 74
    defining 74
    deleting 76
    device group name 327
    keyword to allow mixed 20
    migration enhancement 254
    repeating 75
    token 254, 327
    token, migration 241
    UNITNAME statement 254
    working with 74
esoterics token 327
establishing coupling facility channel path connections 104
establishing dedicated connections 154
EXEC procedures 26
exit, function key 58
explicit device candidate list 90, 123
export
    IODF, batch 315
    IODF, dialog 38
EXPORTED_HLQ 20
extended IQD 102
extended migration
    IOCP input data set 187

F

fabric 143
Facility Class profiles
    for working with CPC images 322
failure, diagnosis 387
fast path 58
fast-path mode 159
FCP device data 192
FCP SAN configuration template file 192
FCTC 137, 138
feedback xxxvii
FICON
    cascade switching 143
    switch fabric 143
FICON Channel-to-Channel support 137
FICON devices
    I/O Autoconfiguration
    159
FICON switch
    downgrading link address 116
    upgrading link address 116
FICON switches 143
fields
    editable 54
    input and output 50
    promptable 56

filter CTC connection 141
filter mode 63
filtering a list 61
FIND command 155
font for graphical reports 22
formatting type for graphical reports 21
function keys
    actions 49
    add 65
    backward 50
    command 56
    Enter 58
    exit 58
    forward 50
    help 57
    how to use 56
    instruct 50
    jump 224
    left 50
    previous 58
    problem determination 391
    prompt 51
    reset 54
    right 50
    setting 24 keys on 15
    split 328
    zoom 224
FUNCTION statement 262

G

GDDM
    installation 13
    usage for reports 220
generate switch matrix 155
generic device type 436
generics
    migration enhancement 255
    UNITNAME statement 255
GML 220
GOTO command 58
graphical configuration report
    create with batch 307
    example 375
    font 22
    jumping to action lists 224
    LCU report, example 376
    limiting a graphical report 223
    prerequisites 220
    printing 220
    problem determination 393
    scaling factor 21
    viewing 220
graphical navigation 66
graphical representation 220
group change action for control units 115
group changes
    attribute group change for devices 128
    CSS group change for devices 127
    device type group change 129
    esoterics for a group of devices 127
    OS group change for devices 127

H

hardware and software changes allowed 196
Hardware Management Console 8, 436
hardware report 358
hardware support 233
HCA 103
HCD (Hardware Configuration Definition)
    abnormal termination 388
    and coupling facility 8
    customizing 13
    data sets relationship 6
    differences between HCD and MVSCP/IOCP 1
    ending 16
    environment 7
    installation considerations 13
    object management services 411
    overview 1
    overview of functions 4
    product identifier 387
    setting up 13
    starting 16
HCD agent 417
HCD client 417
HCD dispatcher 417
HCD profile
    standard keywords 17
HCD Profile Options dialog 18
HCD profile, define 420
HCD services
    access 418
HCDCNTL
    DD name for connection table 209
HCM change log data set
    allocation space extension 20
HCM master configuration file 437
HCM MCF
    volume serial number 20
HCPRIO input data set
    build with batch 300
    build with dialog 192
    migration 244
help
    how to get 57
    problem determination 391
    testing panels 391
HELPID command 391
HELPTEST command 391
hiding parameter/feature definitions 131
hierarchical navigation 66
highlighting 50
HLQ
    for exporting IODFs 20
HMC 8
HMC-wide activation 25
HOM services
    example 415
    functions 414
    input and output areas 412
    invocation 411
    request block (HRB) 412
    return codes 416
host access
    IPv6 417

host access *(continued)*
TCP/IP protocol 417
host communication adapter 103
HSA 200
HSA token 181
HWACT_TIMEOUT 25
HWI
RACF Facility Class profiles 322
HWI profiles
access rights 324

I

I/O Autoconfiguration
base IODF 159
fast-path 172
invocation 166
operational considerations 172
policy keywords 161
scope of discovery 167
target IODF 159, 168
unattended mode 172
updates to the proposals 169
I/O cluster 437
I/O concurrency level 90, 115, 117, 347
I/O configuration definition reference
configuration report, example 374
description 219
print 304
I/O device list
PPRC usage 119
I/O devices
autoconfigured 166
I/O path list 194
I/O path report
description 218
example 356
IBM ES/4381
build IOCP input data set 185
ID statement 259
identifying problems 387
IEC161I (copy IODF batch utility) 318
IEFESOJL (catalog scan utility) 328
image number, CTC connection 138
import
IODF, batch 314
IODF, dialog 40
incomplete CTC definitions 140
increased system availability 4
incremental update 273
initialization problems 395
initialization stream checker data for JES3 191
initialize IODF from VSAM DIV file 291
input fields 50
input parameter string, batch utilities 290
input to stand-alone IOCP 186
Input/Output Subsystem 159
installation-static 241
installed port range 147
installed ports 152
installed UIMs 237
installing
GDDM 13
HCD 13
INSTRUCT command 50
instruction area 50
insufficient data set sizes 286
interface
batch utility functions 289
dialog 49
HCD object management services 411
Internal Shared Memory PCIe Adapter (ISM). 92
Internet Protocol
Version 6 417
introduction 1
invoking batch utility functions 289
IOCDS
build processor cluster IOCDSs 181
build with batch 297
build with dialog 179
report, example 341
token 181
use with HCD 5
write in preparation for processor upgrade 179
IOCONFIG statement 252
IOCP
build input data set with batch 297
build input data set with dialog 185
example 188
extended migration 187
migrating additional data sets 242
migrating input data sets 239
stand-alone 186
use with HCD 1
IODEVICE statement 269
IODF
activity log 47
available IODFs 52
change log 47
multi-user access status 52
V5 IODF 36
validated work IODF 190
IODF (I/O definition file)
activity logging 31, 45
attributes 30
backup 35
build production IODF, batch 295
build production IODF, dialog 176
build work IODF, batch 296
change attributes 37
change during session 35
compare 228
compare reports, example 376
compare with batch 310
copy with batch 303
copy with dialog 36
data space 23
delete 36
description 2, 29
different levels 47
dump 408
export with batch 315
export with dialog 38
import with batch 314
import with dialog 40
initialize 291
maintenance 36
master 33

IODF (I/O definition file) *(continued)*
multiple 32
naming conventions 29
objects managed in 5
prefix 216
release level compatibility 47
repair 408
sharing 32
single 32
space allocation 31
specify 30
subset 33
suffix 216
transfer to a different system or location 409
upgrade with batch 292
upgrade with dialog 40
used at IPL 6
used for last IPL 35
view currently accessed one 37
volume serial number 31
IODF checker 23, 177
IOS 159
IPL
attribute list 184
attribute management functions 9
errors 390
IODF processing 216
manage attributes for processor cluster 184
specify an IODF 216
with MVSCP 4
IPLADDR value 184
IPLPARM value 184
IPv6 417
IQD channel
IEDN access 102
IQDX function 102
IQDC frame size 101
IQDX 102
ISPF considerations 328
ISPF list file 389
ISPF, tailoring 15

J

JCL
for creating a user ID for UNIX System Services 420
JES3 initialization stream checker data 191
JES3, build with batch 301
job statement information 64
jumping from graphical reports 66, 224

K

keyboard
navigation 425
PF keys 425
shortcut keys 425
keywords
I/O Autoconfiguration
161
keywords in HCD profile 19

L

LCSS 76, 96, 437
LCU (logical control unit)
report, example 376
report, how to generate 220
LEFT command 50
legend, CTC report 355
library concatenation 13
limit CTC connection report 219
limiting a graphical report 223
link address 115
link address, CTC connection 138
lists
action list 52
configuration package list 41
configuration package object list 43
filtering 61
I/O path list 194
numbered selection lists 51
selection methods 51
unnumbered multiple selection lists 52
unnumbered single selection lists 51
working with 51
LOAD parameter 216
local system name 77, 437
LOCANY parameter 128
LOCATE command 50
LOCATE command, graphical report 225
logging 45
logical address 116
logical partition group 164
LP group 163, 164
LPAR (logical partitions)
defining 87

M

maintain IODF 36
manage processor cluster IPL attributes 184
MAP_CUTYPE 22, 240
mapping of migrated data 242
master configuration file
volume serial number 20
master IODF
merge changes 43
matrix, generate switch 155
maximum frame size 101
MCF
volume serial number 20
MCF data set
allocation space extension 20
naming convention 30
MCF_EXTENSION 20
message list 55, 283
Message List
delete messages 55
explain messages 55
save messages 55
message list, CTC connection 142
message log 402
messages
overview 401
reason code 388

MIF
defining with HCD 96
MIF, CTC connection 138
Migrate IOCP / MVSCP / HCPRIO Data dialog 246
MIGRATE_EXTENDED 188
migration
additional input data sets 242
advantages 249
assembler check 247
batch utility 292
changing input data sets 239
conflicts 239
consideration 239
control unit type mapping 22, 240
coupling facility updates 248
data set allocation 286
enhancements 249
errors 247
existing input data sets 239
extended migration 249
for combined IOCP/MVSCP input data set 239
log 285
LPAR considerations 239
multiple IOCP/MVSCP statement 239, 242
new parameters 249
overview 11
partial 273
preparation 239
prerequisites for extended migration 188
processing mode 247
protocol support for control units 240
return code 248
roadmap 11
sequence 239
solving errors 283
termination 247
using the HCD batch utility 248
using the HCD dialog 246
validation rules 240
migration log 402
minimum installed port range 256
mixed environment 192
mixed esoterics
profile keyword 20
module prefix 387
moving directly 58
multi-user access
abend 32
enforcing a refresh view on the IODF 133
release a lock 32
scenarios 133
multiple exposure device 438
multiple IODFs 32
MVS device report, example 351
MVS devices 358
MVSCP (multiple virtual system configuration program)
differences to HCD 1
migrating additional input data sets 244
migrating input data sets 239
use with HCD 1

N

naming convention of IODF 29
navigating through HCD 66
navigation
keyboard 425
navigation map 67
network name 77
next POR 214
NIP console
NIPCON statement 253
working with 132
NIP console report, example 353
NIPCON statement 253
null device candidate list 124
numbered selection lists 51

O

occupied indicator
PORT statement 257
operating mode
changing 109
how to use 96
operating requirements for HCD 7
Operating System Compare Report, example 384
operating system configuration
changing 70
defining 69
deleting 71
group change action 127
IOCONFIG statement 252
migration enhancement 252
repeating 71
report, description 218
reports, example 350
working with 69
operation mode
attended mode 159
unattended fast-path mode 159
operation status of CPC images 203
optional comment for SAVE command 227
options for text reports 21
OS configuration
D/R site OS configuration 70
OS configuration group 165
OS console compare report, example 385
OS device compare report, example 384
OS group 163, 165
OS group change action 127
OS parameters/features 271
OS report 218
OSD channel 103
output field 50
overview of HCD 1
overview, migration 11

P

panel
flow of HCD options 331
identifier 49, 391
layout 49
problem determination 391
title 49
PANELID command 391

partial migration 273
partition
    changing 88
    compare report, example 378
    configuration report, example 340
    defining 87
    deleting 91
    dynamic I/O 88
    migration enhancement 260
    repeating 89
    RESOURCE statement 260
    transferring 89
    working with 87
partition access to CHPIDs 197
partition usage 88
PassTicket
    for working with CPC images on z/VM 325
PassTickets
    for working with CPC images on z/OS 324
PAV alias device 122
PCHID 189, 438
PCIe function
    FUNCTION statement 262
    migration enhancement 262
    PCIe Function Compare Report 377
    PCIE Function Summary Report 338
PCIe Function Compare Report 377
PCIe Function Summary Report 338
PCIe functions 92
peer coupling channel 438
peer-to-peer remote copy 438
Peripheral Component Interconnect Express (PCIe) 92
PFSHOW command 56
physical channel identifier 189, 438
physical network ID 102
planning
    migration consideration 239
    migration, data set allocation 286
    your configuration 65
Point-to-point CTC connection 139
policy keywords
    autoconfiguration 161
POR (power-on reset) 4
POR, switch IOCDS 203, 215
port configuration 258
port list 152
port matrix 143, 154
port range 147
PORT statement 257
port, moving switch 148
PORTCF statement 258
ports, blocking 154
PPRC 438
PPRC usage
    in I/O Device List 119
PR/SM 8
pre-migration activities 239
preallocation 286
preference value 73, 439
preparing for migration 239
prerequisites
    working with CPC images 209
previous, function key 58
printing
    activity log 232
    compare reports 228
    configuration reports, batch 304
    CTC connection 141
    graphical configuration report 221
    graphical reports 223
    list panels 226
    problem determination 392
    textual configuration reports 217
problem determination
    abnormal termination 388
    diagnostic information and tools 401
    errors during IPL 390
    graphical reports 220, 393
    help information 391
    identifying problems 387
    initialization of HCD 395
    IODF dump 408
    panels and function keys 391
    repair an IODF 408
    system abend code '00F' 388
    system abend code other than '00F' 389
    textual reports 392
    trace facility 402
    transmit procedure 397
    UIMs 396
problem reporting data bases 409
process configuration data 175
processing mode, migration 247
processor
    changing 78
    changing type 78
    compare report, example 377
    configuration report, example 337
    defining 76
    deleting 82
    ID statement 259
    migration enhancement 259
    repeating 80
    support level 77
    supported by system 233
    working with 76
processor cluster support 8
Processor Resource/Systems Manager
    glossary definition 439
processor upgrade, write IOCDS 179
product identifier 387
production IODF
    build with batch 295
    build with dialog 176
    change 35
    format of 30
    how to specify 30
    replace during build production IODF 176
profile
    HCD 420
profile for HCD 16
profile keywords
    standard 17
profile option
    mixed esoteric 20

profile options 18
programming interface for HCD 289
promptable fields 56
protected devices 325
protocol support for control units, migration 240

Q

query supported hardware 233

R

RACF
    defining profiles 321
RDMA 92
re-migrate IOCP input data sets 187
reachable system 204
read access 322
reason code 388
receiving an IODF 40
reconfigurable operation mode 96
Recovery 211
REFRESH command, graphical report 226
refreshing a view on IODFs 133
refreshing the active sysplex member list 200
Regional Crypto Enablement (RCE). 92
rejection of dynamic activation 198
relationship of data sets 6
release level compatibility 47
Remote Direct Memory Acces (RDMA) 92
repair an IODF 408
repeating
    action 66
    channel subsystem 83
    description 66
    EDTs 73
    esoterics 75
    operating system configuration 71
    partitions 89
    processors 80
replacing
    during build production IODF 176
replacing objects through migration 273
reporting problems 409
reports, text, options 21
requirements
    for setting up HCD 13
    for using HCD 7
    migrating IOCP/MVSCP data 239
reserved partition 88
reset function key 54
reset source configuration sysplex-wide 202
RESOURCE statement 260
restricting partition access for devices 123
resume activation sysplex-wide 202
return code, migration 248
RIGHT command 50
roadmap, migration 11
RoCE 92

S

SAVE command 225, 226
SAVE command, CTC connection 141
scaling factor for graphical reports 21
scenario
    multi-user access 133
scrolling 50
SE
    working with CPC images 209
search order at IPL 216
searching data bases 409
security considerations 321, 325
selection markers 53
selection methods in lists 51
sending an IODF 38
sending to IBM
    reader comments xxxvii
sensing 9, 356
sequence of migration 239
sequence to define a configuration 68
serial number for device 121
Server Time Protocol 439
Server Time Protocol (STP) link 107
setting up HCD 13
severity of messages 142
shared channels, CTC connection 138
shared operation mode 96
sharing IODFs 32, 47, 326
shortcut keys 425
showing parameter/feature definitions 131
SHOWIODF command 37
SHOWMSG ACTIVATE command 198
SHOWMSG command 402
single IODF 32
single point of control 4, 199
single selection lists 51
SMP processor 439
SMP processors
    term definition 76
SMS considerations 328
SNA address 78
software only changes allowed 198
solving migration errors 283
space allocation 31
spanned channel paths 96
spanned operation mode 96
specifying
    input data sets for migration 246
    IODF, dialog 30
split screen 328
SPOF 194
SS (subchannel set) 122
SS-related definitions for devices 122
stand-alone CTC adapter 138
stand-alone IOCP 186
standard DD names 318
standard profile keywords 17
starting
    HCD 16
    migration 246
    the dialog, batch 290
status of configuration 201
STP 439
STP link 107
subchannel set
    glossary definition 440

summary of changes xxxix, xl
summary reports
    CHID function 339
    PCIe function 338
support element
    working with CPC images 209
support level
    online description 77
    provided functions 77
supported hardware 233
supported hardware report 358
supported migration paths 11
surrogate user ID
    for exporting IODFs 39
SWCONF statement 257
switch
    blocking ports 154
    chained switches 143
    changing data 148
    compare report, example 382
    confirming delete 149
    connections to switches 149
    dedicated connection 143
    default connection 154
    defining 145
    defining connections 150
    deleting 149
    disabled marker 152
    dynamic connection 143
    dynamic switch 143
    entry switch 143
    graphical report 220
    matrix, default 155
    migration enhancement 256
    moving ports 148
    port matrix 143
    port range 147
    possible connections 143
    report, example 349
    supported by system 235
    SWITCH statement 256
    textual report, description 218
    validation 145
    working with 143
switch configuration
    changing 148
    changing ID 155
    compare report, example 383
    defining 153
    definition 143
    deleting 156
    generate matrix 155
    migration enhancement 257
    report, example 350
    select other 153
    SWCONF statement 257
Switch Configuration Compare Report 382
switch IOCDS for next POR 179, 181, 214
switch IOCDS for next POR, sysplex-wide 203, 215
SWITCH keyword 143
SWITCH statement 256
symptom table 387
syntax diagrams
    how to read xxxiii
SYS1.LOGREC record 389
SYS1.SAMPLIB 328
sysplex 199, 440
sysplex couple data set 200
sysplex member list 199
sysplex, support 9
system abend code
    '00F' 388
    other than '00F' 389
system names 200

T

target IODF 159, 168
TCP/IP definitions
    IPv6 417
termination
    of initialization 395
    of migration 247
test an activation sysplex-wide 201
test help panel 391
textual configuration report, how to print 217
textual configuration reports, examples 337
timing-only link 107
title line 49
token 187
token, esoteric 254
TOP command 50
TRACE command 404
TRACE command and HCM 407
TRACE command via HCD profile 407
trace data set 407
trace data set allocation 421
trace facility 402, 421
trademarks 431
transfer of IODF to another location or system 409
transferring partitions 89
transmit a configuration package
    problem determination 397
type of channel path, changing 108
typing over existing data 54

U

UIM
    library name 21
    list of installed ones 237
    problem determination 396
    use by HCD 7
unattended export 38
unatttended fast-path mode 159
uninstalled ports 152
unit address range 115
UNITNAME statement, esoteric 254
UNITNAME statement, generic 255
unnumbered multiple selection lists 52
update access 322
update CTC connections 85
updating parts through migration 273
upgrade
    IODF, batch 292
    IODF, dialog 40
usage type 277

user authentication
    export IODF
        sending user ID and PW 38
        using surrogat user ID 38
user interface
    ISPF 425
    TSO/E 425
utility functions, batch 289

V

V5 IODF 36
validated work IODF 190, 440
validation
    during build production IODF 176
    during migration 248
    rules for migration 240
    switch configuration data 145
    what HCD does 3
verify CTC connection 137
verify your definitions 221
verifying configuration
    against local system 193
    against remote system 193
view graphically 221
View I/O Definition File Information panel 37
viewing
    activity log 232
    CF control unit and devices 137
    configuration data 65
    coupling facility information 137
    currently accessed IODF 37
    destination channel path definition 137
    graphical reports 223
    IODF used for last IPL 35, 195
    logical control units 137
    messages 201
    next IODF processor 182
    object definitions 136
    source channel path definition 137
VIO (virtual input/output) 440
VM
    build HCPRIO input data set, batch 300
    build OS configuration data set 192
    considerations 328
    console report, example 354
    device detail report, example 354
    device report, example 353
    load UIMs 21
    migration considerations 241
VM guest, sysplex-wide activate 200
VOLSER, other data sets 19
volume serial number, IODF 31
VSAM data set, initialize 291

W

wait state 390
wildcard processing, example 63
work area 49
work IODF
    build with batch 296
    format of 29
work IODF *(continued)*
    how to specify 29
working with
    channel path 96
    consoles 132
    control units 112
    devices 118
    EDTs 72
    esoterics 74
    generics 73
    operating system configuration 69
    partitions 87
    processors 76
    switches 143
world-wide panel names generation 192
write IOCDS 179
write protection, enable and disable 181
WWPN Prediction Tool
    FCP SAN configuration template file 192

X

XMP processor 441
XMP processors
    term definition 76

Z

zEDC-Express 92
zooming graphical reports 224

Product Number: 5650-ZOS

SC34-2669-50