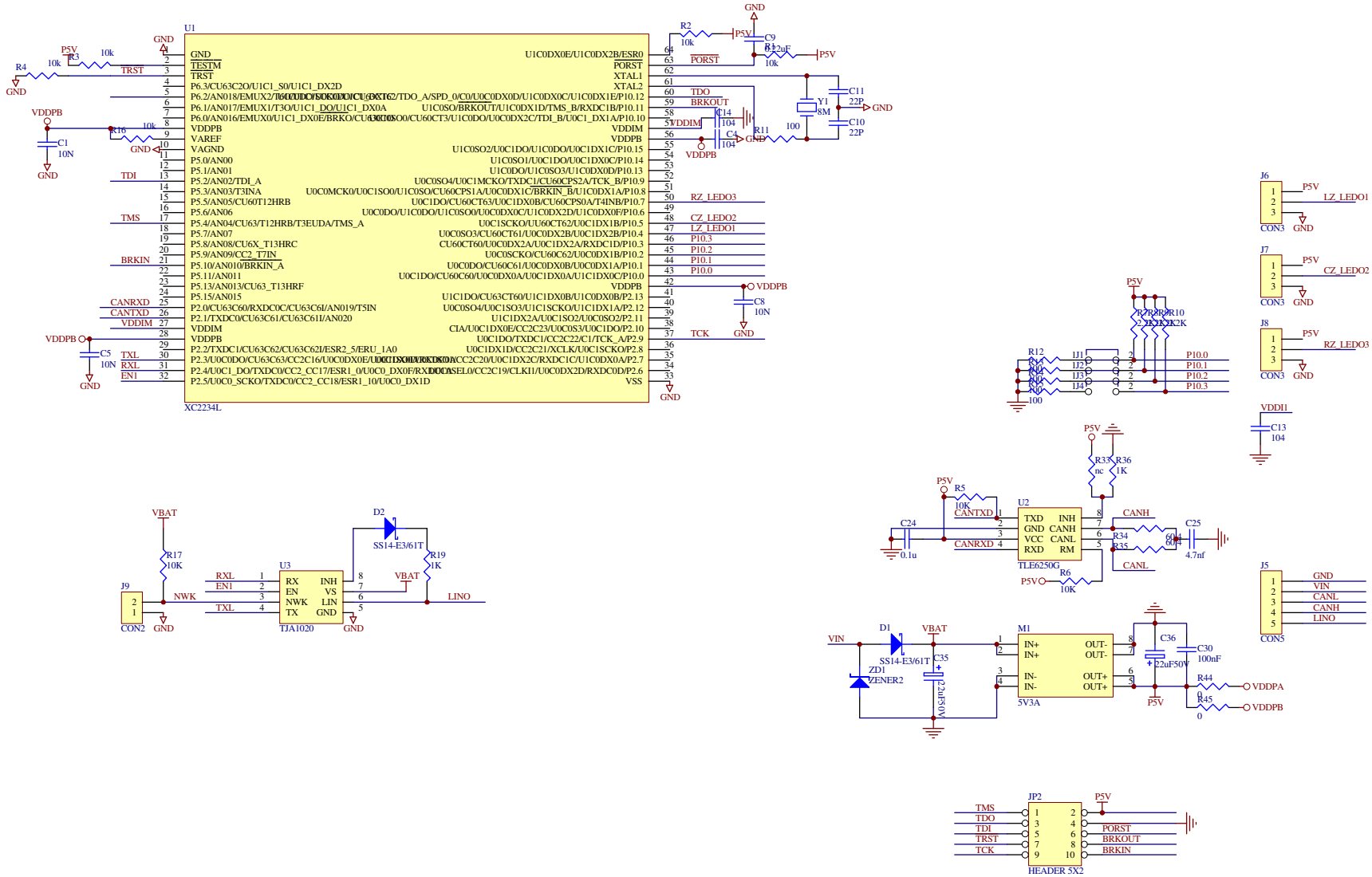
U1
XC2234L
GND
TESTM
TRST
P6.3/CU63C2O/U1C1_S0/U1C1_DX2D
P6.2/AN018/EMUX2/T6O/U0C0/U0C0_DX0D/U1C0_DX1E/TDO_A/SPD_0/C0/U0C0DX0D/U1C0DX0C/U1C0DX1E/P10.12
P6.1/AN017/EMUX1/T3O/U1C1_DO/U1C1_DX0A/U1C0SO/BRKOUT/U1C0DX1D/TMS_B/RXDC1B/P10.11
P6.0/AN016/EMUX0/U1C1_DX0E/BRKO/CU63C0O/U0C0SO/U0C0SO/CU60CT3/U1C0DO/U0C0DX2C/TDI_B/U0C1_DX1A/P10.10
VDDPB
VAREF
VAGND
P5.0/AN00
P5.1/AN01
P5.2/AN02/TDI_A
P5.3/AN03/T3INA
P5.5/AN05/CU60T12HRB
P5.6/AN06
P5.4/AN04/CU63/T12HRB/T3EUDA/TMS_A
P5.7/AN07
P5.8/AN08/CU6X_T13HRC
P5.9/AN09/CC2_T7IN
P5.10/AN010/BRKIN_A
P5.11/AN011
P5.13/AN013/CU63_T13HRF
P5.15/AN015
P2.0/CU63C60/RXDC0C/CU63C6I/AN019/T5IN
P2.1/TXDC0/CU63C61/CU63C61I/AN020
VDDIM
VDDPB
P2.2/TXDC1/CU63C62/CU63C62I/ESR2_5/ERU_1A0
P2.3/U0C0DO/CU63C63/CC2C16/U0C0DX0E/U0C1DX0E/U0C1DX0E/U0C0DX0E/U0C1DX0E/U0C0DX0E/U0C1DX0E/U0C0