Projects Portfolio

Ziming [Tiger] Ye

Mechatronics Engineering - University of Waterloo

FRC 2019/2020 ROBOT

Skills: Fusion 360, Drill Press, Filing, Milling, Band Saw, Hand Drill, Riveting, Communication, Leadership

- Designed robot in Fusion 360 around tasks outlined by the 2020 FRC game
- Stress simulations done in Fusion 360 to ensure climb mechanism could support robot weight
- Integrated parts from McMaster-Carr into design of robot
- Directed workflow and communicated with other leads in a fast-paced work environment

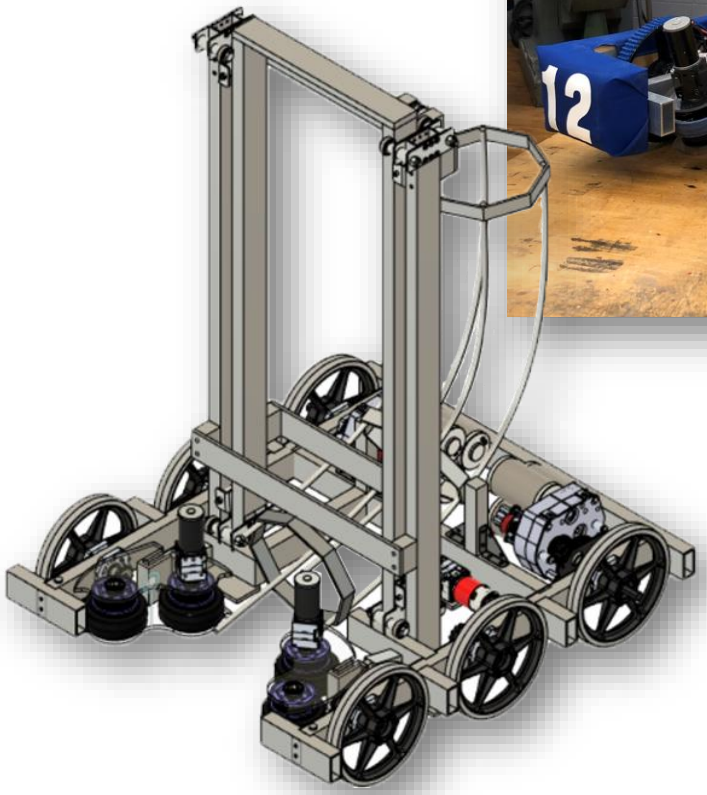

3D PRINTED COMPUTER MOUSE 🔗

Skills: SOLIDWORKS [surfacing tools], GD&T, Measuring Dimensions, Iterative Design, Cura

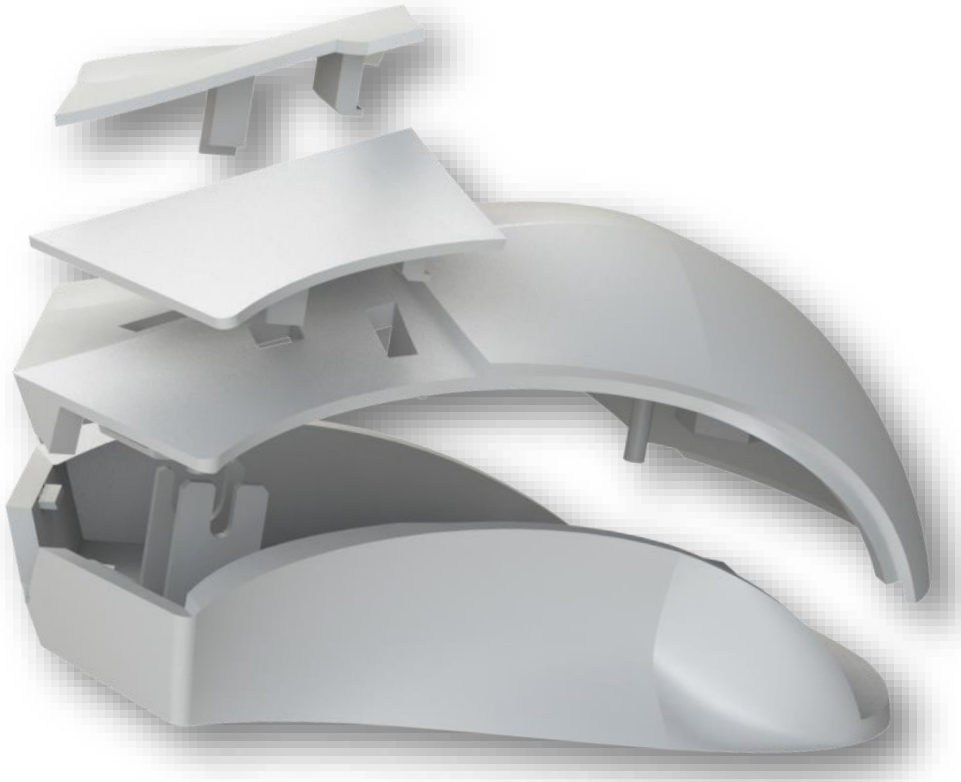

- Designed a mouse body using surfacing tools in SOLIDWORKS
- Mouse was designed for a previous circuit board so dimensions were precisely measured
- Went through iterative design testing to perfect the shape and feel of mouse

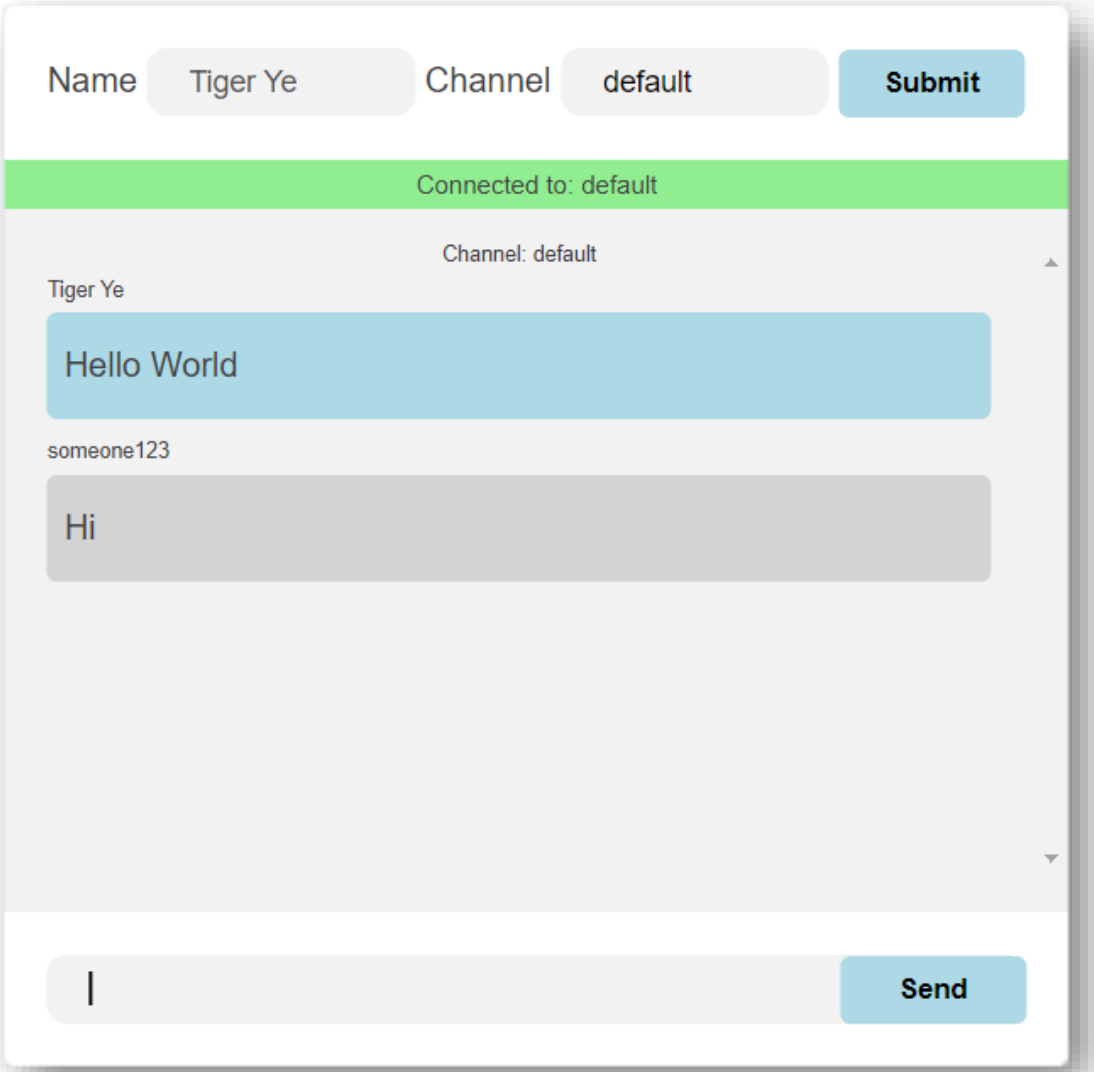

CHAT APP

Skills: Node.js, jQuery, JavaScript, CSS, HTML, Ably Realtime API, Heroku, Express.js

- Programmed online chatroom application using Ably Realtime API
- Utilized Express.js for backend JavaScript code
- Applied jQuery to add HTML message components to chat
- Hosted application on Heroku servers

COVER LETTER TEMPLATE SCRIPT 🔗

Skills: Python, Selenium, Python-docx, Xpath

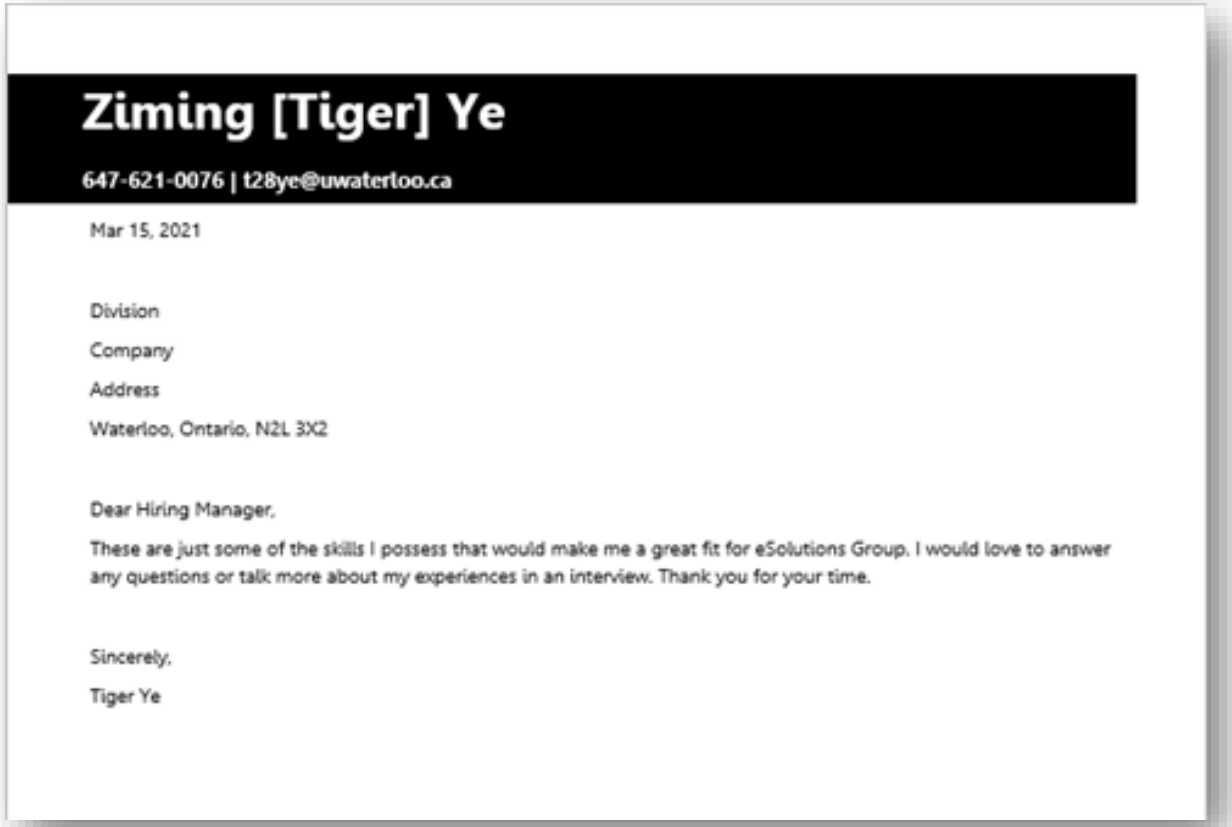

Ziming [Tiger] Ye

647-621-0076 | t28ye@uwaterloo.ca

Mar 15, 2021

Division
Company
Address
Waterloo, Ontario, N2L 3X2

Dear Hiring Manager,

These are just some of the skills I possess that would make me a great fit for eSolutions Group. I would love to answer any questions or talk more about my experiences in an interview. Thank you for your time.

Sincerely,
Tiger Ye

- Programmed cover letter template script in Python
- Utilized Selenium to access employer information through WaterlooWorks and write to Word using Python-docx
- Automated the template script to go through all items in my shortlist
- Always trying to improve it every work term :)

FINETUNED 🔗

Skills: Python, PIL Library, Spotify API, Flask

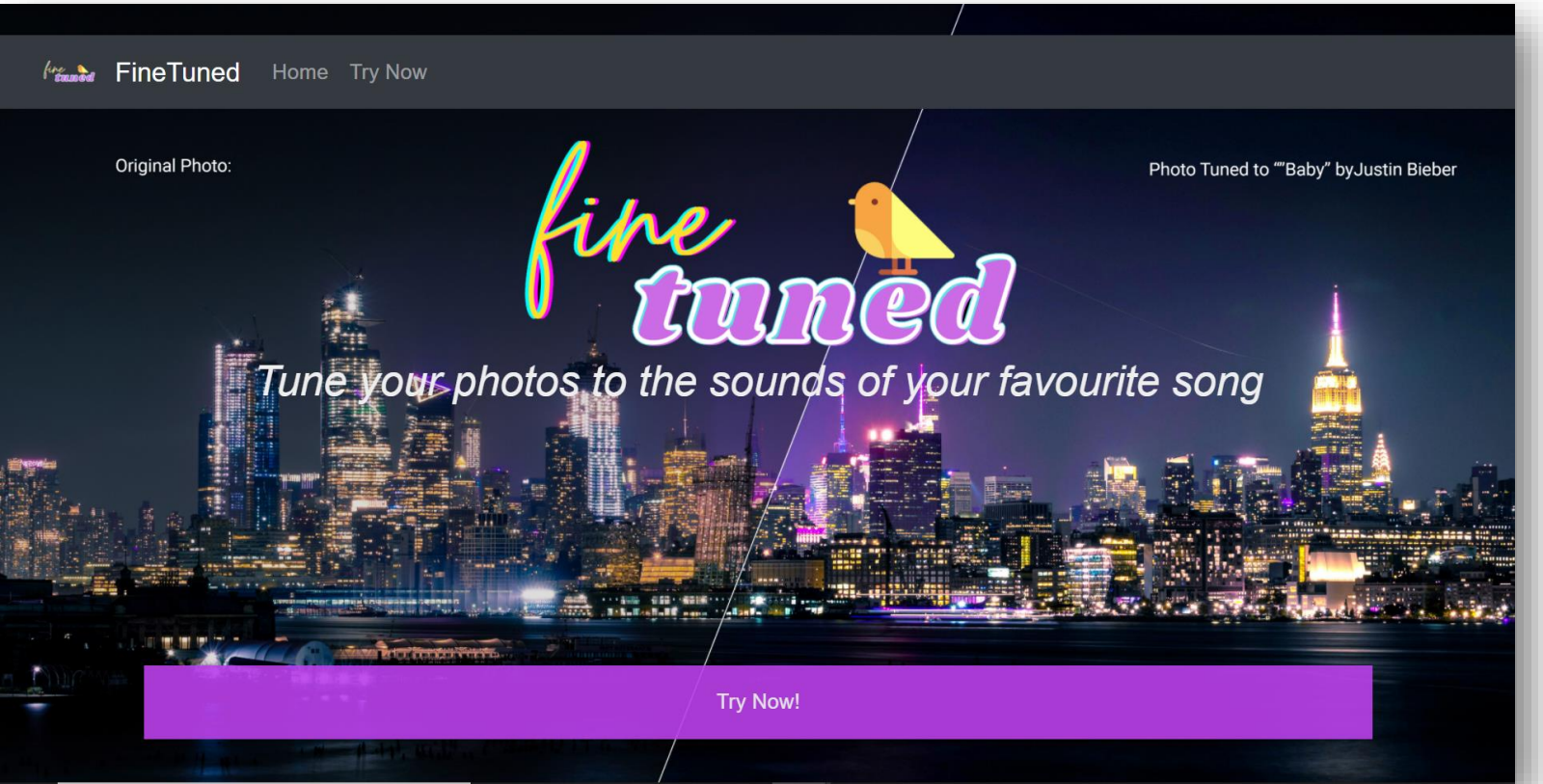

- Designed a webpage that edits photos based on song data
- Used PIL Library in Python to edit images based on Spotify API values
- Utilized Flask to build parts of application using Python

CONVEYOR ASSEMBLY 🔗

Skills: SOLIDWORKS, GrabCAD, McMaster-Carr

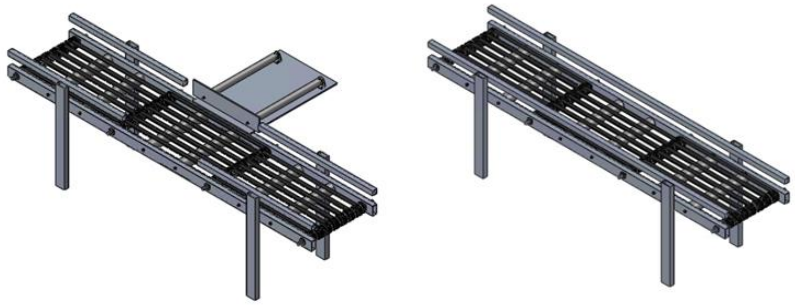

- Designed a modular sorting conveyor system in SOLIDWORKS
- Selected motor from McMaster-Carr taking into consideration continuous operating torque, duty cycle etc.
- Organized conveyor into multiple assemblies and sub-assemblies

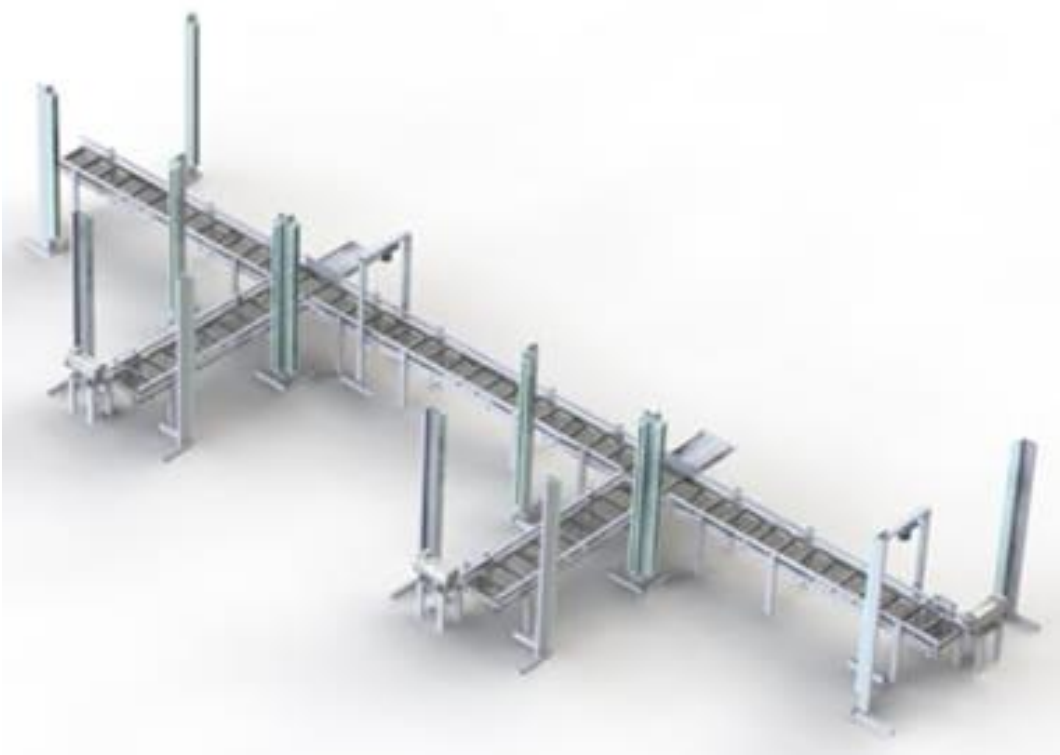

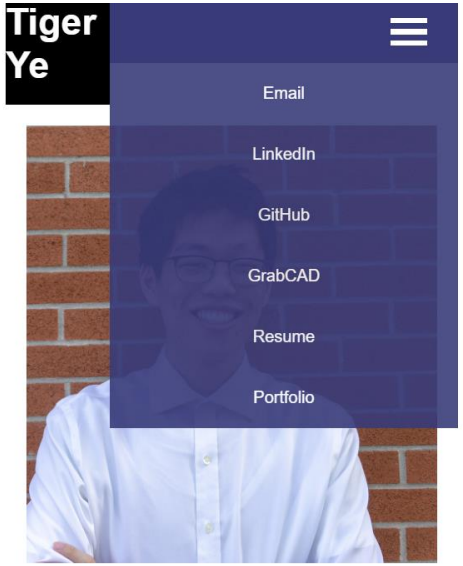

PERSONAL WEBSITE 🔗

Skills: JavaScript, SCSS, CSS, HTML

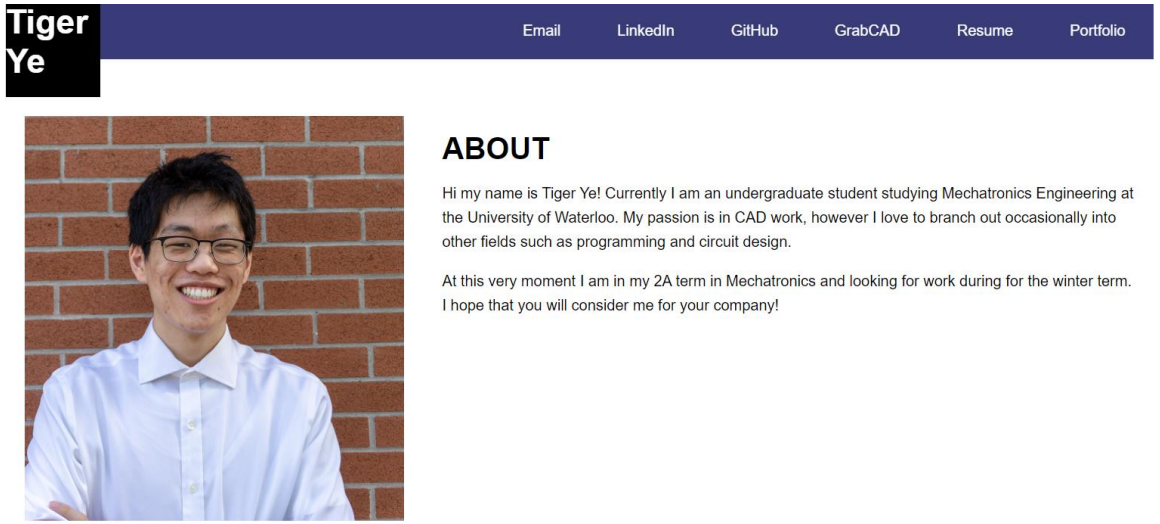

- Created a responsive personal website using JavaScript, SCSS and HTML
- Used keyframes for subtle animations
- Utilized media screen to create an adaptive webpage perfect for all screen sizes
- Uses exec commands to unobtrusively copy email to clipboard

LEAST TORQUE CALCULATOR 🔗

Skills: C++, Cosine Law, Vectors

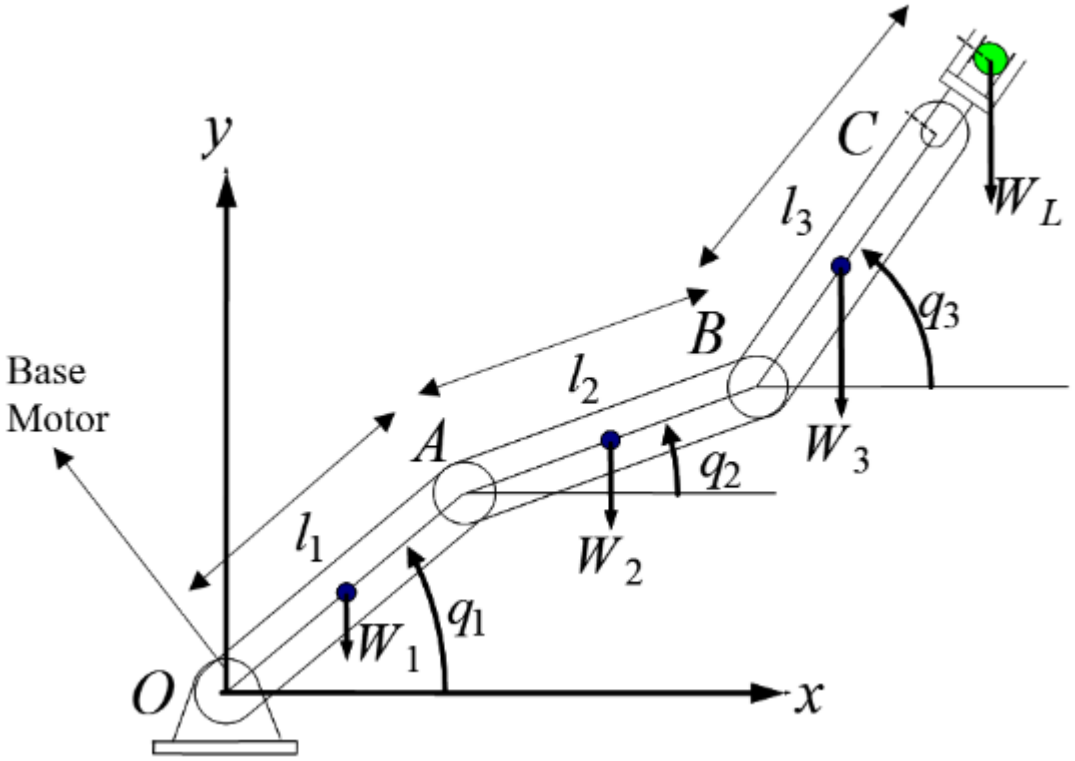

- Designed and programmed a C++ script to find the combination of 3 links that produce the least torque in 3 positions
- Utilized Cosine Law to find the length of the first 2 links
- Implemented link collision detection to detect if links are intersecting
- For a detailed look check out this report!

	Gripper Location	Link 3 Orientation
Position 1	x = 0.75m, y = 0.1m	q_3 = -60° w.r.t the x-axis
Position 2	x = 0.5m, y = 0.5m	q_3 = 0° w.r.t the x-axis
Position 3	x = 0.2m, y = 0.6m	q_3 = 45° w.r.t the x-axis

Some Other Projects

- **Curling Game** – My first big coding project, a curling game coded in Python using Pygame
- **3D Printable Turntable** – Designed a simple turntable for my mom to hold kitchen spices in Fusion 360
- **Game of Pig** – Programmed the game of pig in Java for a culminating project
- **Phone Stand** – Designed an adjustable phone stand in SOLIDWORKS for project
- **IEEE754 Converter** – Programmed Java application that manually converts integers to IEEE754 and vice-versa
- **Millennium Puzzle** – Used Fusion 360 to design a intricate prop from a childhood TV show
- **Car CAD** – Designed a simple car using surfacing features in Fusion 360

For More Check Out My

GitHub: https://github.com/tigerqye

GrabCAD: https://grabcad.com/tiger.ye-1