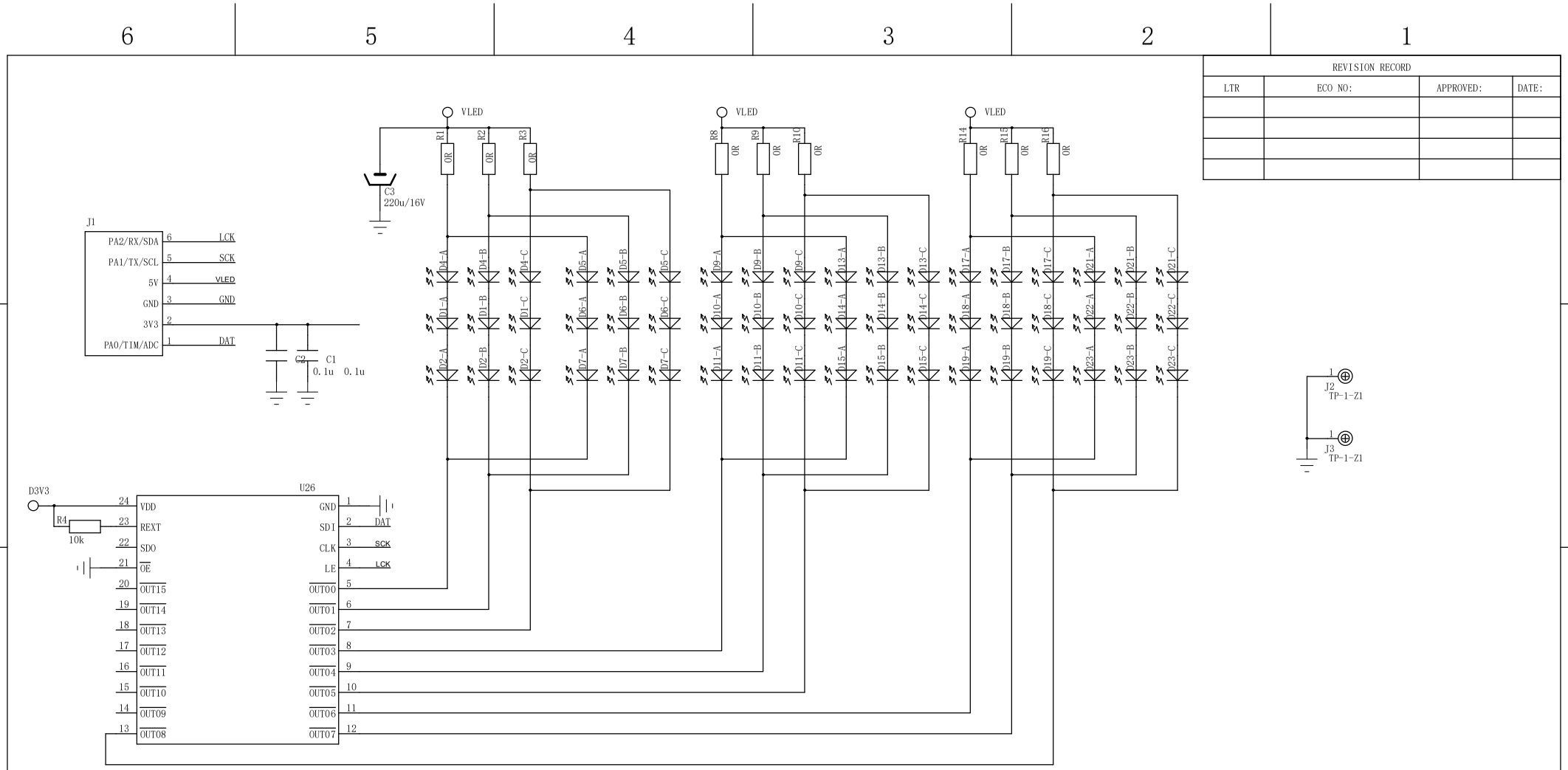


| REVISION RECORD | | | |
|---|---|---|---|
| LTR | ECO NO: | APPROVED: | DATE: |
| | | | |
| | | | |
| | | | |
| | | | |

| | |
|---|---|
| DRAWN: TIKO | DATED: 20180530 |
| CHECKED: | DATED: |
| QUALITY CONTROL: | DATED: |
| RELEASED: | DATED: |

COMPANY: Shenzhen iN-Cube Automation Co., Ltd.

TITLE: Smart Charging

| CODE: | SIZE: | DRAWING NO: | REV: |
|---|---|---|---|
| | B | | |

SCALE:

SHEET: 1 OF 1