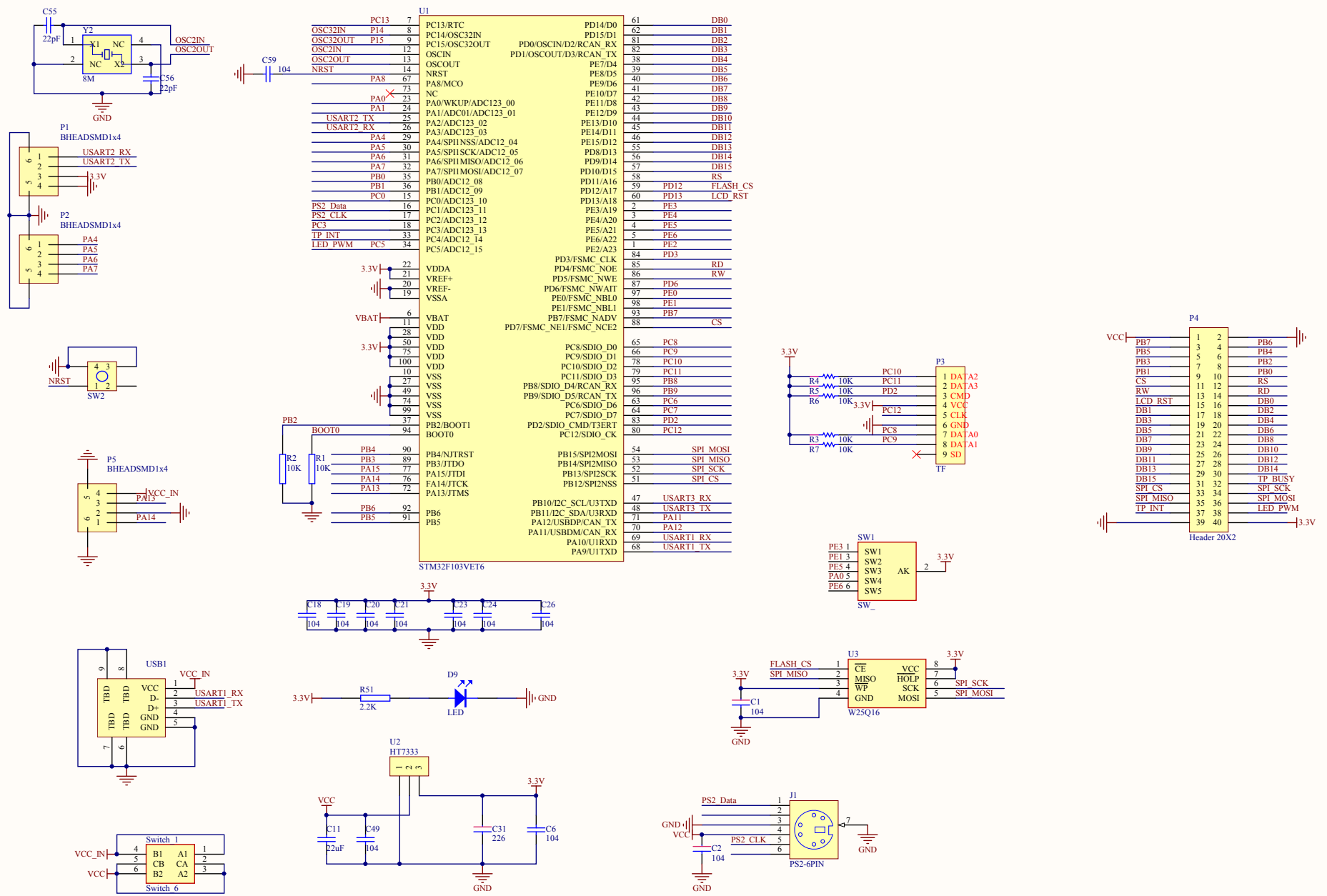

Title			
Size A3	Number		Revision
Date: 2014/9/18		Sheet of	
File: D:\hardware_design\..\Tiky		Drawn By:	