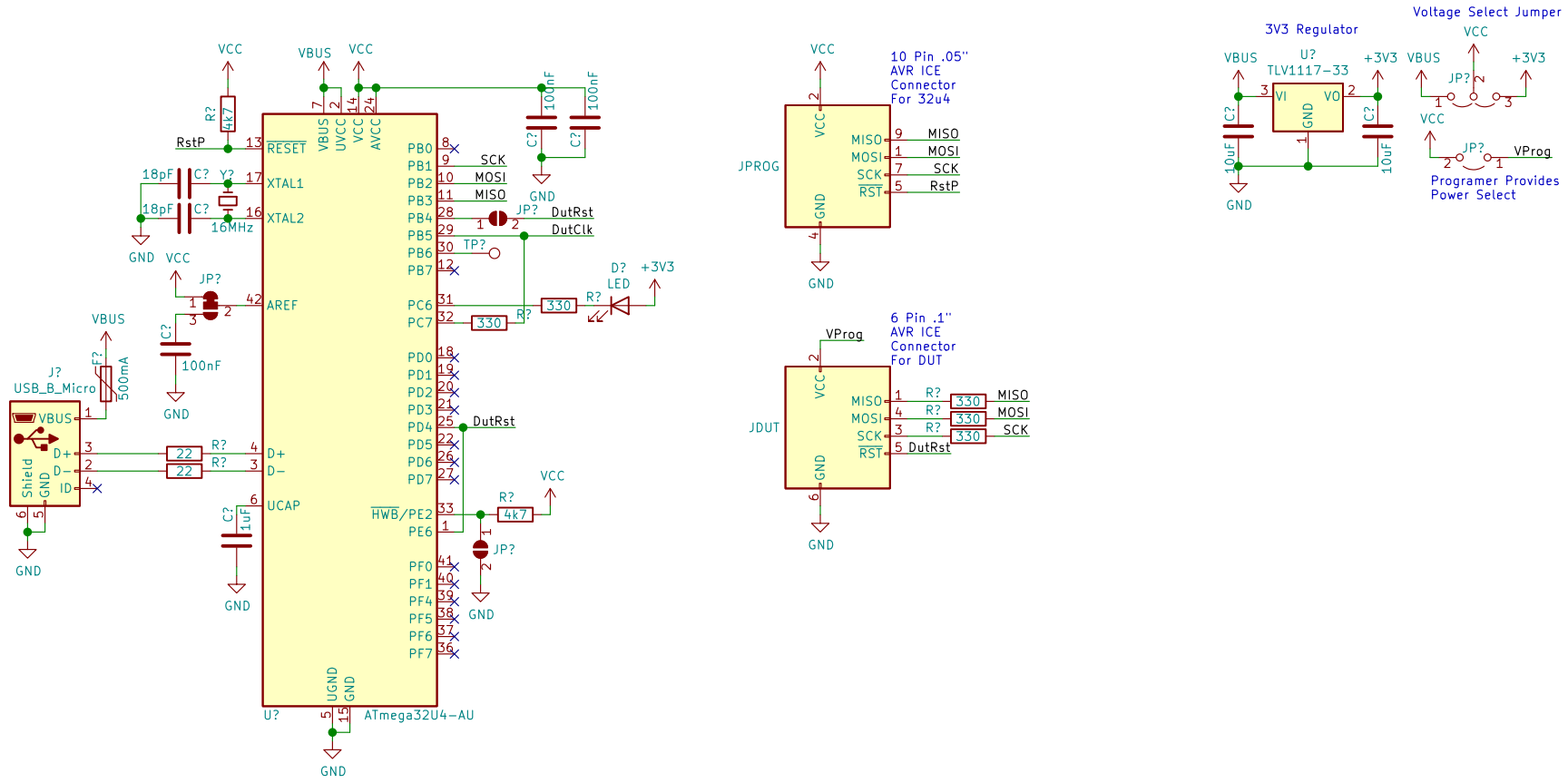

Sheet: /
File: WetProgrammer.sch

Title: WET AVR Programmer

Size: USLetter	Date: 2021-08-31	Rev:
KiCad E.D.A. kicad (5.1.9)-1		Id: 1/1