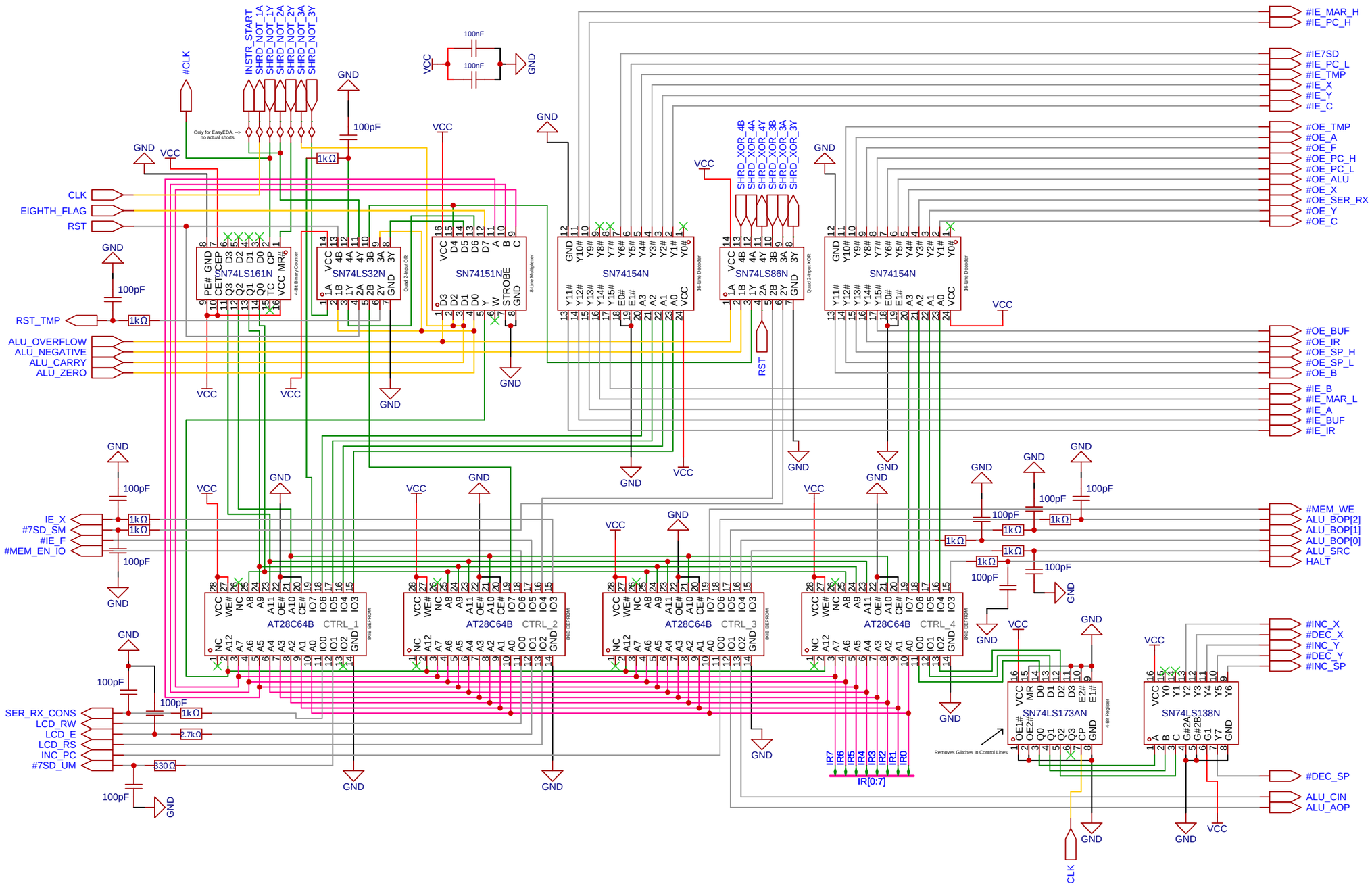
#CLK
INSTR_START
SHRD_NOT_1A
SHRD_NOT_1Y
SHRD_NOT_2A
SHRD_NOT_2Y
SHRD_NOT_3A
SHRD_NOT_3Y
Only for EasyEDA, --> no actual shorts
GND
VCC
100nF
100pF
1kΩ
CLK
EIGHTH_FLAG
RST
RST_TMP
ALU_OVERFLOW
ALU_NEGATIVE
ALU_CARRY
ALU_ZERO
SN74LS161N
4-Bit Binary Counter
SN74LS32N
Quad 2-Input OR
SN74151N
8-Line Multiplexer
SN74154N
16-Line Decoder
SN74LS86N
Quad 2-Input XOR
SHRD_XOR_4B
SHRD_XOR_4A
SHRD_XOR_4Y
SHRD_XOR_3B
SHRD_XOR_3A
SHRD_XOR_3Y
#IE_MAR_H
#IE_PC_H
#IE7SD
#IE_PC_L
#IE_TMP
#IE_X
#IE_Y
#IE_C
#OE_TMP
#OE_A
#OE_F
#OE_PC_H
#OE_PC_L
#OE_ALU
#OE_X
#OE_SER_RX
#OE_Y
#OE_C
#OE_BUF
#OE_IR
#OE_SP_H
#OE_SP_L
#OE_B
#IE_B
#IE_MAR_L
#IE_A
#IE_BUF
#IE_IR
IE_X
#7SD_SM
#IE_F
#MEM_EN_IO
AT28C64B CTRL_1
AT28C64B CTRL_2
AT28C64B CTRL_3
AT28C64B CTRL_4
8KB EEPROM
#MEM_WE
ALU_BOP[2]
ALU_BOP[1]
ALU_BOP[0]
ALU_SRC
HALT
SER_RX_CONS
LCD_RW
LCD_E
LCD_RS
INC_PC
#7SD_UM
2.7kΩ
830Ω
IR7
IR6
IR5
IR4
IR3
IR2
IR1
IR0
IR[0:7]
SN74LS173AN
4-Bit Register
Removes Glitches in Control Lines
SN74LS138N
#INC_X
#DEC_X
#INC_Y
#DEC_Y
#INC_SP
#DEC_SP
ALU_CIN
ALU_AOP