STS100D / STS250D Automatic Switching Cabinet

On-grid / Off-grid / 100–250 kVA

- On & Off-grid switching < 20 ms, support backup Load
- Integrated EMS, supports multiple operation modes
- Integrated Off-grid isolation transformer
- Supports multi-source access to Grid & PCS & DG power

Block Diagram:

STS100D CABINET

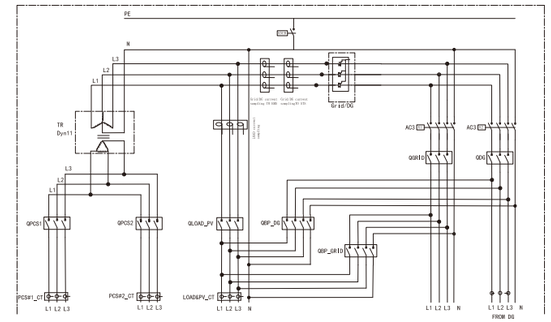

STS250D CABINET

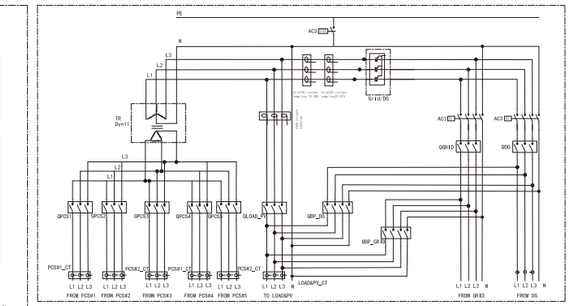

Parameter	STS100D	STS250D
Rated Voltage	400 V	400 V
Rated Current	217 A	536 A
PCS Rated Current	144 A	360 A
Rated Frequency	50 / 60 Hz	50 / 60 Hz
PCS Rated Power	100 kVA	250 kVA
Max. Grid Input Power	150 kVA	370 kVA
Switch Time Between On / Off-grid	≤ 20 ms	≤ 20 ms
PCS Input Breaker	125 A x 2	125A x 5 / 250A x 2*
Max. Grid Input Breaker	250 A	630 A
DG Input Breaker	250 A	630 A
Load Breaker	250 A	630 A
Grid / DG Bypass Breaker	250 A	630 A x 2
Isolation Transformer	100 kVA	250 kVA
Lightning Protection	Type II	Type II
Protection Degree	IP54	IP54
Relative Humidity	0 ~ 100%	0 ~ 100%
Operating Temperature	-25°C ~ +45°C	-25°C ~ +45°C
Cooling Type	Air Cooling	Air Cooling
Dimensions (W x H x D)	900 x 2380 x 930 mm	1300 x 2380 x 930 mm
Weight	950 kg	1640 kg
Operating Altitude	≤ 3000 m	≤ 3000 m
Communication	RS-485 / 4G / Ethernet	RS-485 / 4G / Ethernet
Installation	Tower - type	Tower - type

* One STS100D can be connected to a maximum of two KAC50DP.
** STS250D can connect a maximum of five KAC50DP, and the STS250D-B is designed to connect a maximum of two KAC125DH units (following the same schematic as the STS100D).