EMS01D
Second-level EMS Communication Box

- Dual power source, 220 VAC and 24 VDC for higher reliability
- Support remote monitoring via Ethernet / WiFi / 4G, and local monitoring via web page
- IP65 outdoor design
- Up to 20 portals available for southbound communication interfaces
- Various accessible interfaces including DI / DO, USB, SD, RS-485
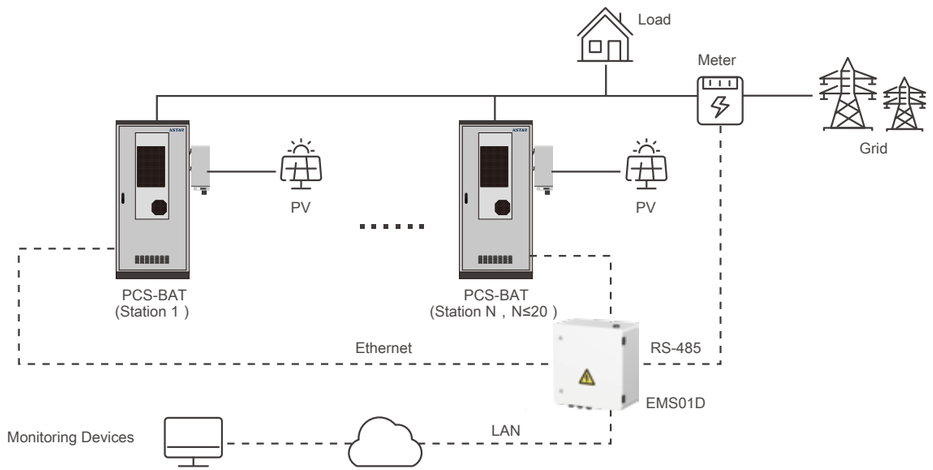
MODEL	EMS01D
Southbound Communication	
Southbound EMS Communication Method	Ethernet (Electrical)
Max. Number of Southbound EMS	20
Max. Distance of Southbound Communication	100 m
Ethernet Port Parameter	10 / 100 Mbps Adaptive
Northbound Communication	
Northbound Communication Method (Default)	Ethernet (Electrical / Optical Fiber)
Northbound Communication Method (Optional)	WLAN / 4G
Local Display	Embedded Web
Indicator Lights	Power, Running, Fault + Ethernet Status Indicators
Port Parameter	
Number of RS-485 Interfaces	7
USB Interface	1 with USB2.0
SD Interface	1
Digital Input Detection Interface	8
Digital Output Control Interface	4, NO + NC
Indicator Lights	Power, Running, Fault + Ethernet Status Indicators
Environmental Parameters	
Operating Temperature Range	-30℃ ~ +55℃
Storage Temperature Range	-40℃ ~ +70℃
Operating Relative Humidity	5% ~ 95% (No condensation)
Electrical Parameters	
Power Supply	DC / AC Redundant Power Supply
AC Power Supply Voltage Range	90 ~ 264 Vac
DC Power Supply Voltage Range	13 ~ 36 Vdc
Standby Power Consumption	< 40 W
Mechanical Parameters	
O&M Method	Front Panel Access
Dimensions (W x H x D)	560 x 600 x 300 mm
Weight	35 kg
IP Degree	IP65
Installation Method	Wall / Bracket / Floor Mounted
Certification & Standard	EN55032, EN IEC 61000-3-2, EN 61000-3-3, EN 55035, ETSI EN 301511, ETSI EN 301489, ETSI EN 300328, ETSI EN 300906, EN 62368-1, EN 50665, EN 62311