SENMARCK ENERGY

MC Cube-T ESS

System Features

High Energy Density

- Compact mechanical design, minimized footprint

Safe & Long Lifecycle

- High efficient system with safe and long lifecycle LFP battery

Highly Integrated

- Highly integrated system to allow flexible transportation and on-site installation
- All-in-One design, integrated local controller, HVAC and FSS to ensure system safety

Circuit Diagram

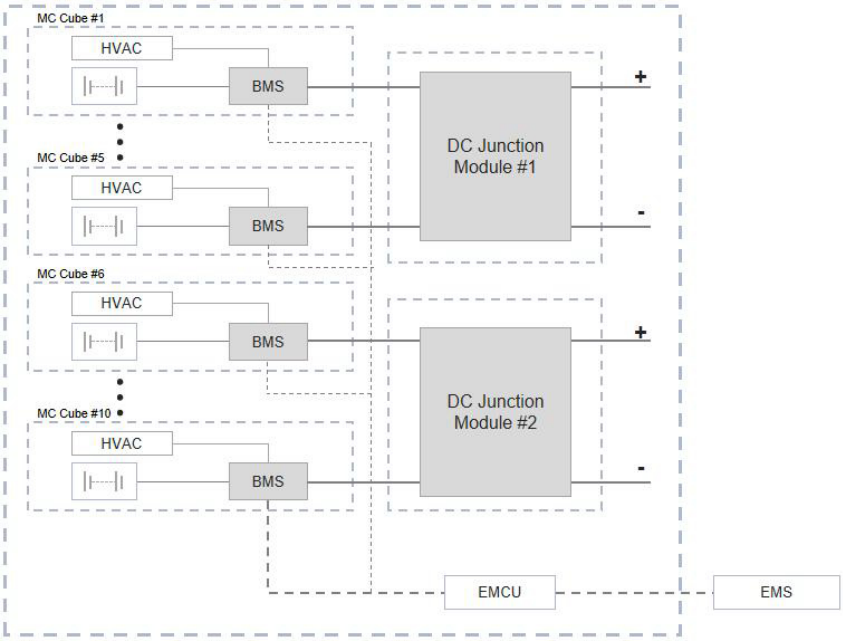

SENMARCK ENERGY

System Parameter

System Type	SEN-B501-E-RM2	SEN-B4008-E-RM2	SEN-B5010-E-RM"
DC Data			
Cell type	LFP	LPF	LFP
System configuration	1P416S	2×4×1P416S	2×5×1P416S
Battery capacity @BOL	501kWh	4008kWh	5010kWh
DC usable energy @FAT	501kWh	4008kWh	5010kWh
DC usable energy @1 month SAT	496kWh	3968kWh	4960kWh
DC usable energy @3 months SAT	491kWh	3928kWh	4910kWh
Battery voltage range	1123.2в1476.8V DC	1123.2в1476.8V DC	1123.2в1476.8V DC
Nominal power	250.5kW	2×1002kW	2×1252.5kW
General Data			
Dimensions (W×D×H)	1130*1203*2521mm	6058*2438*2896mm	6058*2438*2896mm
Weight	4030kg	36000kg	44000kg
IP rating	IP55	IP55	IP55
Ambient operating temperature range	-30˚Cв+55˚C[1]	-30˚Cв+55˚C[1]	-30˚Cв+55˚C[1]
Relative humidity	5%в100%	5%в100%	5%в100%
Max. working altitude	‘3000m[2]	‘3000m[2]	‘3000m[2]
Cooling concept	Liquid cooling	Liquid cooling	Liquid cooling
Noise	≤75dBA	≤75dBA	≤75dBA
Fire suppression system	With fire alarm system┌With Aerosol		
Auxiliary power interface	380V-480VAC~50/60Hz; 3P4W&DC24V	380V-480VAC~50/60Hz; 3P4W	380V-480VAC~50/60Hz; 3P4W
Auxiliary system peak power requirement @45˚C, PF0.8	6.5kVA	56kVA	69kVA
Communication protocols	CAN	Modbus TCP/IP	Modbus TCP/IP
Standard color	RAL 9003	RAL 9003	RAL 9003

Note:

[1] Power derating is performed when the ambient temperature is below -15˚C or above +45˚C.

[2] Power derating is performed when the altitude is between 2000-3000m.