# STS100D / STS250D Automatic Switching Cabinet

On-grid / Off-grid / 100–250 kVA

- On & Off-grid switching < 20 ms, support backup Load
- Integrated EMS, supports multiple operation modes
- Integrated Off-grid isolation transformer
- Supports multi-source access to Grid & PCS & DG power

## Block Diagram:

STS100D CABINET

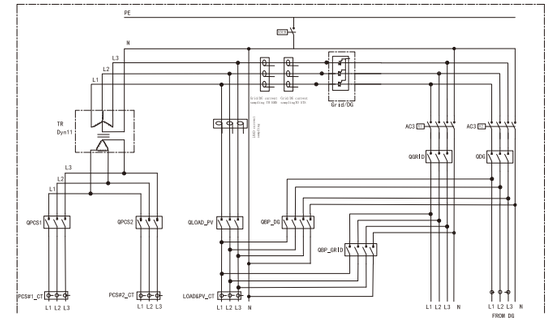

STS250D CABINET

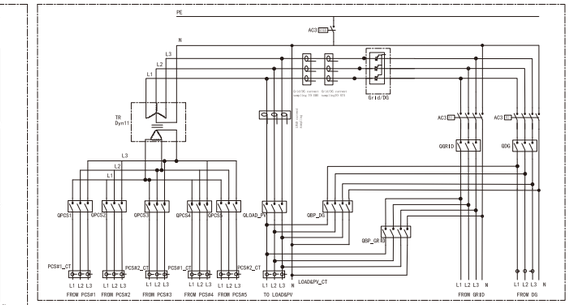

| Parameter | STS100D | STS250D |
|---|---|---|
| Rated Voltage | 400 V | 400 V |
| Rated Current | 217 A | 536 A |
| PCS Rated Current | 144 A | 360 A |
| Rated Frequency | 50 / 60 Hz | 50 / 60 Hz |
| PCS Rated Power | 100 kVA | 250 kVA |
| Max. Grid Input Power | 150 kVA | 370 kVA |
| Switch Time Between On / Off-grid | ≤ 20 ms | ≤ 20 ms |
| PCS Input Breaker | 125 A x 2 | 125A x 5 / 250A x 2* |
| Max. Grid Input Breaker | 250 A | 630 A |
| DG Input Breaker | 250 A | 630 A |
| Load Breaker | 250 A | 630 A |
| Grid / DG Bypass Breaker | 250 A | 630 A x 2 |
| Isolation Transformer | 100 kVA | 250 kVA |
| Lightning Protection | Type II | Type II |
| Protection Degree | IP54 | IP54 |
| Relative Humidity | 0 ~ 100% | 0 ~ 100% |
| Operating Temperature | -25°C ~ +45°C | -25°C ~ +45°C |
| Cooling Type | Air Cooling | Air Cooling |
| Dimensions (W x H x D) | 900 x 2380 x 930 mm | 1300 x 2380 x 930 mm |
| Weight | 950 kg | 1640 kg |
| Operating Altitude | ≤ 3000 m | ≤ 3000 m |
| Communication | RS-485 / 4G / Ethernet | RS-485 / 4G / Ethernet |
| Installation | Tower - type | Tower - type |

* One STS100D can be connected to a maximum of two KAC50DP.
** STS250D can connect a maximum of five KAC50DP, and the STS250D-B is designed to connect a maximum of two KAC125DH units (following the same schematic as the STS100D).