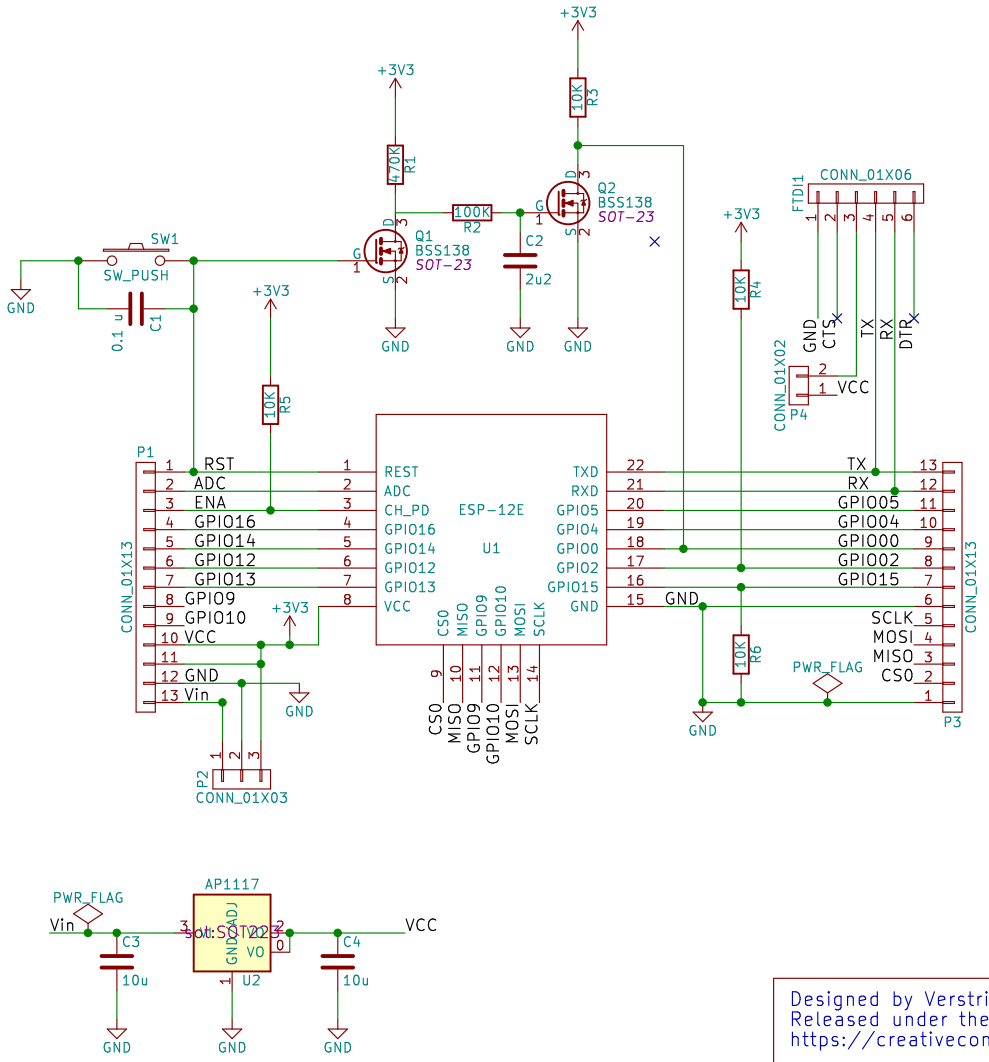

Designed by Verstringe K.
Released under the Creative Commons Attribution Share-Alike 4.0 License
https://creativecommons.org/licenses/by-sa/4.0/

Sheet: /
File: ESP8266-12_breakout.sch

Title: ESP8266-12 and ESP8266-12E breakout board with reset

Size: A4	Date: 20/11/2015	**Rev:** A
KiCad E.D.A. kicad 4.0.1-stable		Id: 1/1