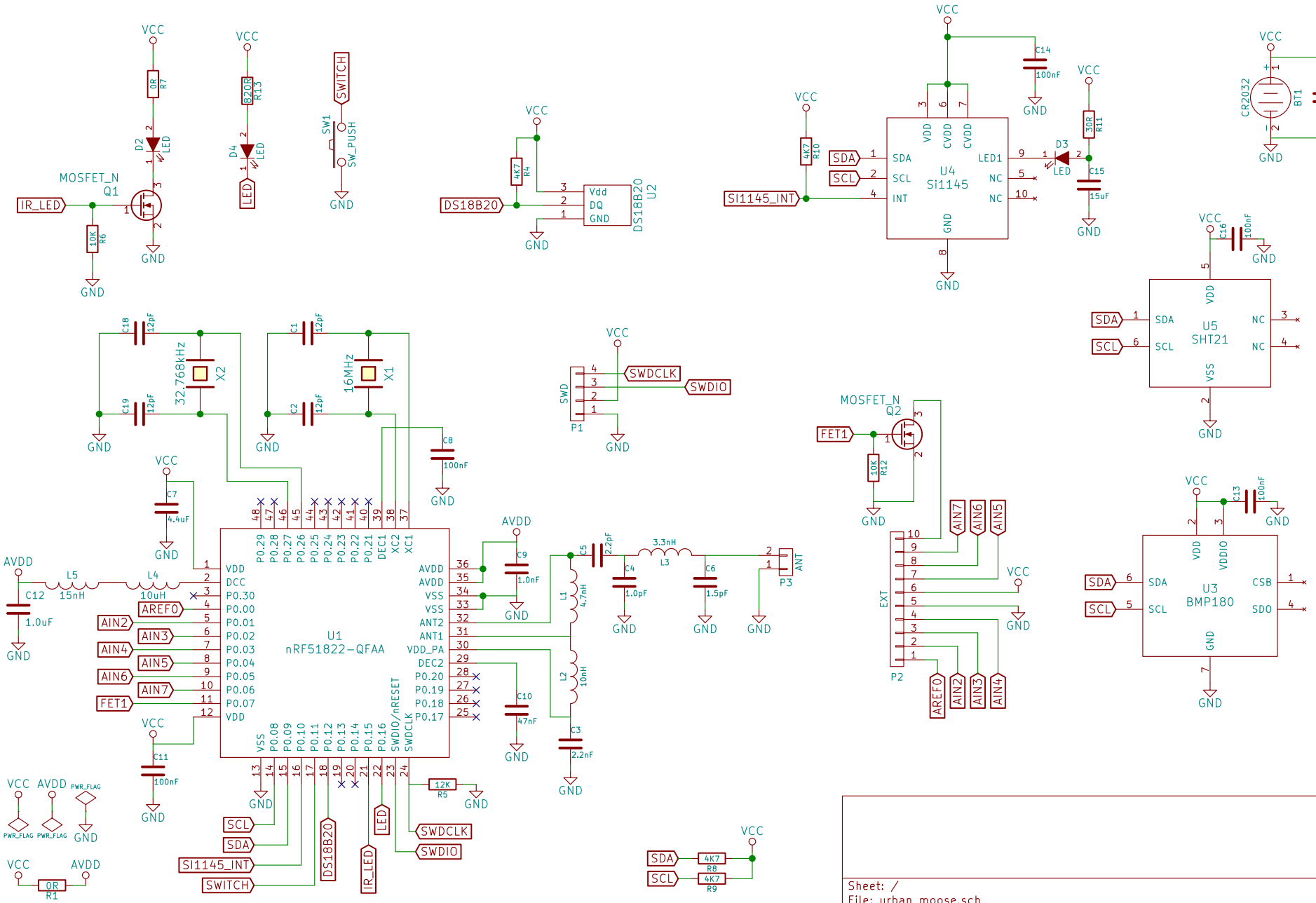

Sheet: /
File: urban_moose.sch

Title:

Size: A4	Date:	Rev:
KiCad E.D.A. kicad 0.201506192325+579523ubuntu14.04.1-product		Id: 1/1