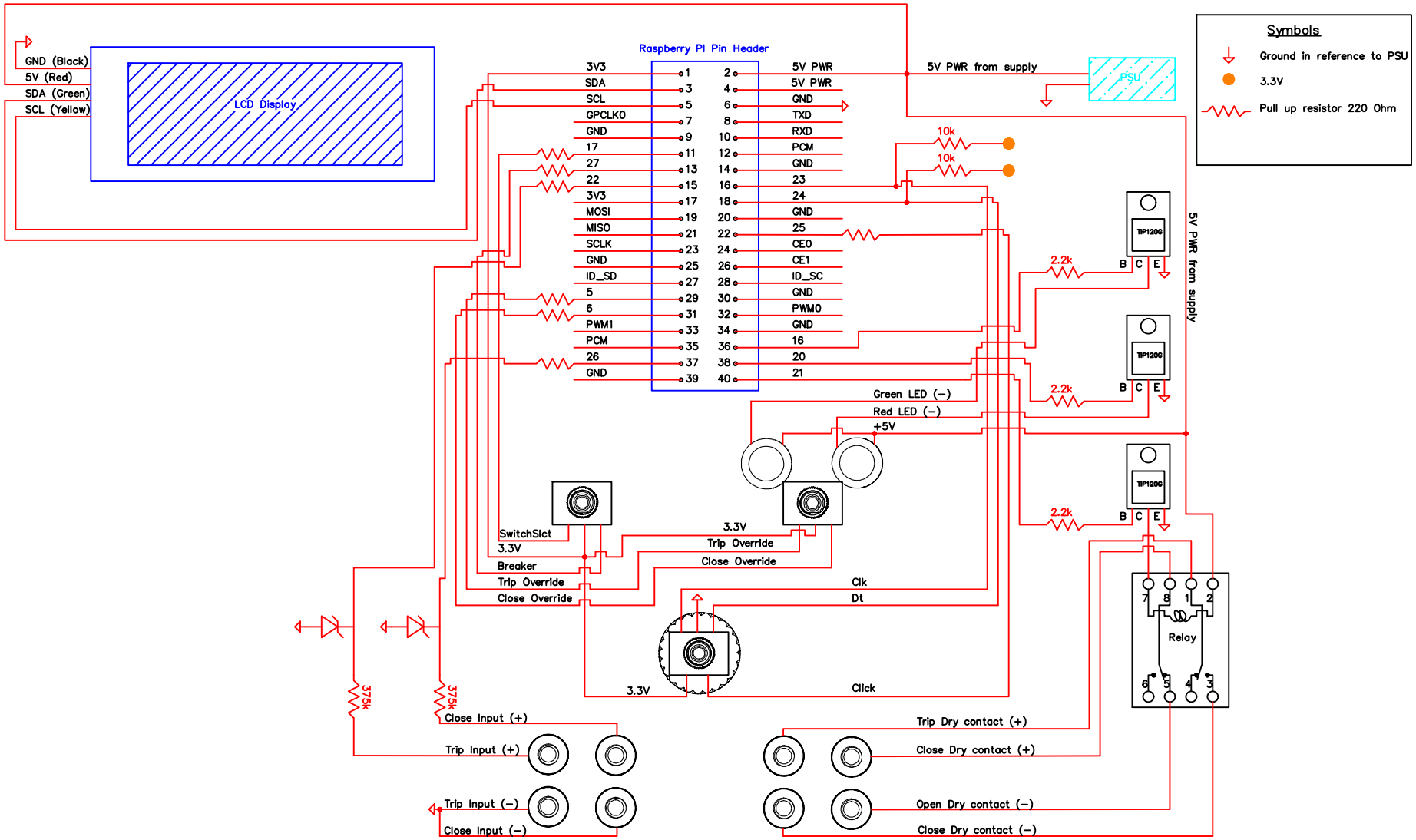

NOTES:

University of Washington
Bothell, WASHINGTON

DESIGNED BY	Capstone Team
DRAWN BY	Tim M. Kostersitz
CHECKED BY	
SCALE	NONE
DATE	12/23/2020

###

Sno PUD Dist.1 Everett, WA

DRAWING NO.	###
REV	1.1
SALES ORDER NUMBER	###
SHEET	1