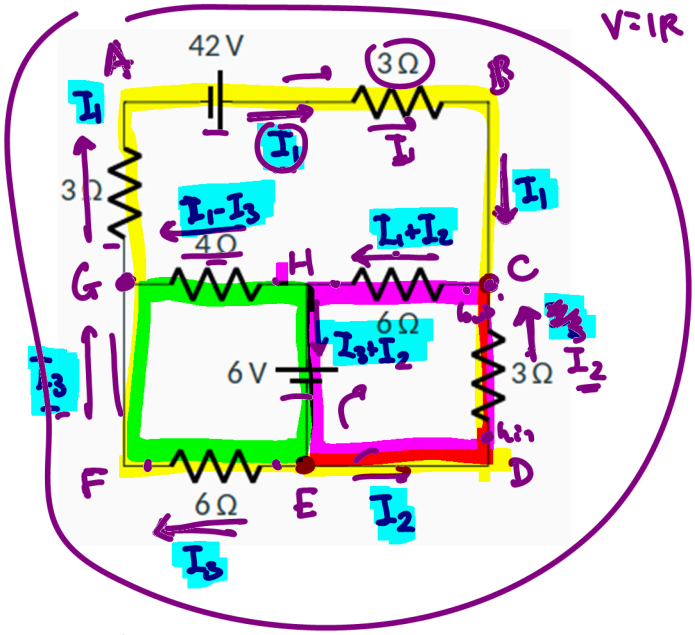

V=IR

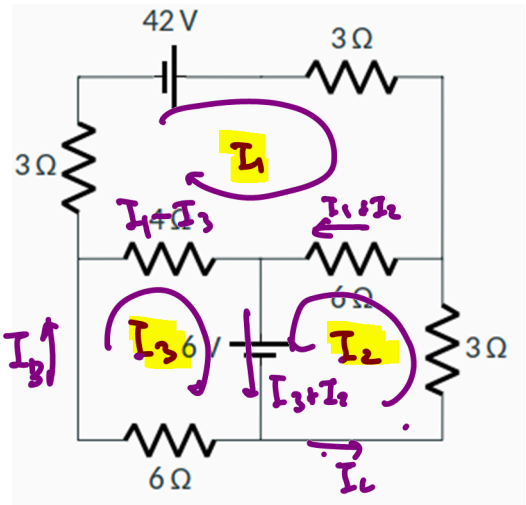

use KCL

path ABCDEFGA

path EHGFE

path EHCDE

Completely arbitrary

- 3 unknowns, need 3 loops to solve 3 equations

voltage drops if "current" in same direction as the loop.

voltage gain if current in opp. dir of the loop.

$+42 - 3I_1 + 3I_2 - 6I_3 - 3I_1 = 0$

$\boxed{2I_1 - I_2 + 2I_3 = 14}$

$I_1 =$ ___

$I_2 =$ ___

$I_3 =$ ___

$6 - 4(I_1 - I_3) + 6I_3 = 0$

$6 - 4I_1 + 4I_3 + 6I_3 = 0$

$10I_3 - 4I_1 = -6$

$\boxed{5I_3 - 2I_1 = -3}$

$6 + 6(I_1 + I_2) + 3I_2 = 0$

$6 + 6I_1 + 6I_2 + 3I_2 = 0$

$9I_2 + 6I_1 = -6 \rightarrow \boxed{3I_2 + 2I_1 = -2}$

if answers are negative, then reverse direction