Template Week 2 – Logic

Student number:591491

Assignment 2.1: Parking lot

Which gates do you need?

2 and gates of 1 and gate met 3 ingangen

Complete this table

Parking lot 1	Parking lot 2	Parking lot 3	Result (full)
0	0	0	0
0	0	1	0
0	1	0	0
1	0	0	0
0	1	1	0
1	0	1	0
1	1	0	0
1	1	1	1

Assignment 2.2: Android or iPhone

Which gates do you need?

Xor gate

Complete this table

Android phone	iPhone	Result (Phone in possession)
0	0	0
1	0	Android (1)
0	1	iPhone (1)
1	1	0

Assignment 2.3: Four NAND gates

Complete this table

A	B	Q
1	0	1
0	1	1
1	1	0
0	0	0

How can the design be simplified?

Xor gate.

Assignment 2.4: Getting to know Logisim evolution

Screenshot of the design with your name and student number in it:

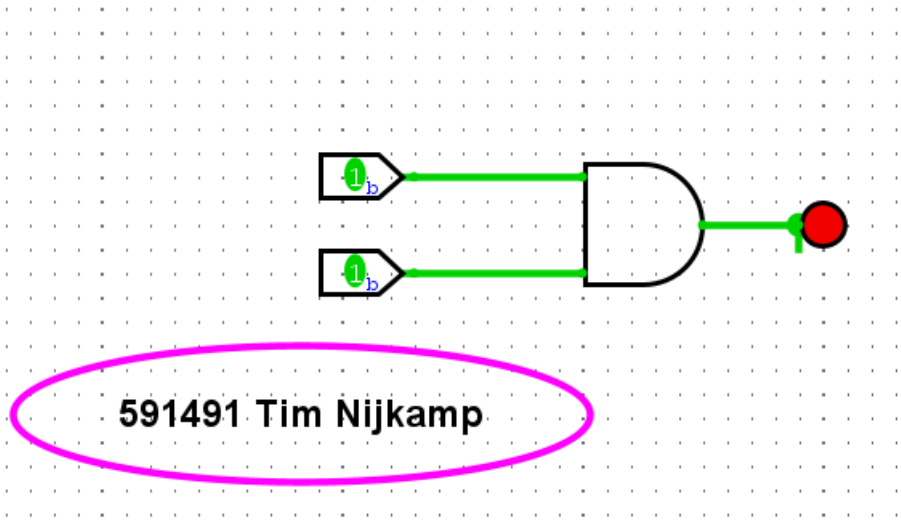

Assignment 2.5: SR Latch

Screenshot SR Latch in Logisim with your name and student number:

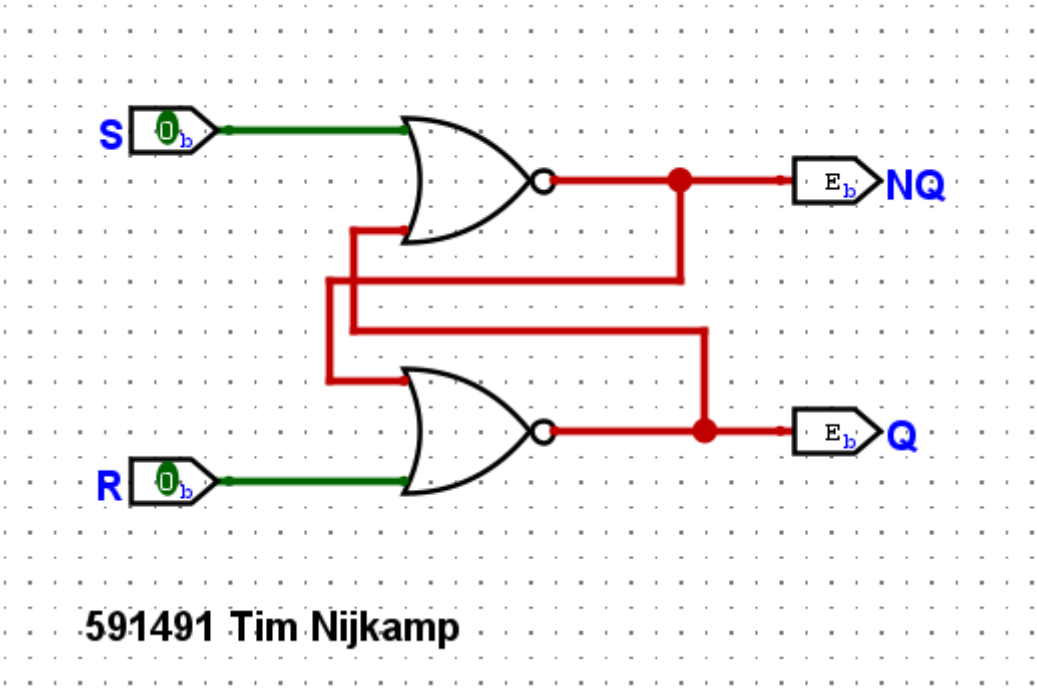

Assignment 2.6: Vending Machine

Screenshot Vending Machine in Logisim with your name and student number:

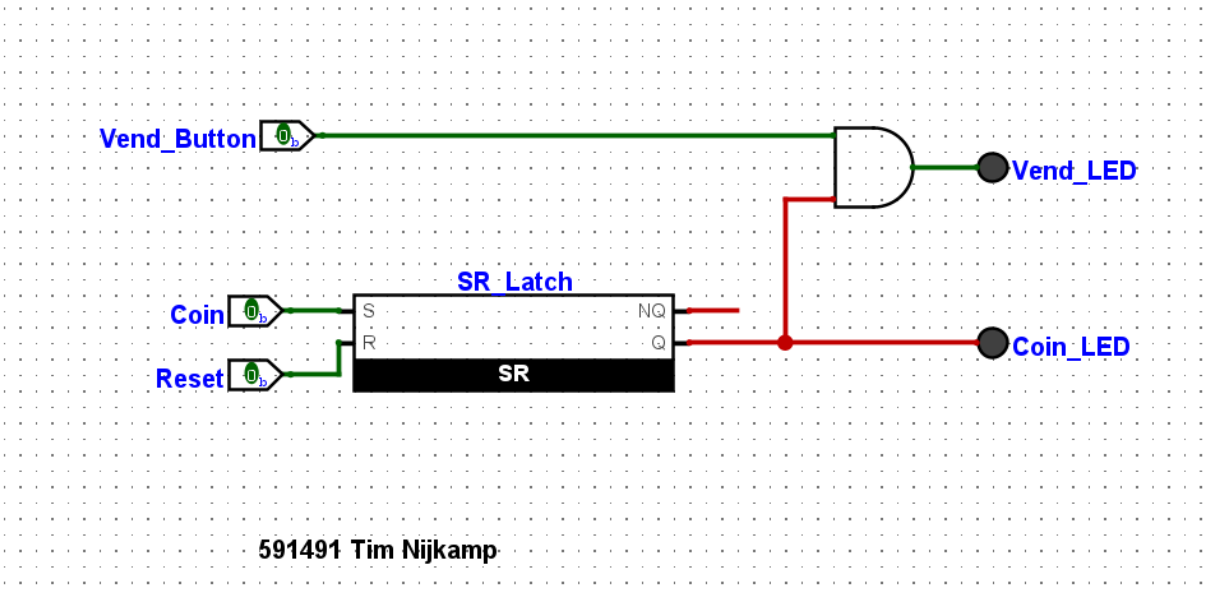

Assignment 2.7: Bitwise operators

Complete the java source code for bitwise operators. Put the source code here.

```
public class Main {
   public static void main(String[] args) {
      int number = 5;
      if((number & 1) == 1) System.out.println("number is odd");
      else System.out.println("number is even");
   }
}
```

Assignment 2.8: Java Application Bit Calculations

Create a java program that accepts user input and presents a menu with options.

1. Is number odd?
2. Is number a power of 2?
3. Two's complement of number?

Implement the methods by using the bitwise operators you have just learned.

Organize your source code in a readable manner with the use of control flow and methods.

Keep this application because you need to expand it in week 6 for calculating network segments.

Paste source code here, with a screenshot of a working application.

Wat moet ik doen met Two's complement? Wat moet ik laten zien? De vraag is me onduidelijk. Ik weet wat Two's complement is, alleen snap ik de vraag niet.

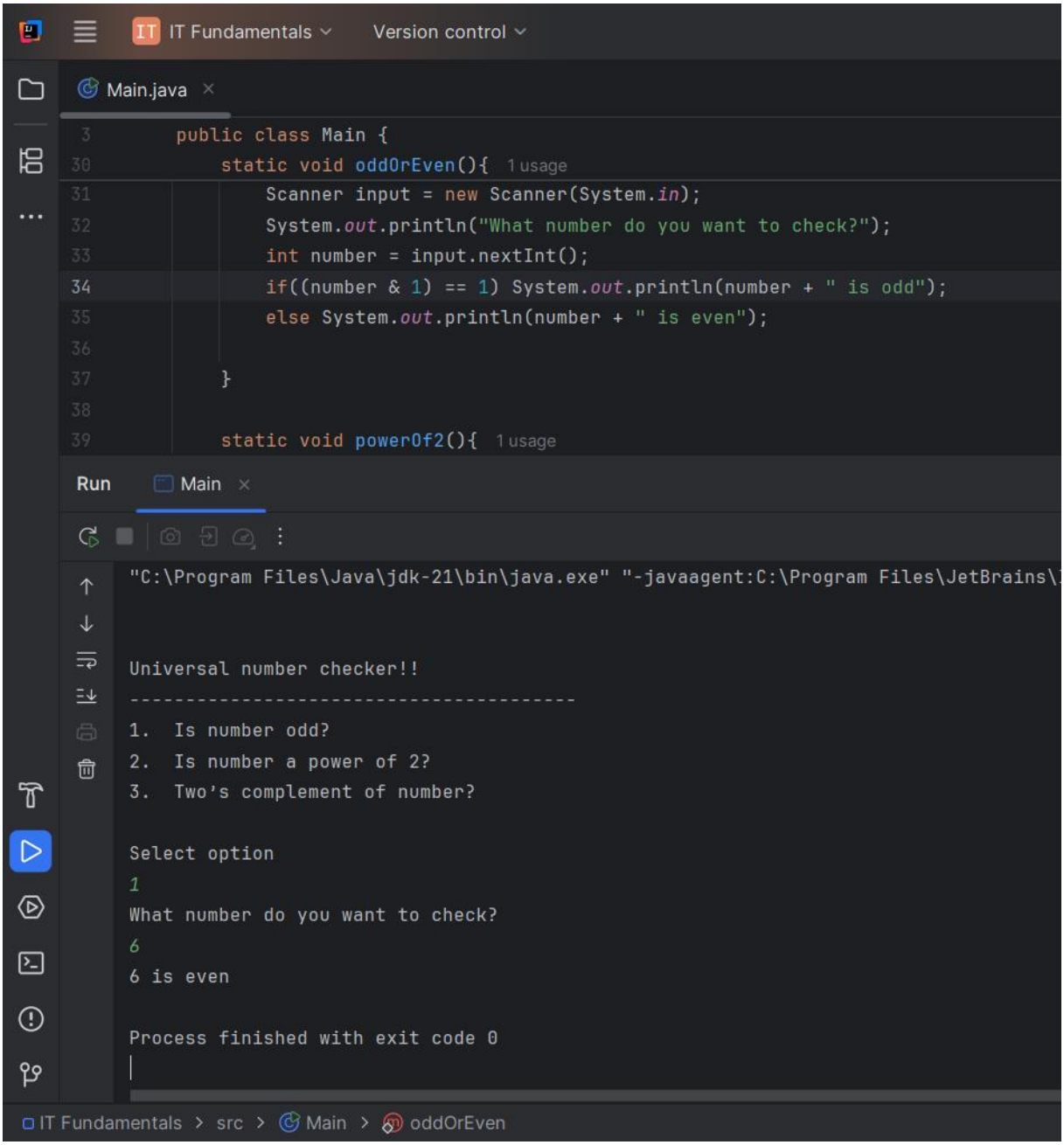


```
import java.util.Scanner;

public class Main {
   public static void main(String[] args) {
      System.out.println("\n\nUniversal number checker!!");
      System.out.println("----------------------------------------");
      System.out.println("1.\tIs number odd?\n" +
            "2.\tIs number a power of 2?\n" +
            "3.\tTwo's complement of number?\n");
      Scanner input = new Scanner(System.in);
      System.out.println("Select option");

      //Read input
      int number = input.nextInt();
```

```
        switch(number){
            case 1:
                oddOrEven();
                break;
            case 2:
                powerOf2();
                break;
            case 3:
                //myfunction
                break;
            default:
                System.out.println("Not a valid option");
        }
    }

    static void oddOrEven(){
        Scanner input = new Scanner(System.in);
        System.out.println("What number do you want to check?");
        int number = input.nextInt();
        if((number & 1) == 1) System.out.println(number + " is odd");
        else System.out.println(number + " is even");

    }

    static void powerOf2(){
        Scanner input = new Scanner(System.in);
        System.out.println("What number do you want to check?");
        int number = input.nextInt();
        if(number > 1 && (number & (number - 1)) == 0) System.out.println("number is a power of 2");
        else System.out.println("number isn't a power of 2");
    }

}
```

Ready? Then save this file and export it as a pdf file with the name: **week2.pdf**