Template Week 3 – Hardware

Student number: 591491

Assignment 3.1: Examine your phone

What processor is in your phone?

A18 pro

To which architecture family does this processor belong? In other words, which Instruction Set Architecture (ISA) is used?

RISC ARM64

How much RAM is in it?

8GB

How much storage does your phone have?

256GB

What operating system is running on your phone?

iOS

Approximately how many applications do you have installed?

117

Which application do you use the most?

Whatsapp, snapchat, discord, clash royale ongeveer net zo veel

Can your phone be charged with what type of plug?

USB Type-C

Which I/O ports can you visually see on your phone?

USB Type-C

Qua knoppen:

Volume omhoog

Volume omlaag

Actie knop

Aan/uit knop

Camera knop

Assignment 3.2: Examine your laptop

What processor is in your laptop?

Intel i7 12700h

To which architecture family does this processor belong? In other words, which Instruction Set Architecture (ISA) is used?

CISC X86/64bit

How much RAM is in it?

16GiB

How much storage does your laptop have?

512GB

Which operating system is running on your laptop?

Windows 11

Approximately how many applications do you have installed?

30 +-

Which application do you use the most?

Firefox

Can your laptop be charged with what type of plug?

Yes, it can be charged with an ac to dc plug and power adapter from dell.

Which I/O ports can you visually see on your laptop?

USB type-A x3

AUX jack plug

USB type-c thunderbolt 4

RJ45 ethernet aansluiting

HDMI-uitgang

Assignment 3.3: Power to the laptop

What is the input voltage?

20 volts

What is the output voltage?

5 volts

How many watts can your power adapter deliver?

240 Watt

Is the input voltage AC or DC?

DC

Is the output voltage AC or DC?

DC

AC/DC what is that?

AC is Alternating Current en is wisselspanning. DC is Direct Current en is direct stroom. DC heeft een plus en min en AC heeft dat niet.

If you reverse the polarity of the output voltage, is that bad for your laptop?

Ja, hij blaast waarschijnlijk iets op de printplaat op.

You forgot your power adapter, your laptop normally needs 15 watts. You will be loaned a power adapter that can deliver 50 watts. Voltage, polarity, etc. are all the same compared to the original power adapter. You can connect the borrowed power adapter to your laptop. What will happen? Also explain why you think that.

Hij laadt gewoon op. Als je laptop harder kan opladen dan met 15 watt zal hij ook veel sneller opladen. Ook kan hij iets warmer worden bij het opladen.

Assignment 3.4: Build your dream PC

Screenshots PC configuration + motivation:

https://pcpartpicker.com/list/YBJMGJ

Ryzen 7 9800x3d als hele snelle en sterke processor.

Gekoppeld met een RTX5090 die graphisch heel sterk is in graphische rekenkracht.

Gekoppeld met genoeg ram en een goede voeding is het een van de sterkste computers die je nu kan maken.

Assignment 3.5: Adders

Complete the **half adder**, **full adder** and **4-bit adder** assignment as described in the PowerPoint slides of week 3 in Logisim. Save the chip design and also export three PNG pictures of the separate finished designs. See the PowerPoint slides of week 3.

Paste the three exported PNG pictures in here.

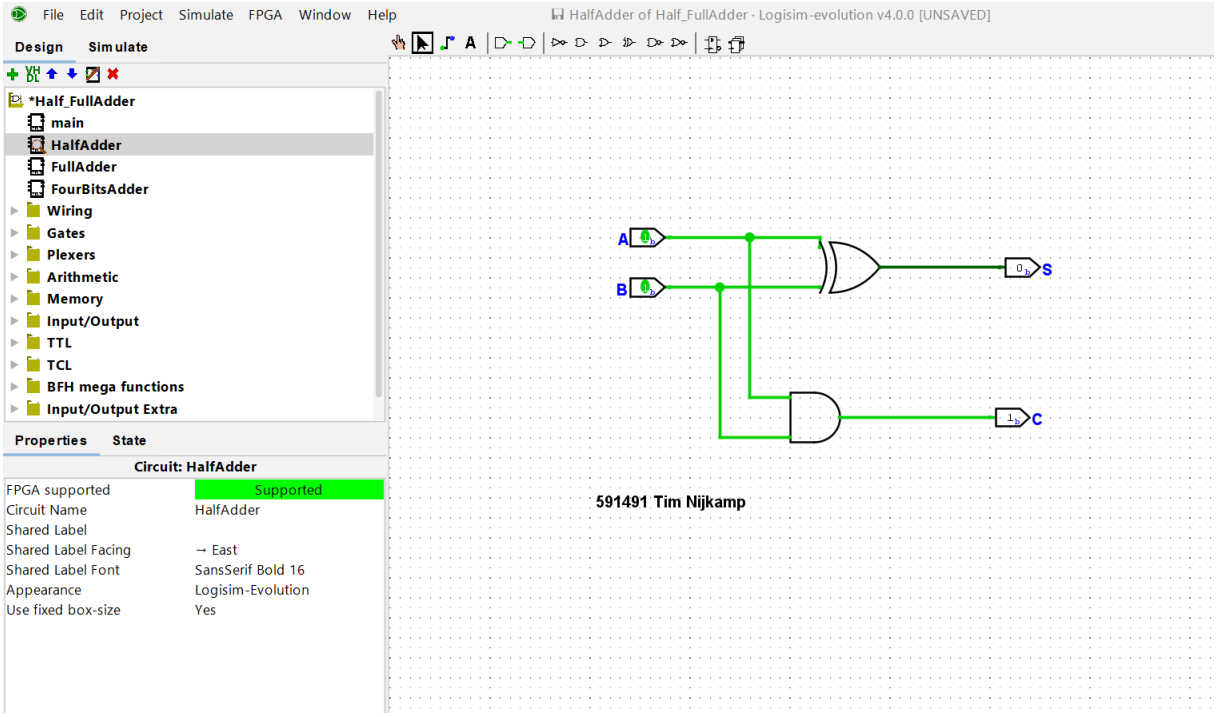

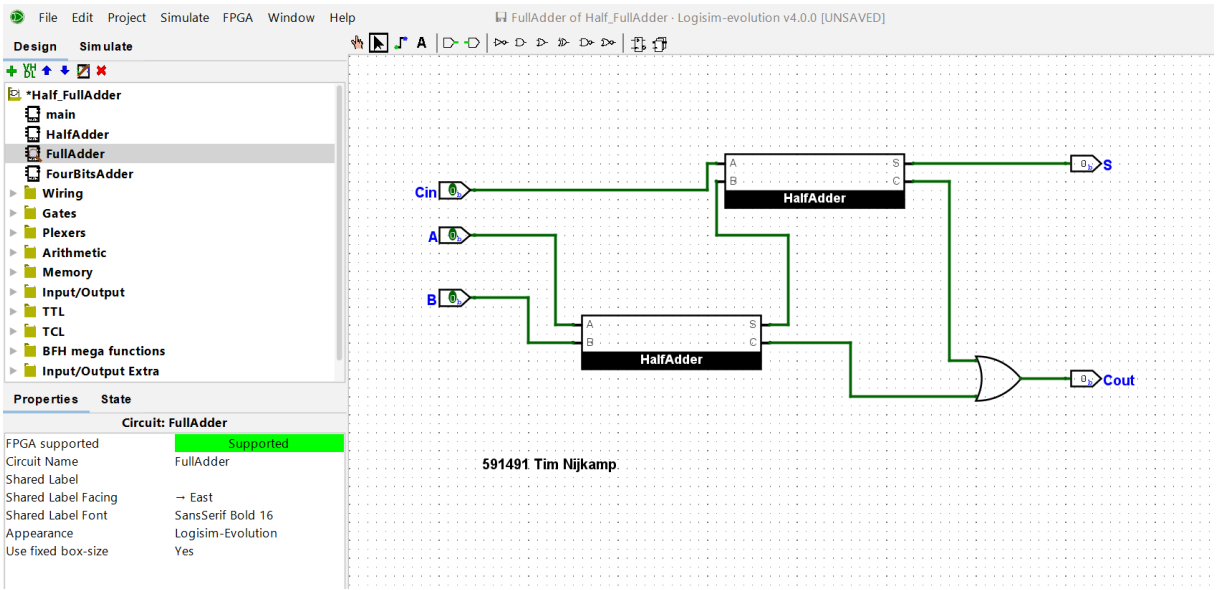

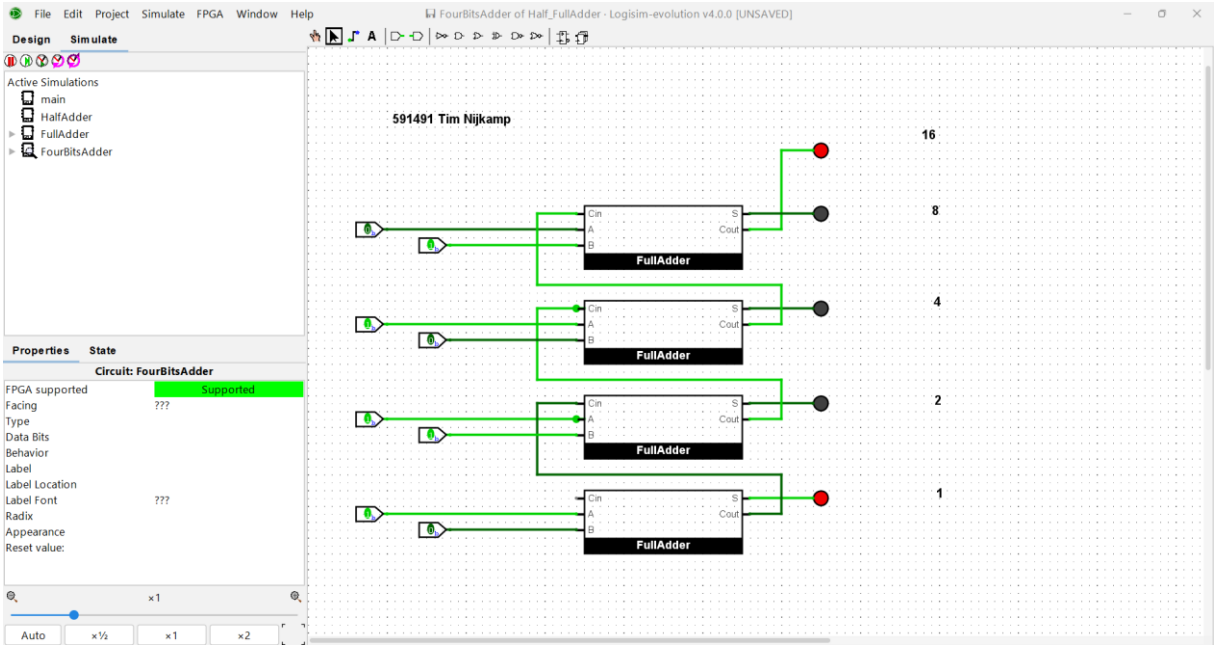

Ready? Save this file and export it as a pdf file with the name: **week3.pdf**