Template Week 2 – Logic

Student number:591491

Assignment 2.1: Parking lot

Which gates do you need?

3 and gates

of 1 and gate met 3 ingangen

Complete this table

Parking lot 1	Parking lot 2	Parking lot 3	Result (full)
0	0	0	0
0	0	1	0
0	1	0	0
1	0	0	0
0	1	1	0
1	0	1	0
1	1	0	0
1	1	1	1

Assignment 2.2: Android or iPhone

Which gates do you need?

Xor gate

Complete this table

Android phone	iPhone	Result (Phone in possession)
0	0	0
1	0	Android (1)
0	1	iPhone (1)
1	1	0

Assignment 2.3: Four NAND gates

Complete this table

A	B	Q
1	0	1
0	1	1
1	1	0
0	0	0

How can the design be simplified?

Xor gate.

Assignment 2.4: Getting to know Logisim evolution

Screenshot of the design with your name and student number in it:

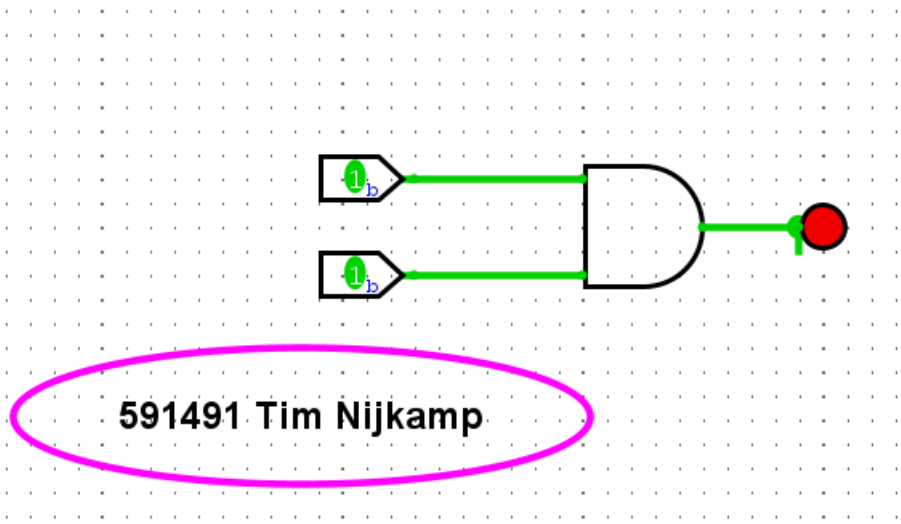

Assignment 2.5: SR Latch

Screenshot SR Latch in Logisim with your name and student number:

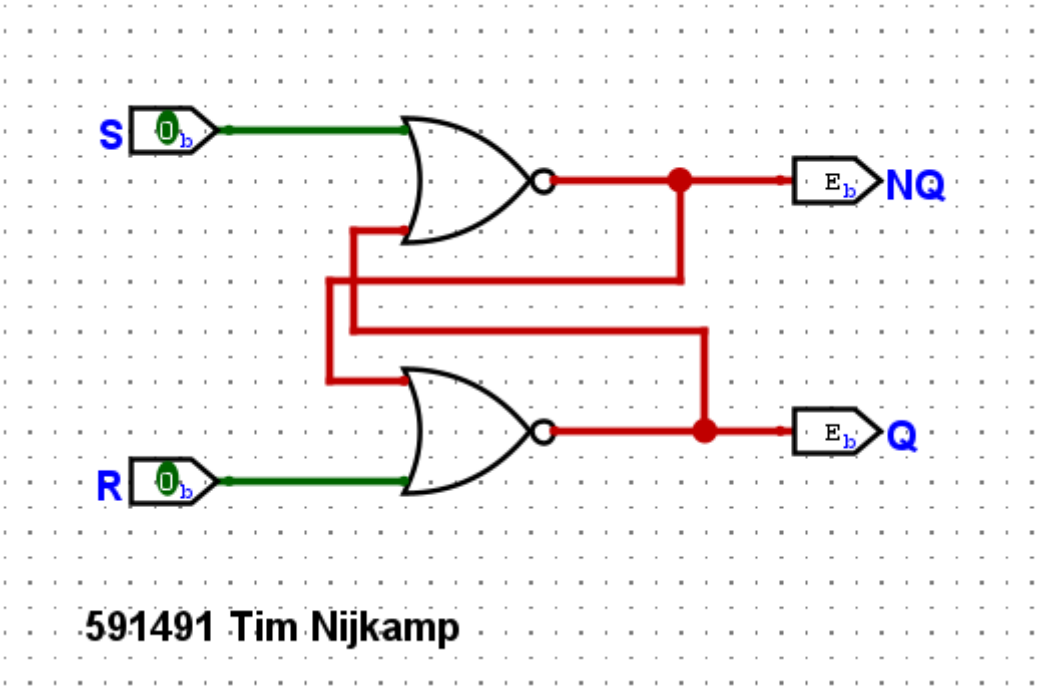

Assignment 2.6: Vending Machine

Screenshot Vending Machine in Logisim with your name and student number:

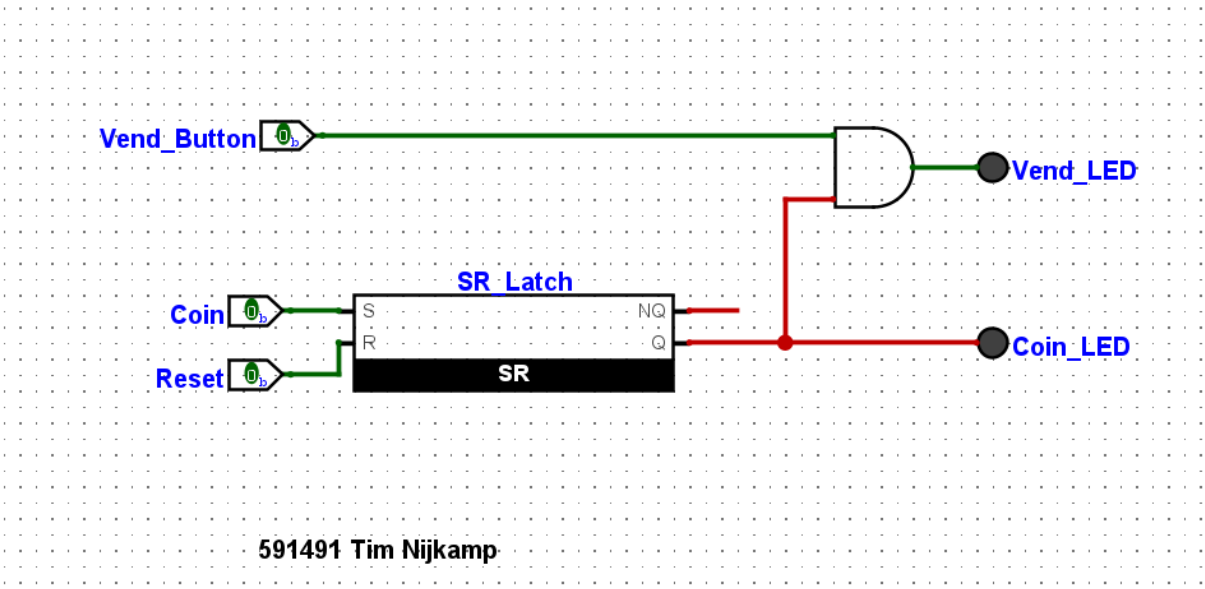

Assignment 2.7: Bitwise operators

Complete the java source code for bitwise operators. Put the source code here.

```
public class Main {
   public static void main(String[] args) {
      int number = 5;
      if((number & 1) == 1) System.out.println("number is odd");
      else System.out.println("number is even");
   }
}
```

Assignment 2.8: Java Application Bit Calculations

Create a java program that accepts user input and presents a menu with options.

1. Is number odd?
2. Is number a power of 2?
3. Two's complement of number?

Implement the methods by using the bitwise operators you have just learned.

Organize your source code in a readable manner with the use of control flow and methods.

Keep this application because you need to expand it in week 6 for calculating network segments.

Paste source code here, with a screenshot of a working application.

IT Fundamentals Version control

Main.java

```java
3       public class Main {
30          static void oddOrEven(){  1 usage
31              Scanner input = new Scanner(System.in);
32              System.out.println("What number do you want to check?");
33              int number = input.nextInt();
34              if((number & 1) == 1) System.out.println(number + " is odd");
35              else System.out.println(number + " is even");
36
37          }
38
39          static void powerOf2(){  1 usage
```

Run Main

```
"C:\Program Files\Java\jdk-21\bin\java.exe" "-javaagent:C:\Program Files\JetBrains\

Universal number checker!!
--------------------------------------
1.  Is number odd?
2.  Is number a power of 2?
3.  Two's complement of number?

Select option
1
What number do you want to check?
6
6 is even

Process finished with exit code 0
```

IT Fundamentals > src > Main > oddOrEven

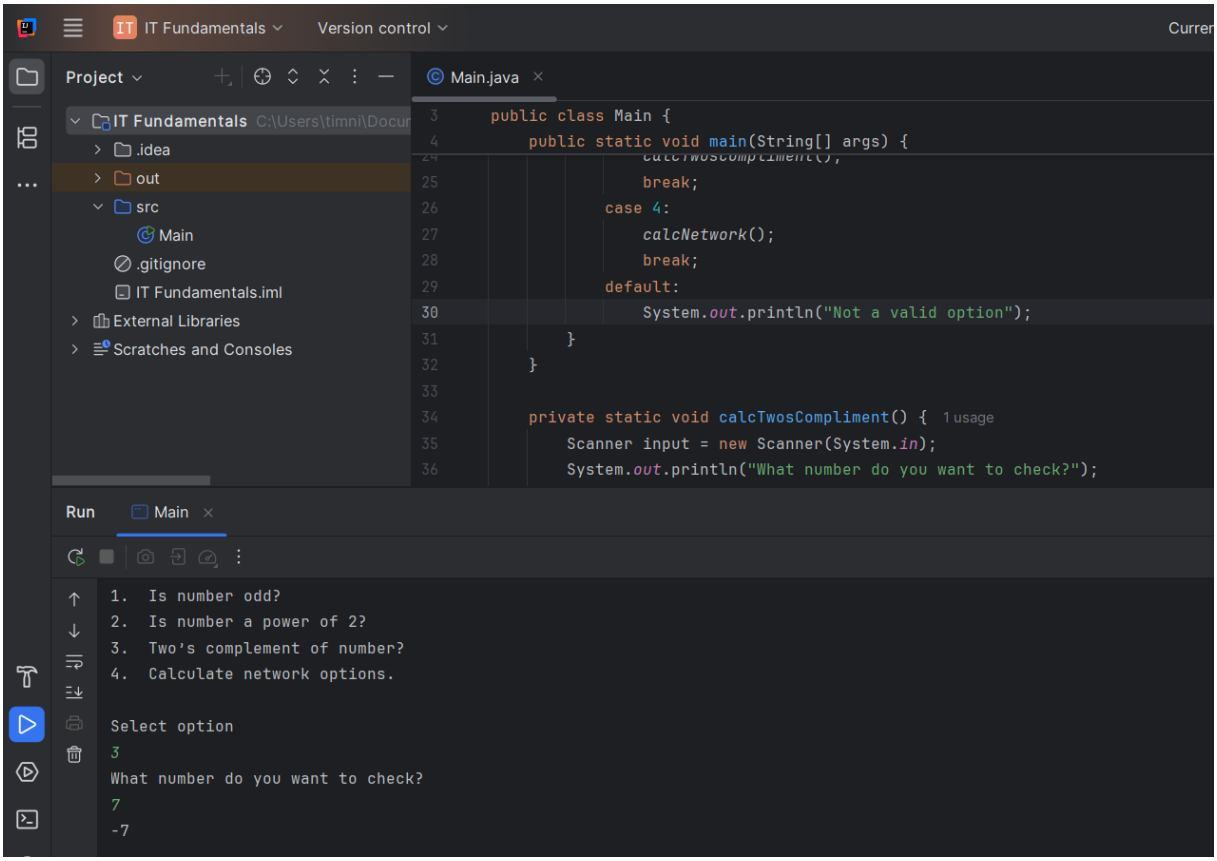


```
import java.util.Scanner;

public class Main {
   public static void main(String[] args) {
      System.out.println("\n\nUniversal number checker!!");
      System.out.println("----------------------------------------");
      System.out.println("1.\tIs number odd?\n" +
            "2.\tIs number a power of 2?\n" +
            "3.\tTwo's complement of number?\n" +
            "4.\tCalculate network options.\n");
      Scanner input = new Scanner(System.in);
      System.out.println("Select option");

      //Read input
      int number = input.nextInt();
      switch(number){
         case 1:
            oddOrEven();
            break;
         case 2:
            powerOf2();
            break;
         case 3:
            calcTwosCompliment();
            break;
```

```
        case 4:
            calcNetwork();
            break;
        default:
            System.out.println("Not a valid option");
    }
}

private static void calcTwosCompliment() {
    Scanner input = new Scanner(System.in);
    System.out.println("What number do you want to check?");
    int number = input.nextInt();
    number = ~number; //flip all the bits
    number++;
    System.out.println(number);
}

private static void calcNetwork() {
    Scanner input = new Scanner(System.in);
    System.out.println("Enter IP address with CIDR notation (192.168.1.1/24");

}

static void oddOrEven(){
    Scanner input = new Scanner(System.in);
    System.out.println("What number do you want to check?");
    int number = input.nextInt();
    if((number & 1) == 1) System.out.println(number + " is odd");
    else System.out.println(number + " is even");

}

static void powerOf2(){
    Scanner input = new Scanner(System.in);
    System.out.println("What number do you want to check?");
    int number = input.nextInt();
    if(number > 1 && (number & (number - 1)) == 0) System.out.println("number is a power of 2");
    else System.out.println("number isn't a power of 2");
}

}
```

Ready? Then save this file and export it as a pdf file with the name: **week2.pdf**