# MIPS Structure II
# Multicycle Architecture

# From Single Cycle to Multicycle

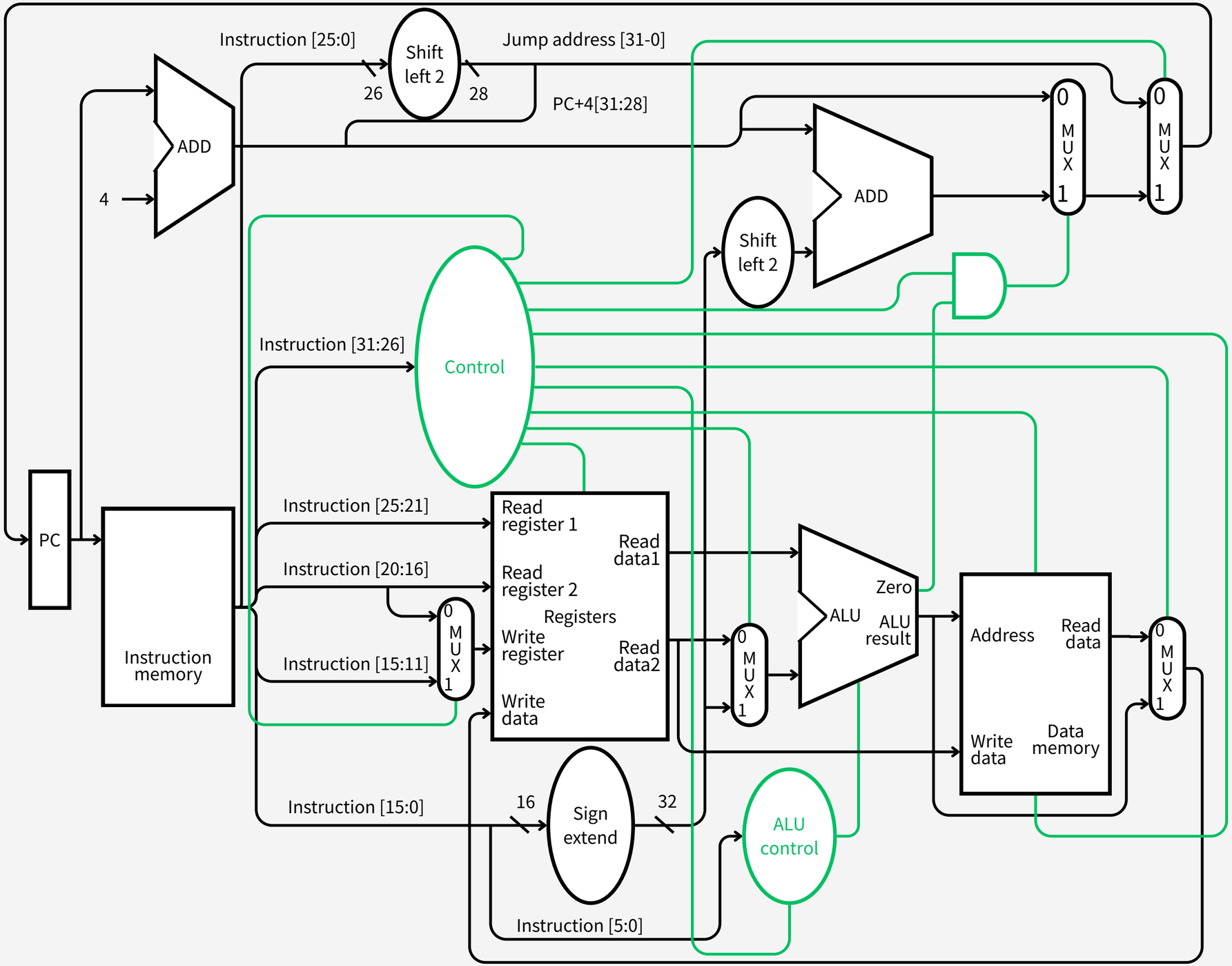
Instruction [25:0]
Shift left 2
Jump address [31-0]
26
28
PC+4[31:28]
ADD
4
ADD
Shift left 2
0
M
U
X
1
0
M
U
X
1
Control
Instruction [31:26]
PC
Instruction memory
Instruction [25:21]
Instruction [20:16]
Instruction [15:11]
Read register 1
Read register 2
Registers
Write register
Write data
Read data1
Read data2
0
M
U
X
1
0
M
U
X
1
ALU
Zero
ALU result
Address
Read data
Write data
Data memory
0
M
U
X
1
Instruction [15:0]
16
Sign extend
32
ALU control
Instruction [5:0]

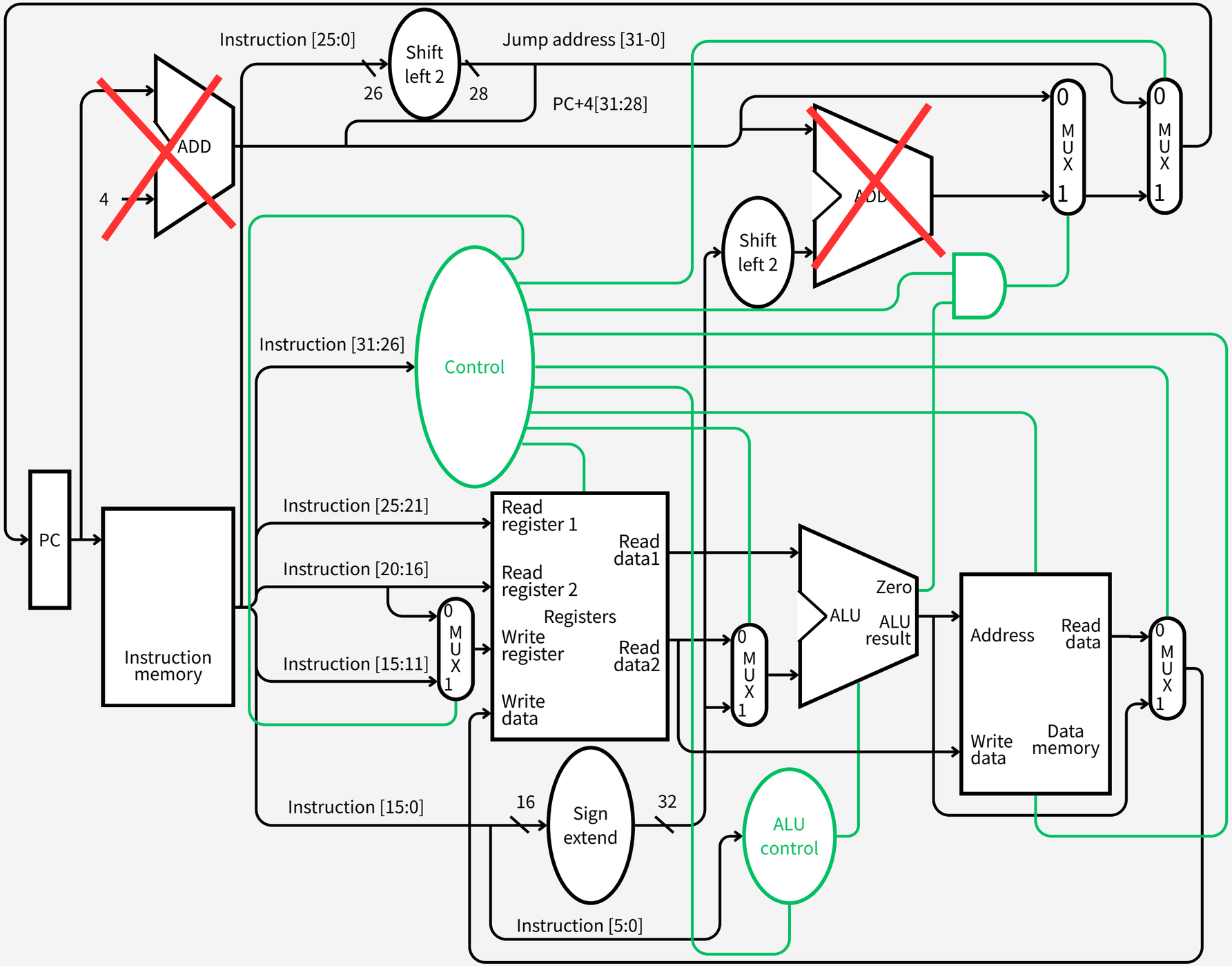
Instruction [25:0]
Shift left 2
Jump address [31-0]
26
28
PC+4[31:28]
ADD
4
ADD
Shift left 2
0
M
U
X
1
0
M
U
X
1
Control
Instruction [31:26]
PC
Instruction memory
Instruction [25:21]
Instruction [20:16]
Instruction [15:11]
Read register 1
Read register 2
Registers
Write register
Write data
Read data1
Read data2
0
M
U
X
1
ALU
Zero
ALU result
0
M
U
X
1
Address
Read data
Write data
Data memory
0
M
U
X
1
Instruction [15:0]
16
Sign extend
32
ALU control
Instruction [5:0]

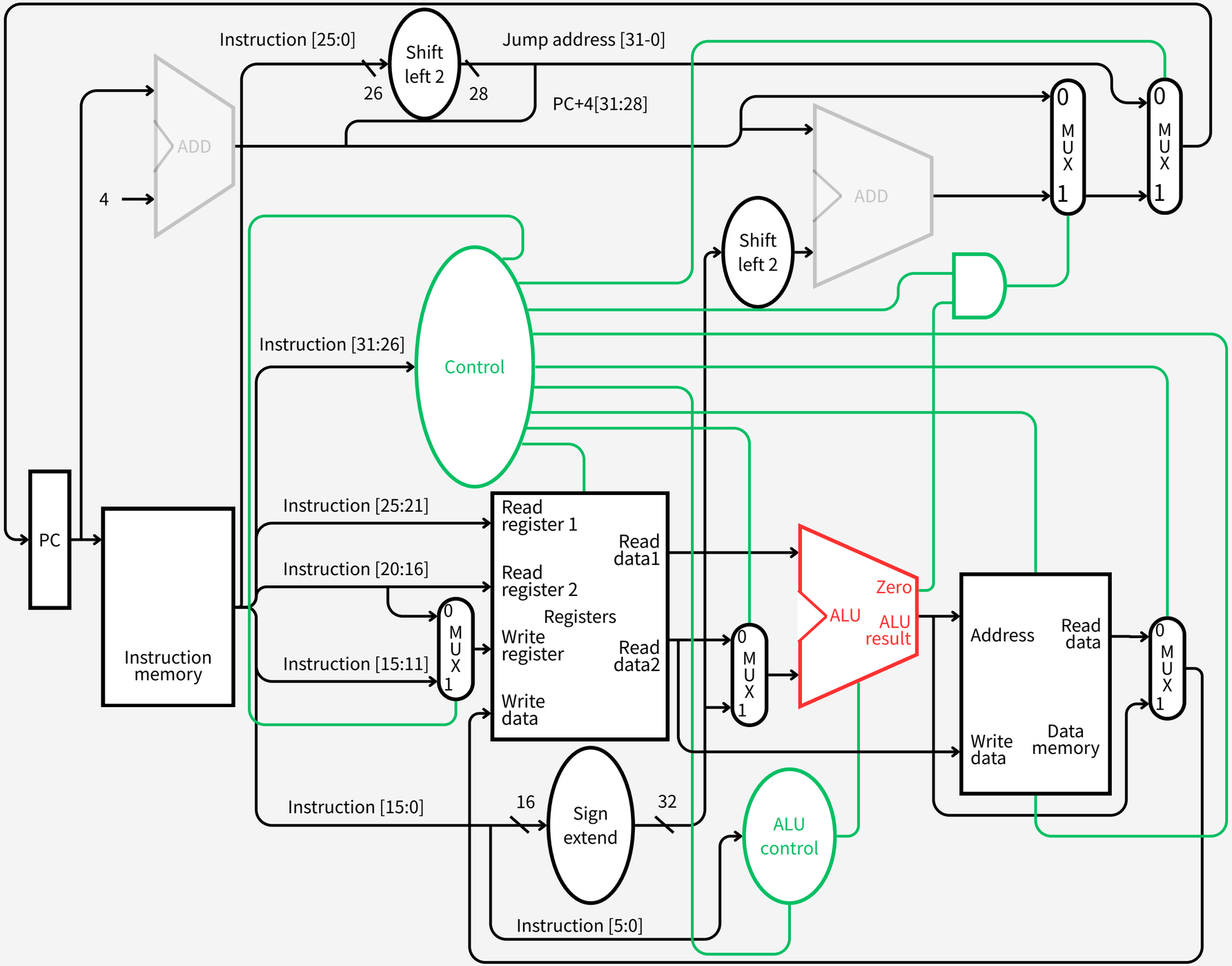
Instruction [25:0]
Shift left 2
Jump address [31-0]
26
28
PC+4[31:28]
ADD
4
ADD
Shift left 2
0
M
U
X
1
0
M
U
X
1
Control
Instruction [31:26]
PC
Instruction memory
Instruction [25:21]
Instruction [20:16]
Instruction [15:11]
Read register 1
Read register 2
Registers
Write register
Write data
Read data1
Read data2
0
M
U
X
1
0
M
U
X
1
ALU
Zero
ALU result
Address
Read data
Write data
Data memory
0
M
U
X
1
Instruction [15:0]
16
Sign extend
32
ALU control
Instruction [5:0]

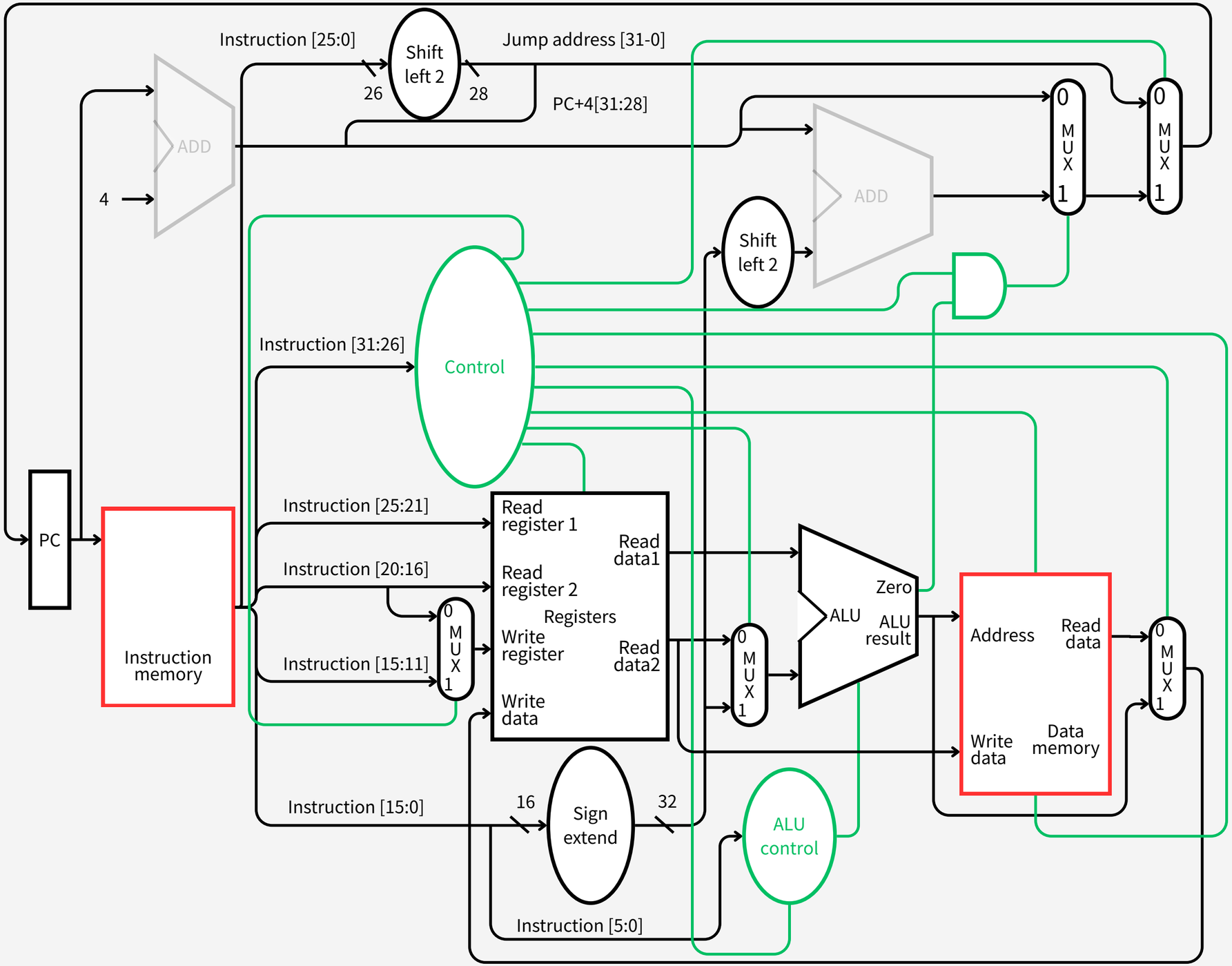
Instruction [25:0]
Shift left 2
Jump address [31-0]
26
28
PC+4[31:28]
ADD
4
ADD
Shift left 2
0
M
U
X
1
0
M
U
X
1
Control
Instruction [31:26]
PC
Instruction memory
Instruction [25:21]
Instruction [20:16]
Instruction [15:11]
Read register 1
Read register 2
Registers
Write register
Write data
Read data1
Read data2
0
M
U
X
1
0
M
U
X
1
ALU
Zero
ALU result
Address
Read data
Write data
Data memory
0
M
U
X
1
Instruction [15:0]
16
Sign extend
32
ALU control
Instruction [5:0]

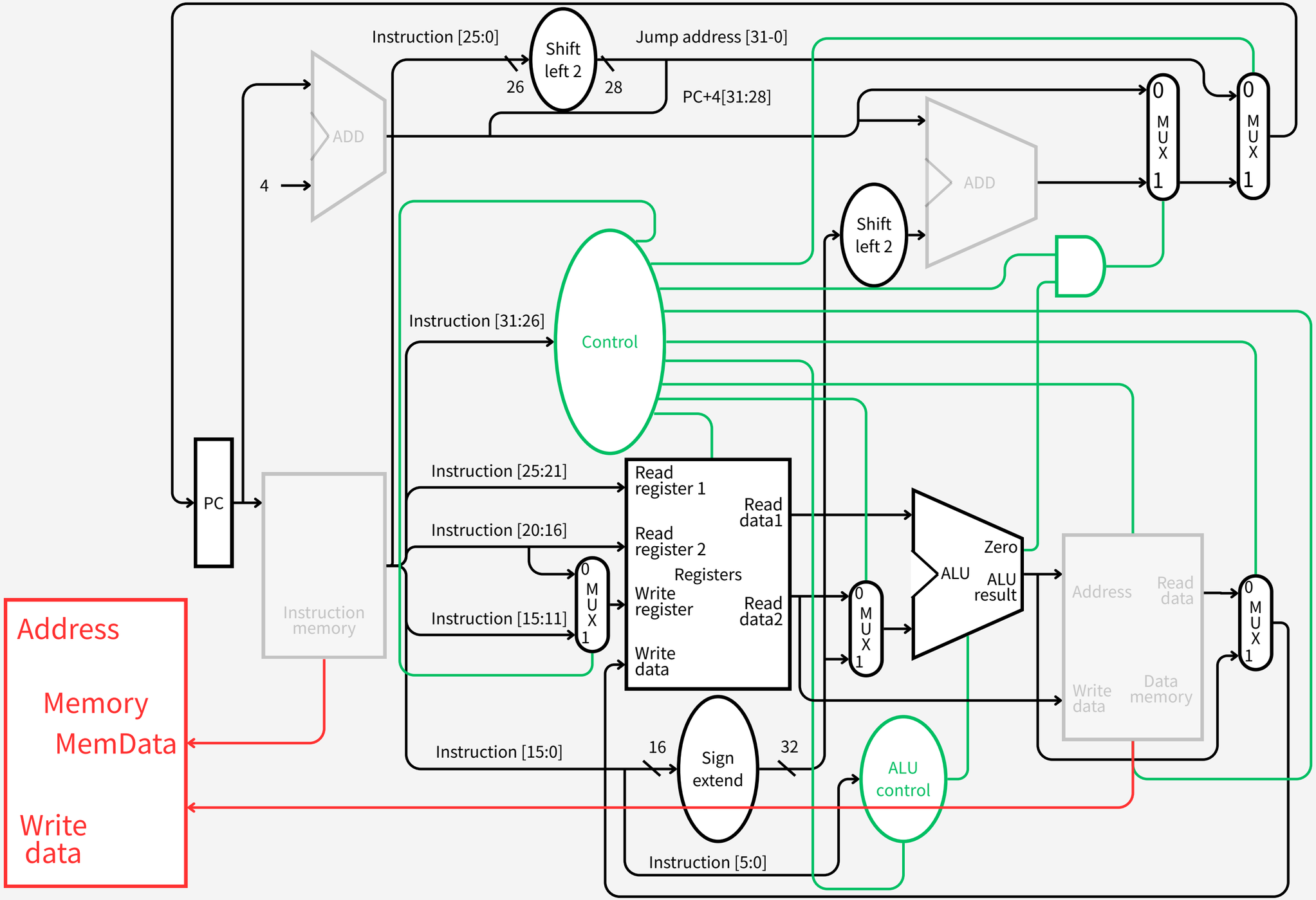
Instruction [25:0]
Shift left 2
Jump address [31-0]
26
28
PC+4[31:28]
ADD
4
ADD
Shift left 2
0
M
U
X
1
0
M
U
X
1
Instruction [31:26]
Control
PC
Instruction memory
Instruction [25:21]
Instruction [20:16]
Instruction [15:11]
0
M
U
X
1
Read register 1
Read register 2
Registers
Write register
Write data
Read data1
Read data2
0
M
U
X
1
ALU
Zero
ALU result
Address
Read data
Write data
Data memory
0
M
U
X
1
Instruction [15:0]
16
Sign extend
32
ALU control
Instruction [5:0]
Address
Memory
MemData
Write data

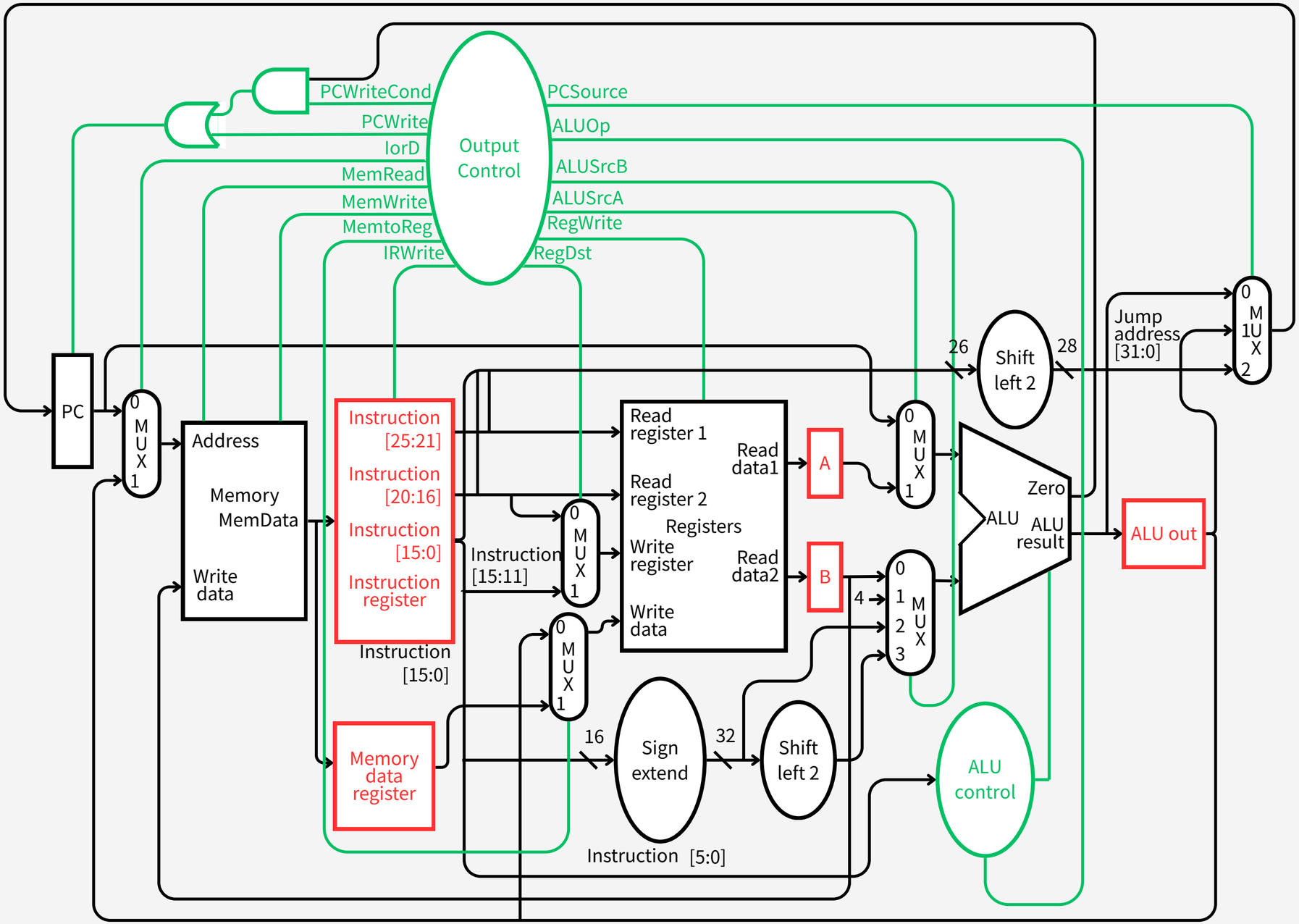
PCWriteCond
PCWrite
IorD
MemRead
MemWrite
MemtoReg
IRWrite
Output Control
PCSource
ALUOp
ALUSrcB
ALUSrcA
RegWrite
RegDst
PC
0 M U X 1
Address
Memory
MemData
Write data
Instruction [25:21]
Instruction [20:16]
Instruction [15:0]
Instruction register
Instruction [15:11]
Instruction [15:0]
Memory data register
Read register 1
Read register 2
Registers
Write register
Write data
Read data1
Read data2
A
B
4
26
Shift left 2
28
Jump address [31:0]
Zero
ALU
ALU result
ALU out
16
Sign extend
32
Shift left 2
Instruction [5:0]
ALU control

# Mechanism of Multicycle Architecture

# add

add $t2,$t0,$t1

| opcode | rs | rt | rd | shamt | funct |
|---|---|---|---|---|---|
| **000000** | **01000** | **01001** | **01010** | **00000** | **100000** |

IF → ID → EX → WB

# IF

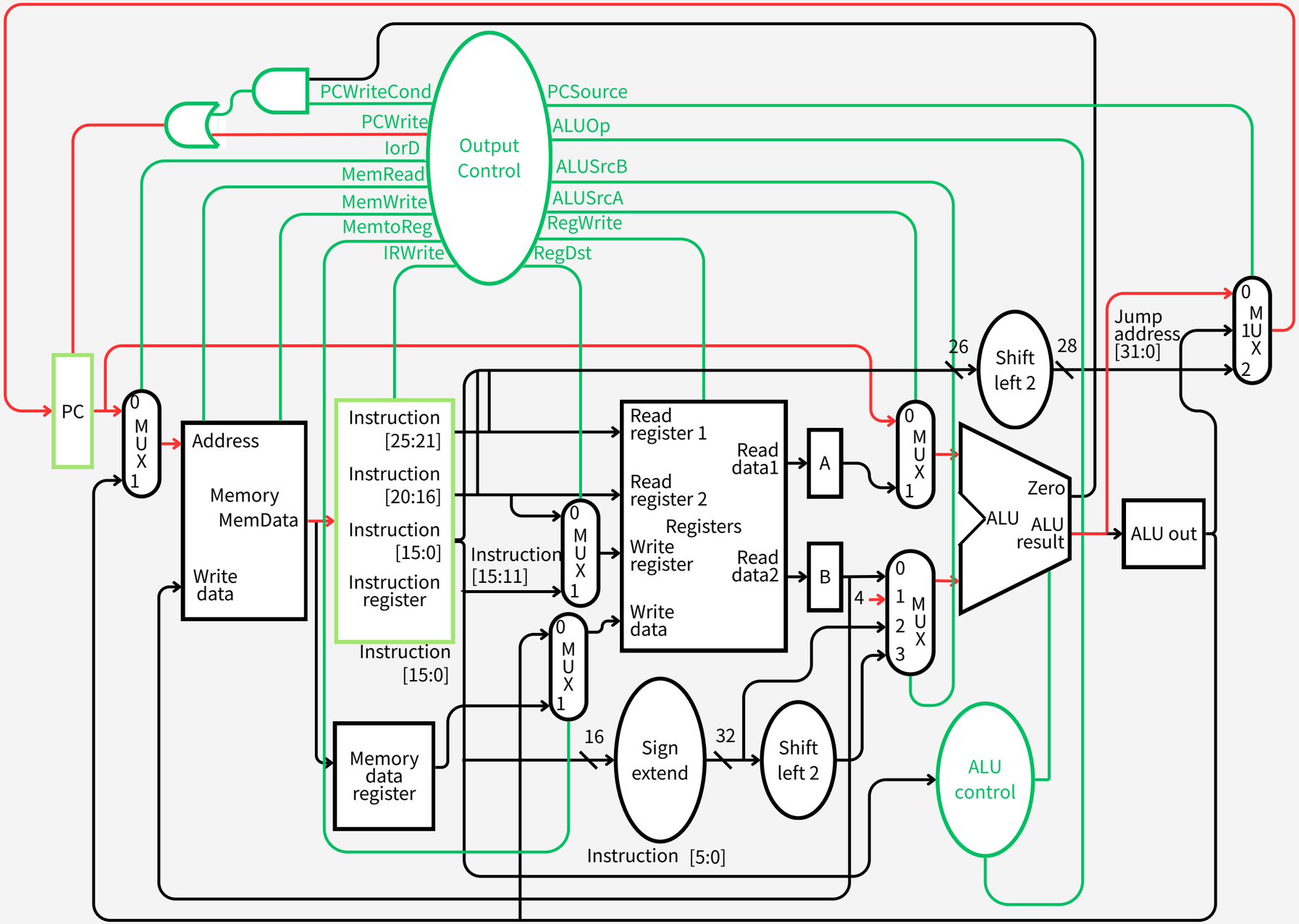
PCWriteCond
PCWrite
IorD
MemRead
MemWrite
MemtoReg
IRWrite
Output Control
PCSource
ALUOp
ALUSrcB
ALUSrcA
RegWrite
RegDst
PC
0 M U X 1
Address
Memory
MemData
Write data
Instruction [25:21]
Instruction [20:16]
Instruction [15:0]
Instruction register
Instruction [15:0]
Instruction [15:11]
0 M U X 1
0 M U X 1
Memory data register
Read register 1
Read register 2
Registers
Write register
Write data
Read data1
Read data2
A
B
4
0 1 2 3 M U X
0 M U X 1
ALU
Zero
ALU result
ALU out
26
Shift left 2
28
Jump address [31:0]
0 M U X 2
16
Sign extend
32
Shift left 2
Instruction [5:0]
ALU control

# ID

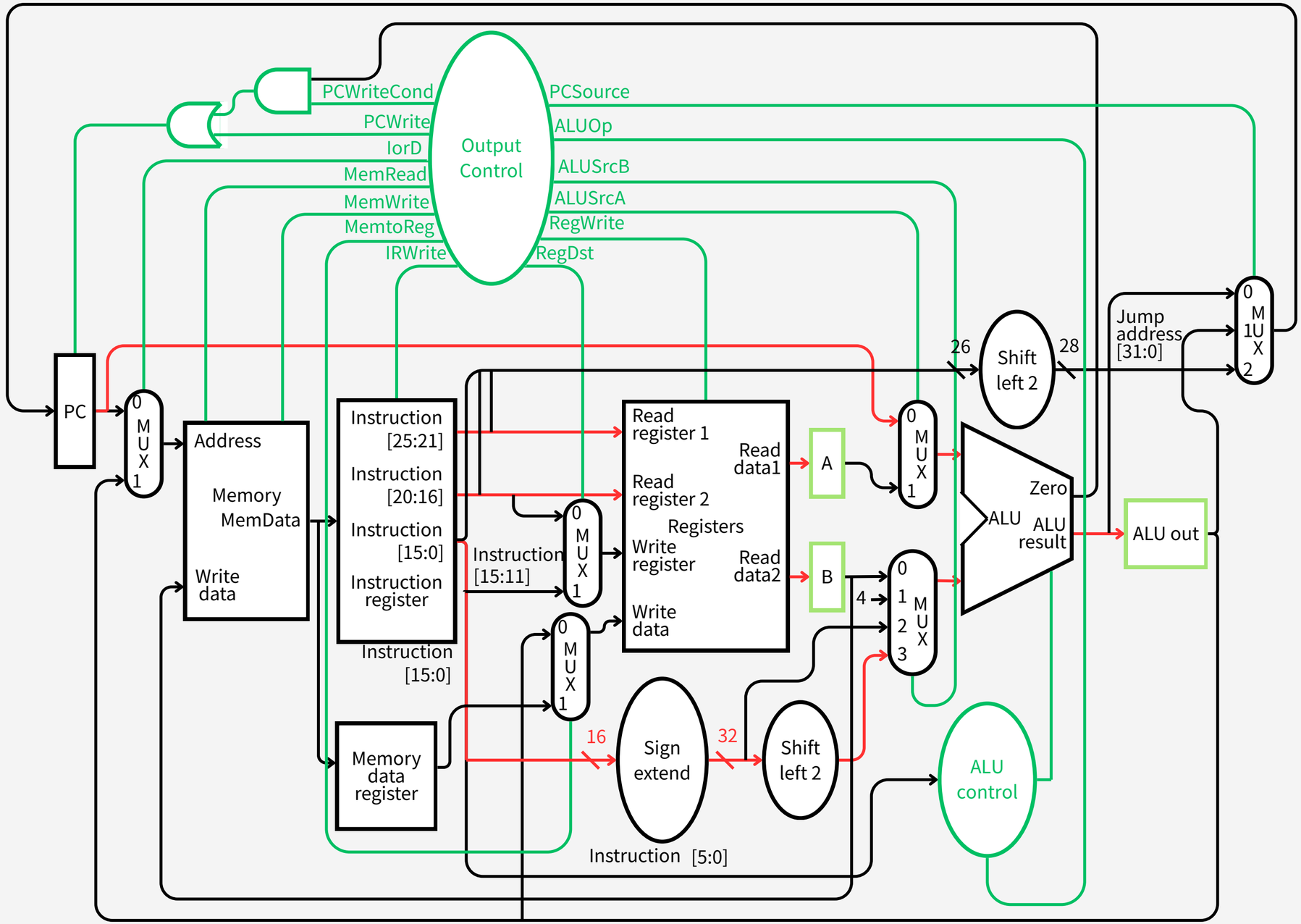
PCWriteCond
PCWrite
IorD
MemRead
MemWrite
MemtoReg
IRWrite
Output Control
PCSource
ALUOp
ALUSrcB
ALUSrcA
RegWrite
RegDst
PC
0 M U X 1
Address
Memory
MemData
Write data
Instruction [25:21]
Instruction [20:16]
Instruction [15:0]
Instruction register
Instruction [15:11]
Instruction [15:0]
Memory data register
Read register 1
Read register 2
Registers
Write register
Write data
Read data1
Read data2
A
B
4
Sign extend
16
32
Shift left 2
26
28
Jump address [31:0]
ALU
Zero
ALU result
ALU out
ALU control
Instruction [5:0]

# EX

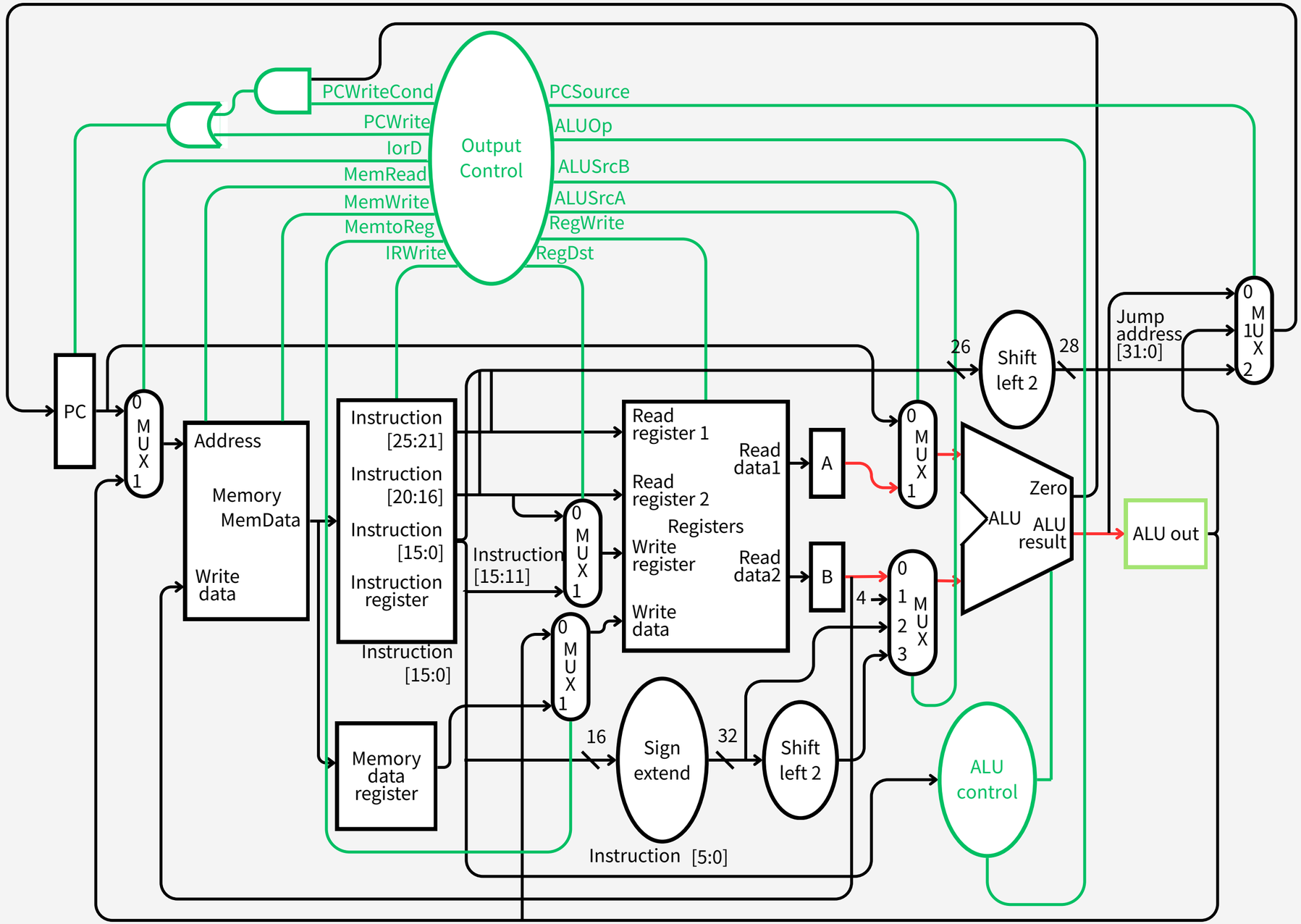
PCWriteCond
PCWrite
IorD
MemRead
MemWrite
MemtoReg
IRWrite
Output Control
PCSource
ALUOp
ALUSrcB
ALUSrcA
RegWrite
RegDst
PC
0 M U X 1
Address
Memory
MemData
Write data
Instruction [25:21]
Instruction [20:16]
Instruction [15:0]
Instruction register
Instruction [15:0]
Instruction [15:11]
0 M U X 1
0 M U X 1
Memory data register
Read register 1
Read register 2
Registers
Write register
Write data
Read data1
Read data2
A
B
4
0 1 2 3 M U X
16
Sign extend
32
Shift left 2
Instruction [5:0]
ALU control
26
Shift left 2
28
Jump address [31:0]
0 M U X 2
0 M U X 1
ALU
Zero
ALU result
ALU out

# WB

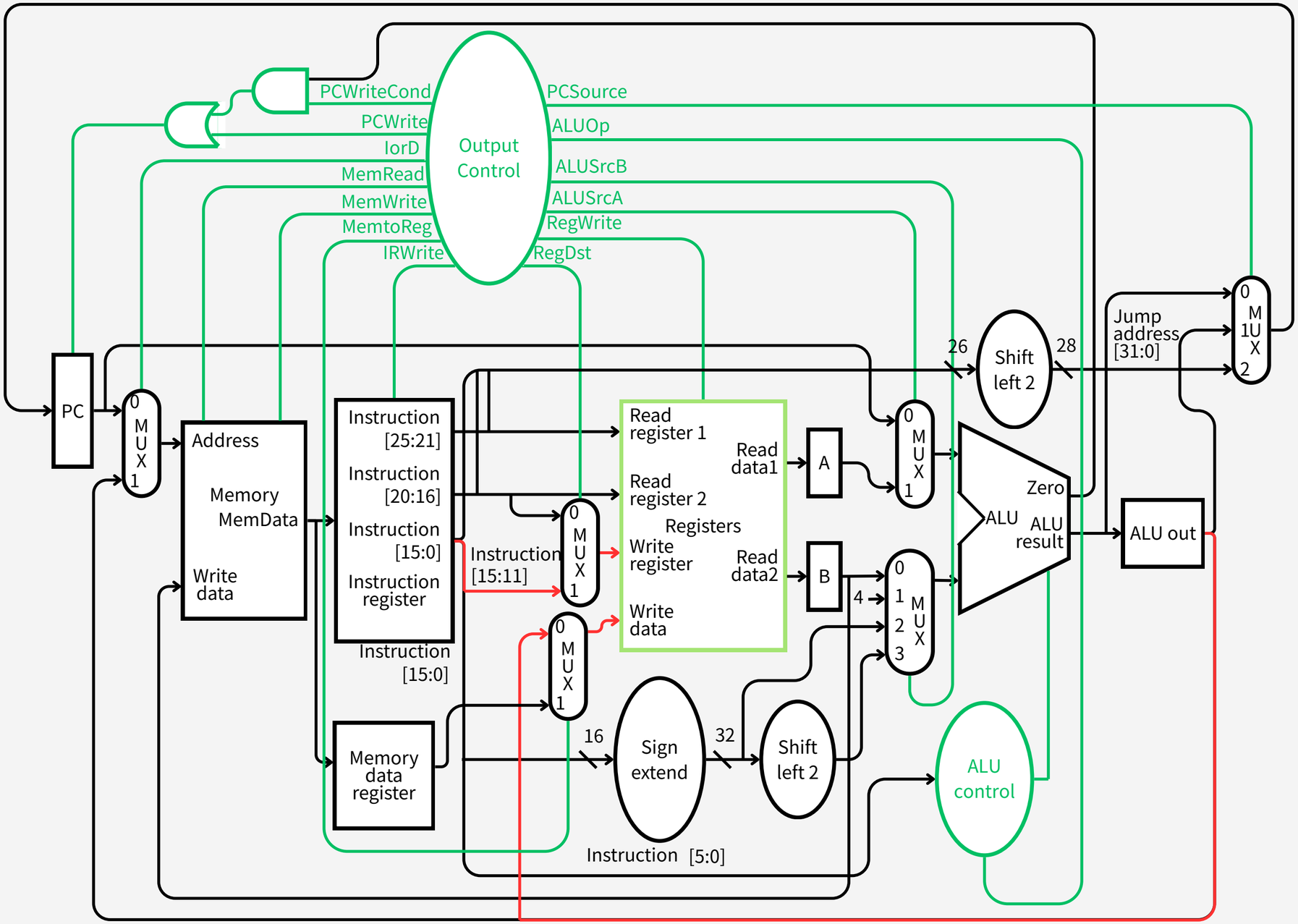
PCWriteCond
PCWrite
IorD
MemRead
MemWrite
MemtoReg
IRWrite
Output Control
PCSource
ALUOp
ALUSrcB
ALUSrcA
RegWrite
RegDst
PC
0 M U X 1
Address
Memory
MemData
Write data
Instruction [25:21]
Instruction [20:16]
Instruction [15:0]
Instruction register
Instruction [15:11]
Instruction [15:0]
Memory data register
Read register 1
Read register 2
Registers
Write register
Write data
Read data1
Read data2
A
B
4
26
Shift left 2
28
Jump address [31:0]
Zero
ALU
ALU result
ALU out
16
Sign extend
32
Shift left 2
Instruction [5:0]
ALU control

# addi

addi $t2,$t0,10

| opcode | rs | rt | offset/immediate |
|---|---|---|---|
| 001000 | 01000 | 01010 | 0000000000001010 |

IF → ID → EX → WB

# IF

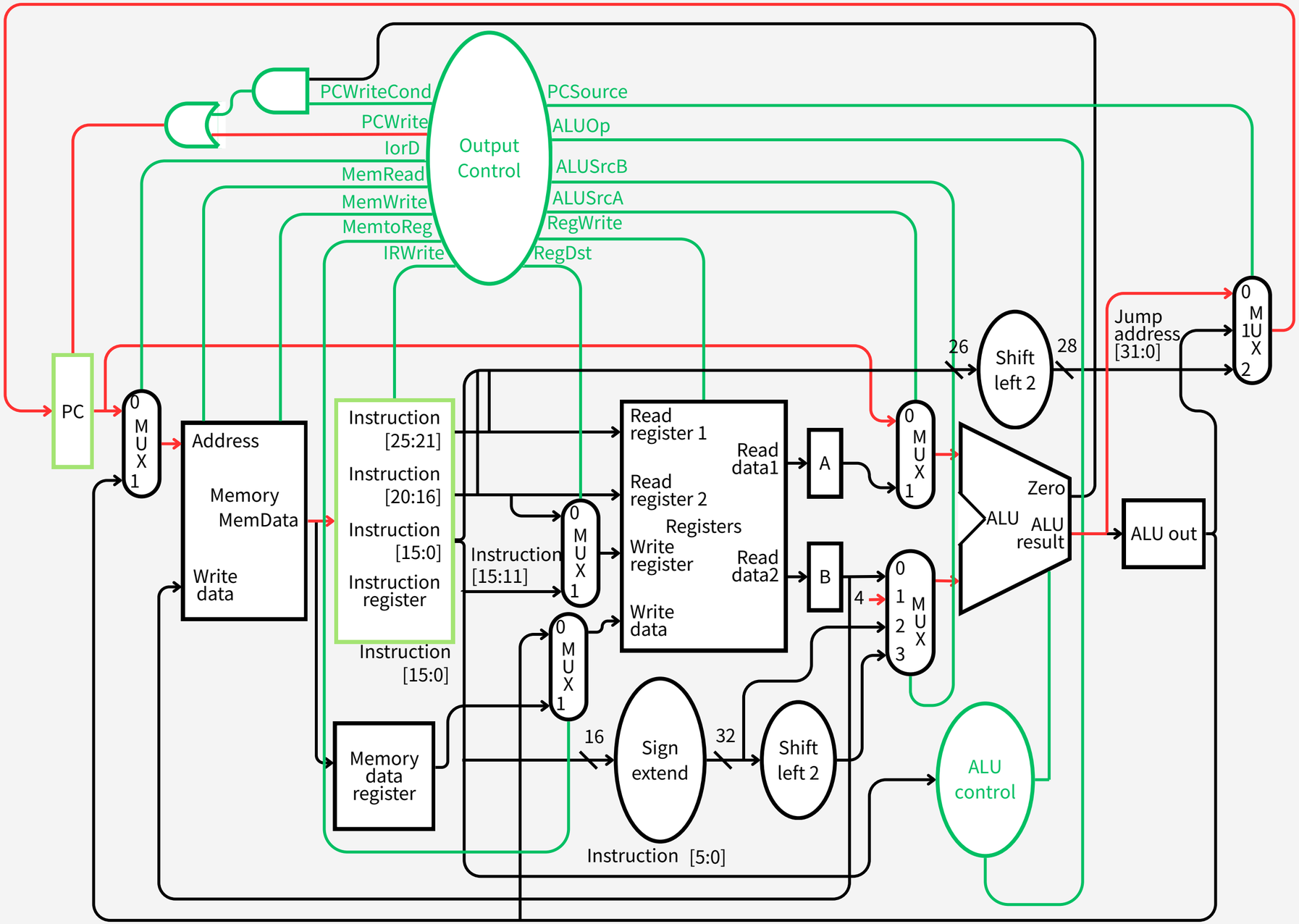
PCWriteCond
PCWrite
IorD
MemRead
MemWrite
MemtoReg
IRWrite
Output Control
PCSource
ALUOp
ALUSrcB
ALUSrcA
RegWrite
RegDst
PC
0 M U X 1
Address
Memory
MemData
Write data
Instruction [25:21]
Instruction [20:16]
Instruction [15:0]
Instruction register
Instruction [15:0]
Instruction [15:11]
0 M U X 1
0 M U X 1
Memory data register
Read register 1
Read register 2
Registers
Write register
Write data
Read data1
Read data2
A
B
4
0 1 2 3 M U X
0 M U X 1
ALU
Zero
ALU result
ALU out
26
Shift left 2
28
Jump address [31:0]
0 M U X 2
16
Sign extend
32
Shift left 2
Instruction [5:0]
ALU control

# ID

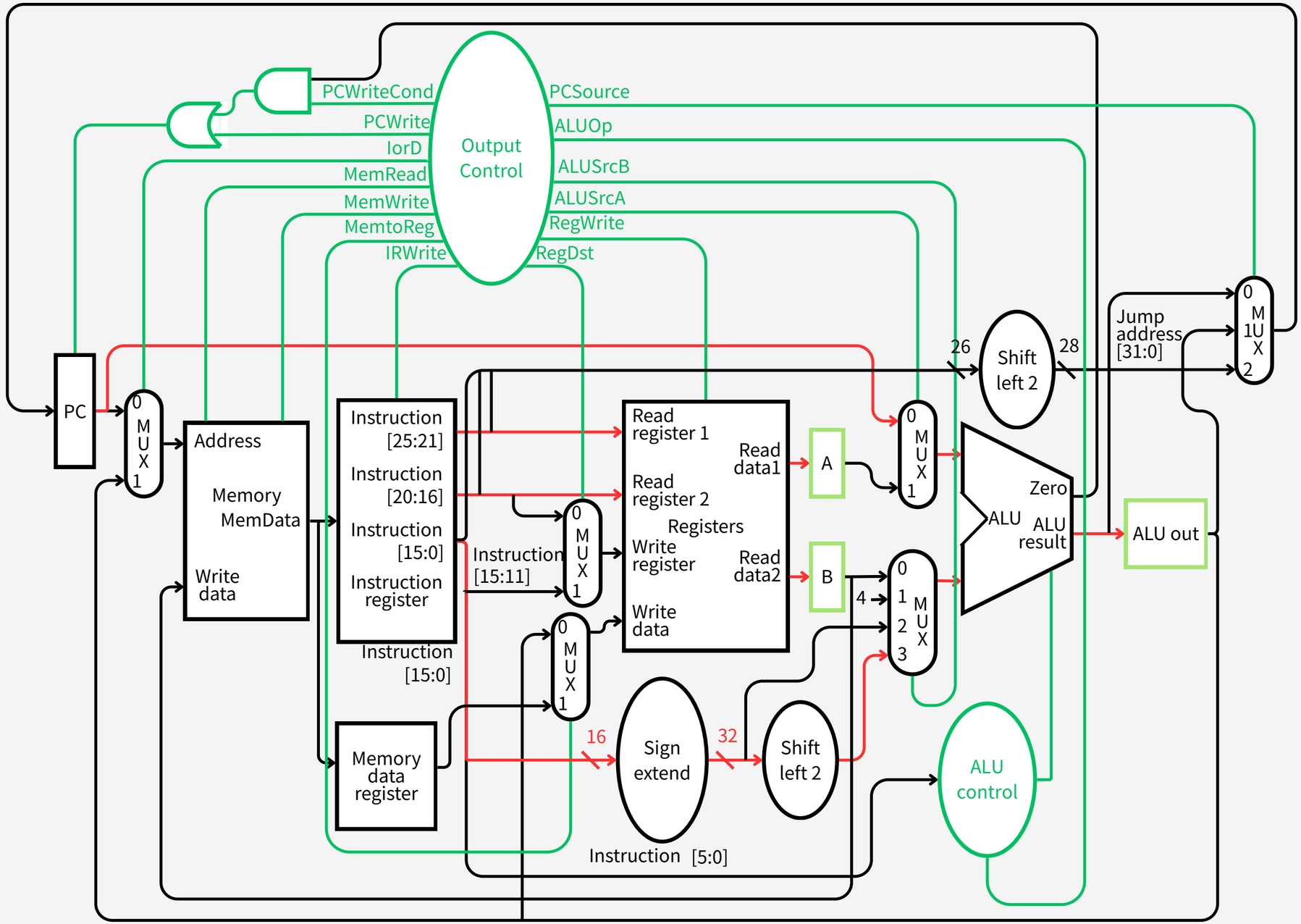
PCWriteCond
PCWrite
IorD
MemRead
MemWrite
MemtoReg
IRWrite
Output Control
PCSource
ALUOp
ALUSrcB
ALUSrcA
RegWrite
RegDst
PC
0 M U X 1
Address
Memory
MemData
Write data
Instruction [25:21]
Instruction [20:16]
Instruction [15:0]
Instruction register
Instruction [15:11]
Instruction [15:0]
Memory data register
Read register 1
Read register 2
Registers
Write register
Write data
Read data1
Read data2
A
B
4
Sign extend
16
32
Shift left 2
26
28
Jump address [31:0]
ALU
Zero
ALU result
ALU out
ALU control
Instruction [5:0]

# EX

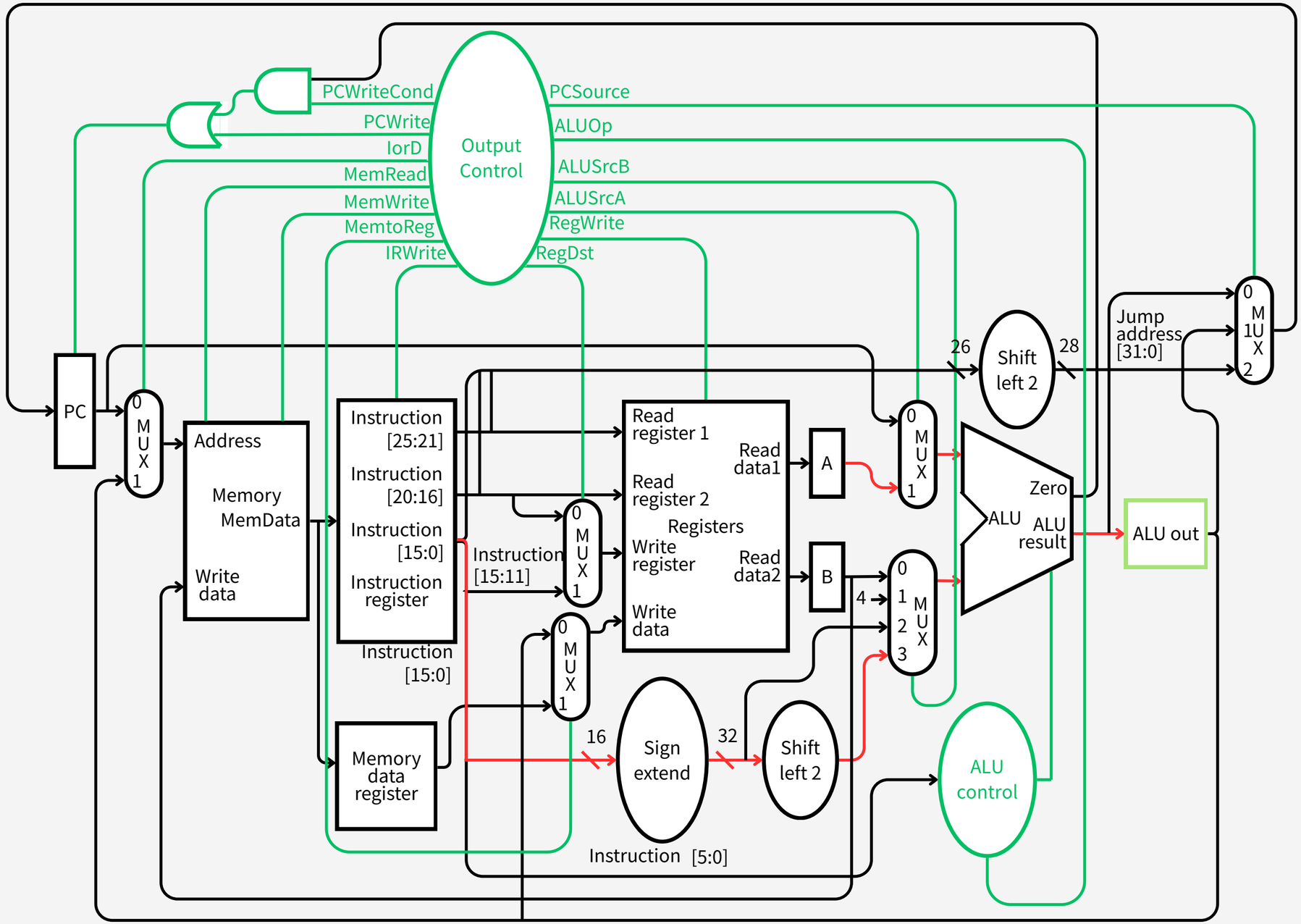
PCWriteCond
PCWrite
IorD
MemRead
MemWrite
MemtoReg
IRWrite
Output Control
PCSource
ALUOp
ALUSrcB
ALUSrcA
RegWrite
RegDst
PC
0 M U X 1
Address
Memory
MemData
Write data
Instruction [25:21]
Instruction [20:16]
Instruction [15:0]
Instruction register
Instruction [15:11]
Instruction [15:0]
Memory data register
Read register 1
Read register 2
Registers
Write register
Write data
Read data1
Read data2
A
B
4
26
Shift left 2
28
Jump address [31:0]
Zero
ALU
ALU result
ALU out
16
Sign extend
32
Shift left 2
Instruction [5:0]
ALU control

# WB

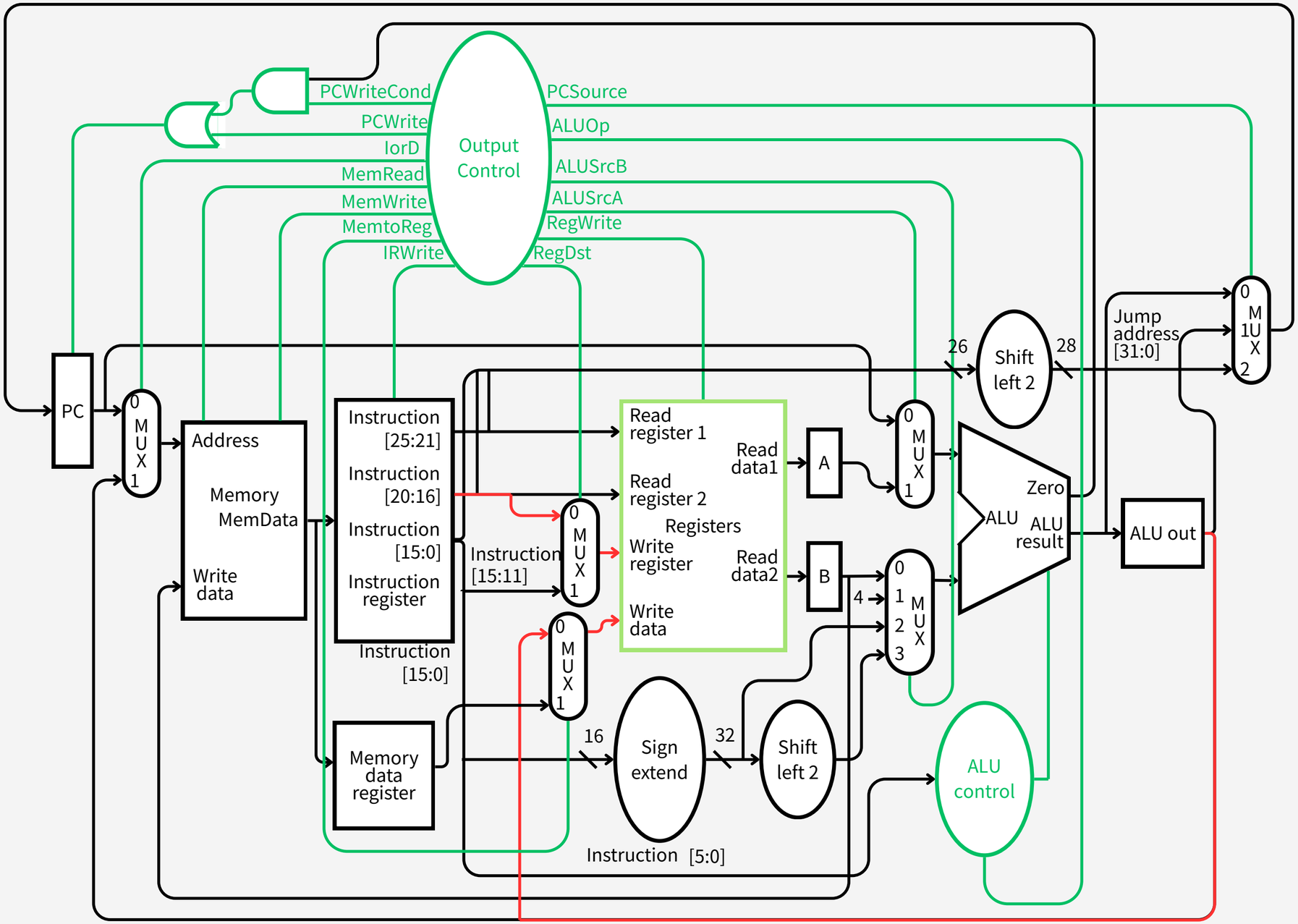
PCWriteCond
PCWrite
IorD
MemRead
MemWrite
MemtoReg
IRWrite
Output Control
PCSource
ALUOp
ALUSrcB
ALUSrcA
RegWrite
RegDst
PC
0 M U X 1
Address
Memory
MemData
Write data
Instruction [25:21]
Instruction [20:16]
Instruction [15:0]
Instruction register
Instruction [15:0]
Instruction [15:11]
0 M U X 1
0 M U X 1
Memory data register
Read register 1
Read register 2
Registers
Write register
Write data
Read data1
Read data2
A
B
4
0 1 2 3 M U X
0 M U X 1
ALU
Zero
ALU result
ALU out
26
Shift left 2
28
Jump address [31:0]
0 M U X 2
16
Sign extend
32
Shift left 2
Instruction [5:0]
ALU control

# beq

beq $t1,$t0,10

| opcode | rs | rt | offset/immediate |
|---|---|---|---|
| 000100 | 01001 | 01000 | 0000000000001010 |

IF → ID → EX

# IF

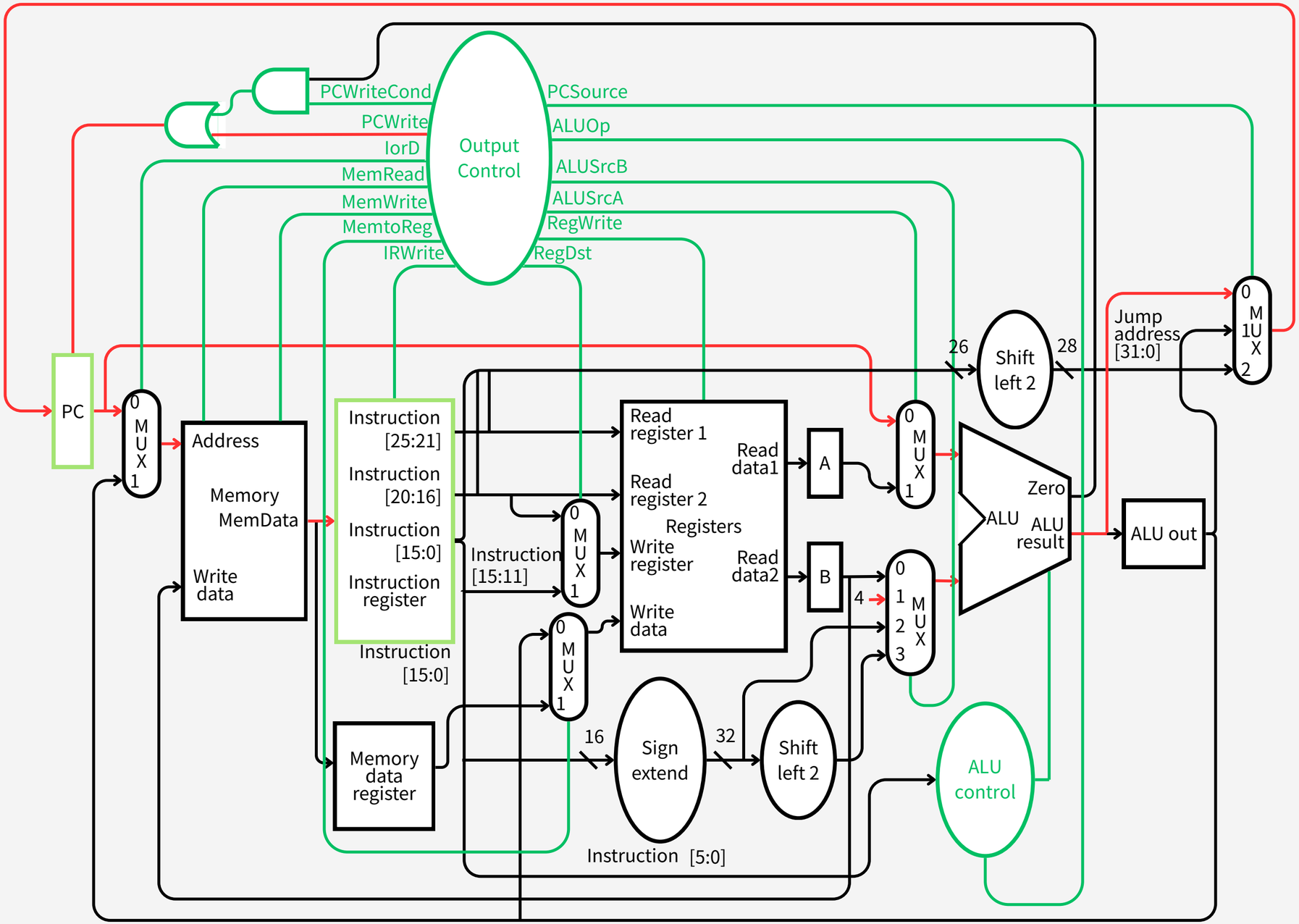
PCWriteCond
PCWrite
IorD
MemRead
MemWrite
MemtoReg
IRWrite
Output Control
PCSource
ALUOp
ALUSrcB
ALUSrcA
RegWrite
RegDst
PC
0 M U X 1
Address
Memory
MemData
Write data
Instruction [25:21]
Instruction [20:16]
Instruction [15:0]
Instruction register
Instruction [15:0]
Instruction [15:11]
0 M U X 1
0 M U X 1
Memory data register
Read register 1
Read register 2
Registers
Write register
Write data
Read data1
Read data2
A
B
4
0 1 2 3 M U X
0 M U X 1
ALU
Zero
ALU result
ALU out
26
Shift left 2
28
Jump address [31:0]
0 M U X 2
16
Sign extend
32
Shift left 2
Instruction [5:0]
ALU control

# ID

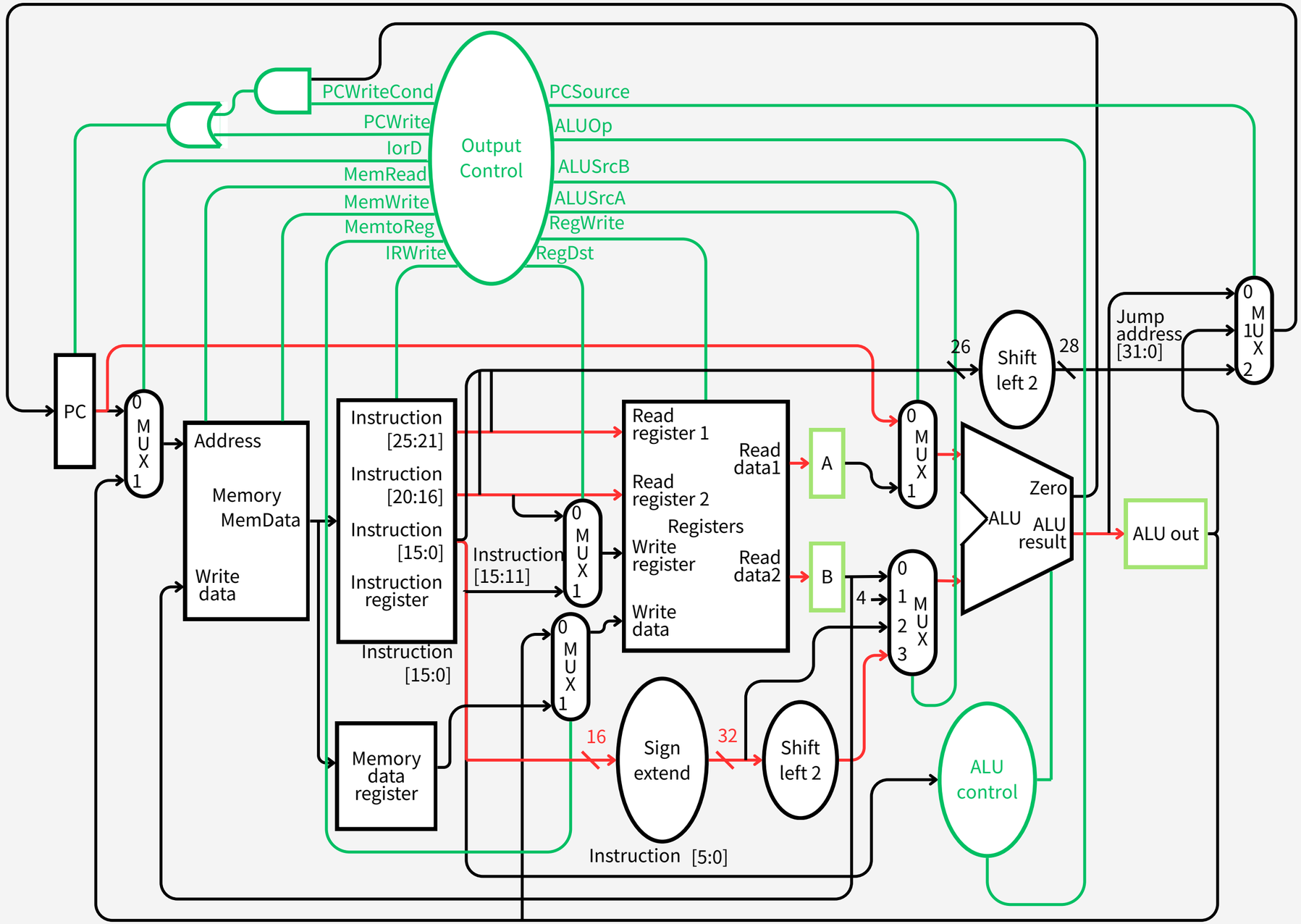
PCWriteCond
PCWrite
IorD
MemRead
MemWrite
MemtoReg
IRWrite
Output Control
PCSource
ALUOp
ALUSrcB
ALUSrcA
RegWrite
RegDst
PC
0 M U X 1
Address
Memory
MemData
Write data
Instruction [25:21]
Instruction [20:16]
Instruction [15:0]
Instruction register
Instruction [15:11]
Instruction [15:0]
Memory data register
Read register 1
Read register 2
Registers
Write register
Write data
Read data1
Read data2
A
B
4
Sign extend
16
32
Shift left 2
26
28
Jump address [31:0]
ALU
Zero
ALU result
ALU out
ALU control
Instruction [5:0]

# EX

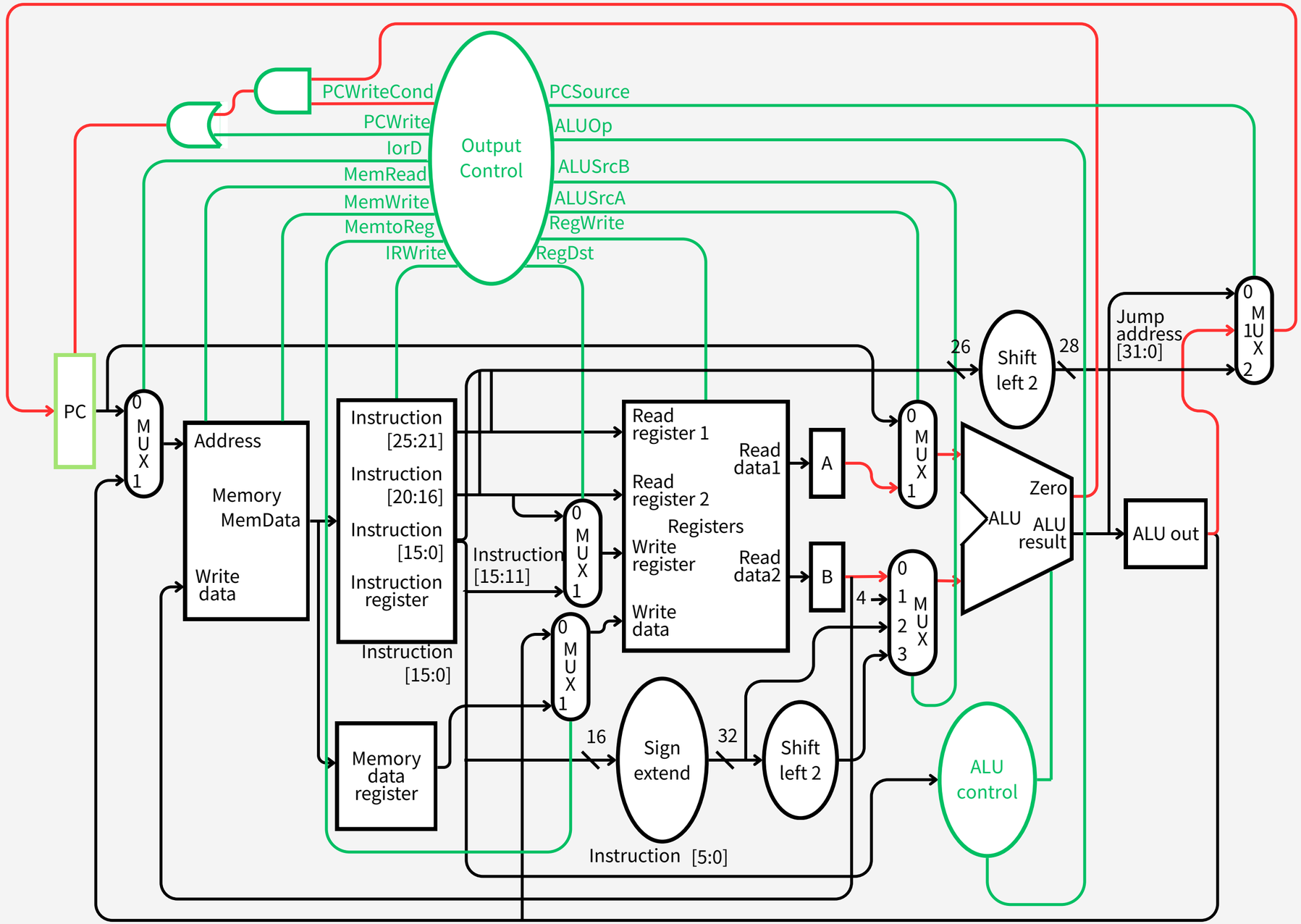
PCWriteCond
PCWrite
IorD
MemRead
MemWrite
MemtoReg
IRWrite
Output Control
PCSource
ALUOp
ALUSrcB
ALUSrcA
RegWrite
RegDst
PC
0 M U X 1
Address
Memory
MemData
Write data
Instruction [25:21]
Instruction [20:16]
Instruction [15:0]
Instruction register
Instruction [15:0]
Instruction [15:11]
0 M U X 1
0 M U X 1
Memory data register
Read register 1
Read register 2
Registers
Write register
Write data
Read data1
Read data2
A
B
4
0 1 2 3 M U X
16
Sign extend
32
Shift left 2
Instruction [5:0]
ALU control
26
Shift left 2
28
Jump address [31:0]
0 M U X 1 2
0 M U X 1
ALU
Zero
ALU result
ALU out

# lw

lw $t1,10($t0)

| opcode | rs | rt | offset/immediate |
|---|---|---|---|
| **100011** | **01000** | **01001** | **0000000000001010** |

IF → ID → EX → MEM → WB

# IF

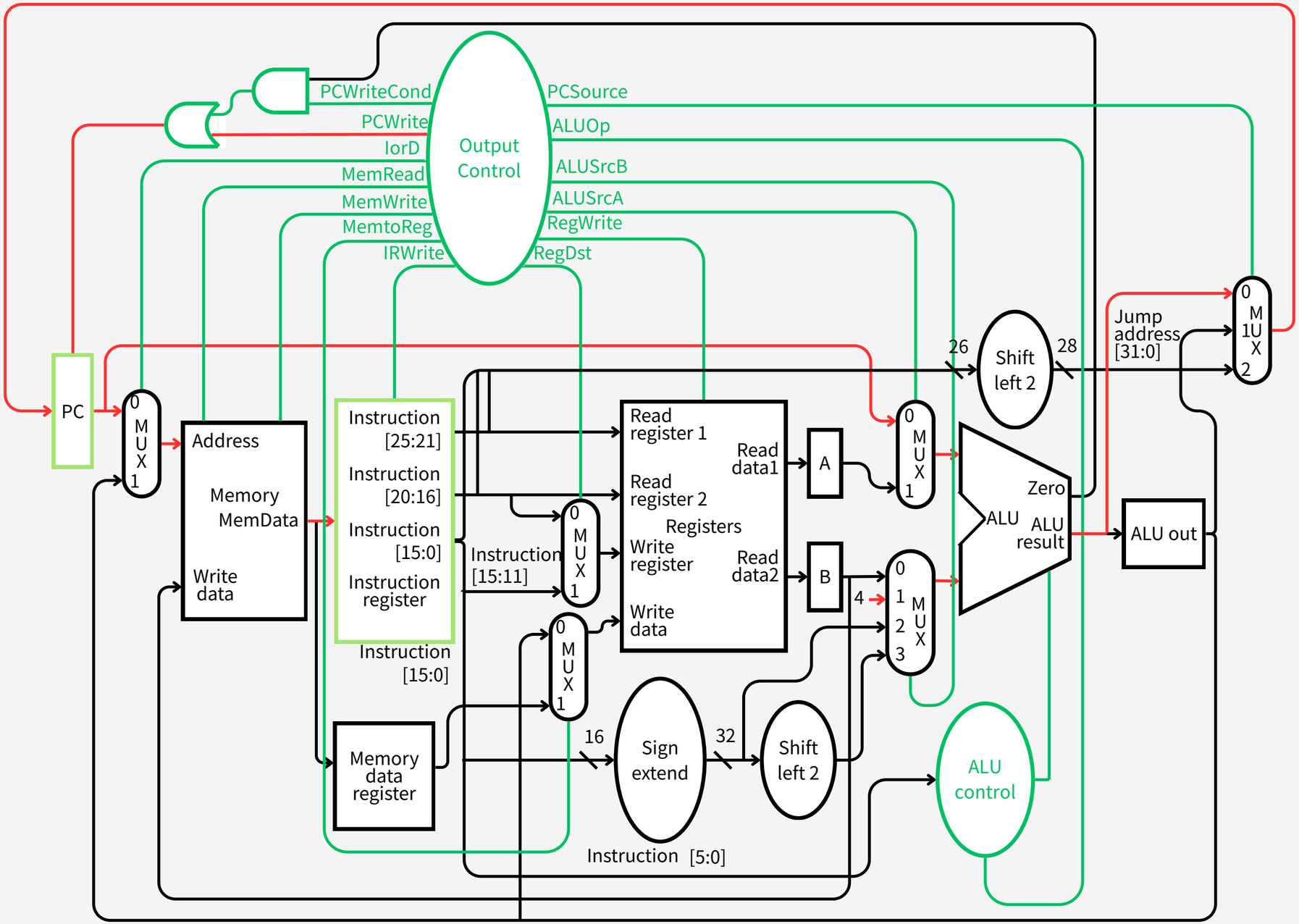
PCWriteCond
PCWrite
IorD
MemRead
MemWrite
MemtoReg
IRWrite
Output Control
PCSource
ALUOp
ALUSrcB
ALUSrcA
RegWrite
RegDst
PC
0 M U X 1
Address
Memory
MemData
Write data
Instruction [25:21]
Instruction [20:16]
Instruction [15:0]
Instruction register
Instruction [15:0]
Instruction [15:11]
0 M U X 1
0 M U X 1
Memory data register
Read register 1
Read register 2
Registers
Write register
Write data
Read data1
Read data2
A
B
4
0 1 2 3 M U X
0 M U X 1
ALU
Zero
ALU result
ALU out
26
Shift left 2
28
Jump address [31:0]
0 M U X 2
16
Sign extend
32
Shift left 2
Instruction [5:0]
ALU control

# ID

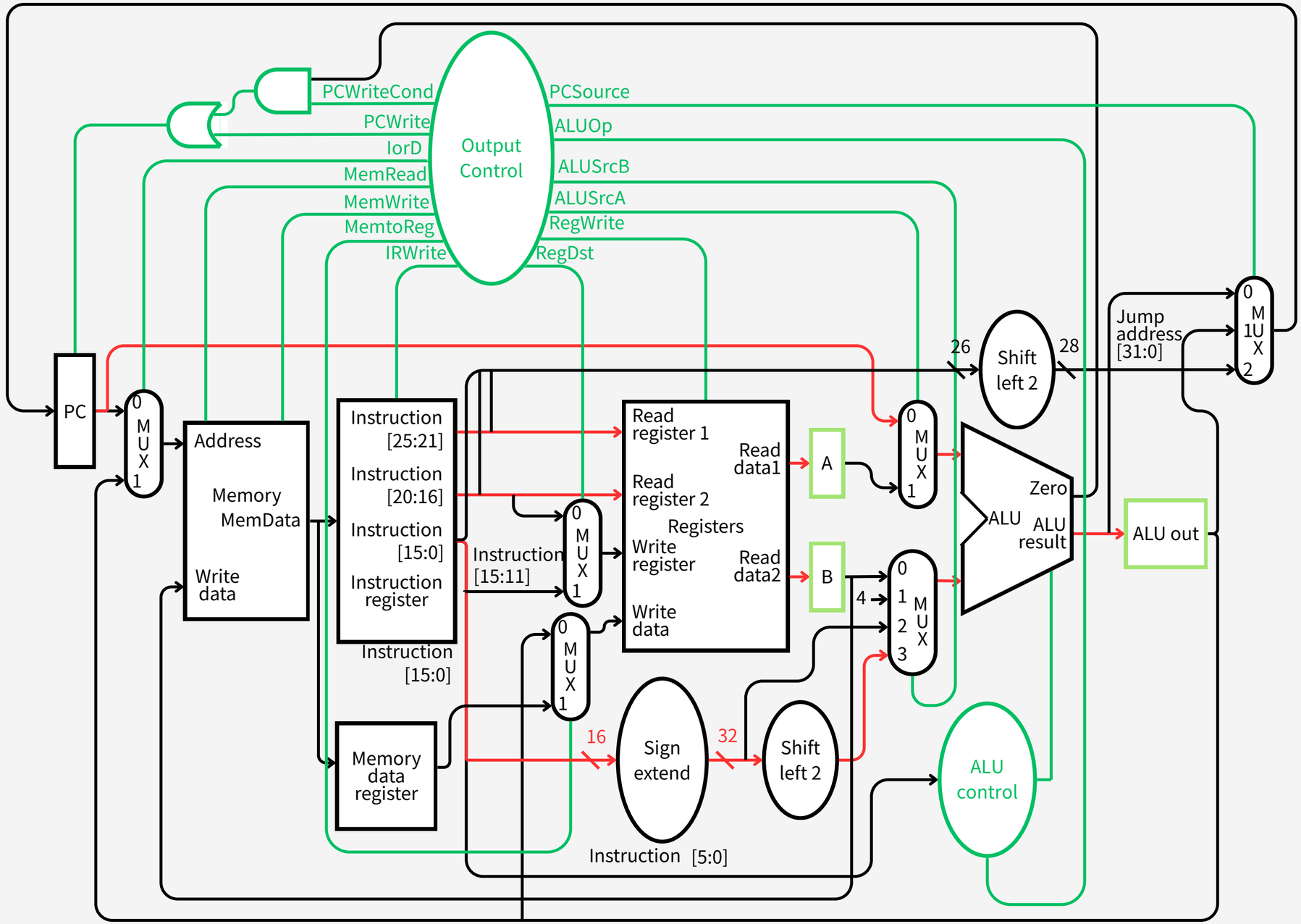
PCWriteCond
PCWrite
IorD
MemRead
MemWrite
MemtoReg
IRWrite
Output Control
PCSource
ALUOp
ALUSrcB
ALUSrcA
RegWrite
RegDst
PC
0 M U X 1
Address
Memory
MemData
Write data
Instruction [25:21]
Instruction [20:16]
Instruction [15:0]
Instruction register
Instruction [15:11]
Instruction [15:0]
Memory data register
Read register 1
Read register 2
Registers
Write register
Write data
Read data1
Read data2
A
B
4
Sign extend
16
32
Shift left 2
26
28
Jump address [31:0]
ALU
Zero
ALU result
ALU out
ALU control
Instruction [5:0]

# EX

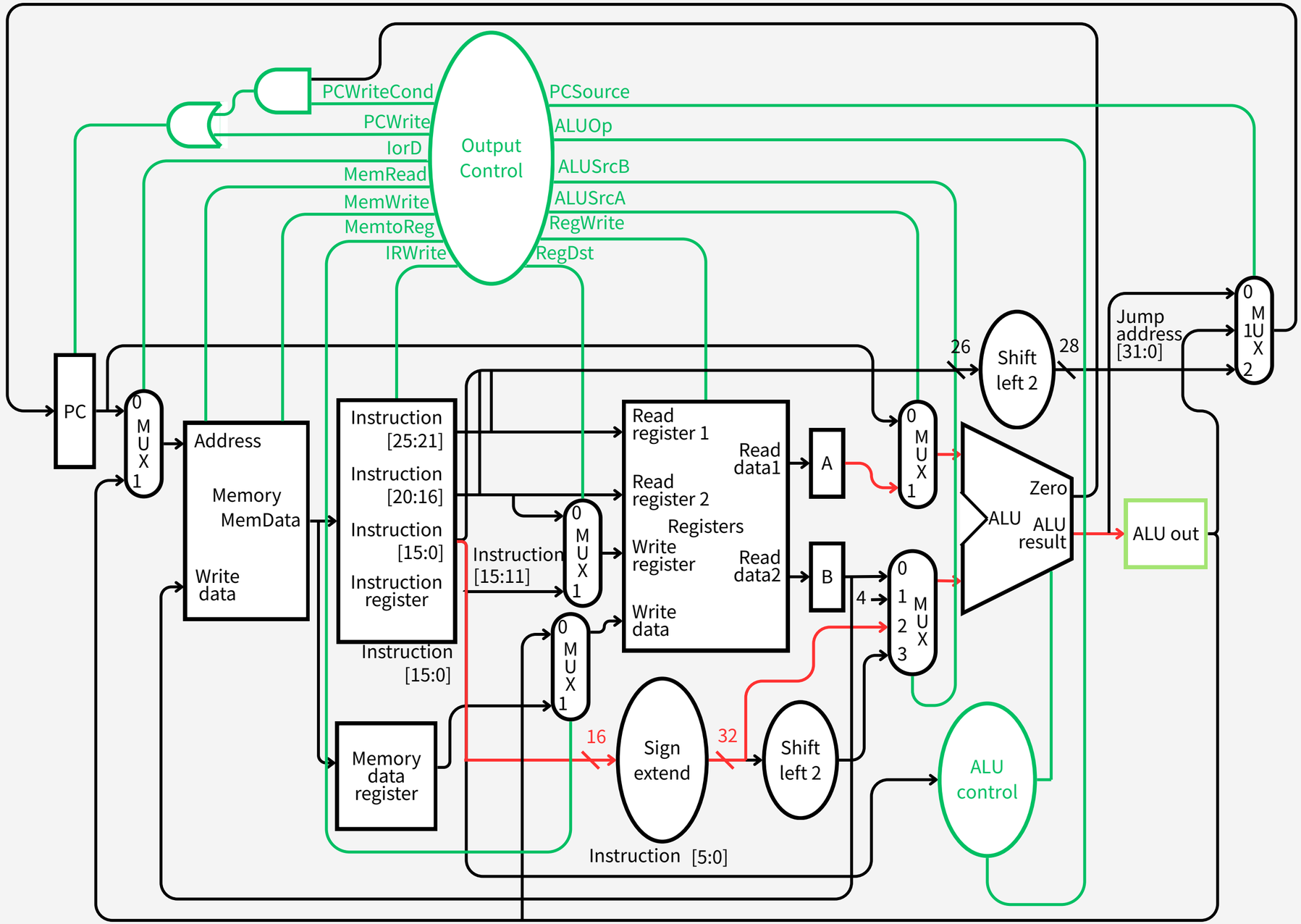
PCWriteCond
PCWrite
IorD
MemRead
MemWrite
MemtoReg
IRWrite
Output Control
PCSource
ALUOp
ALUSrcB
ALUSrcA
RegWrite
RegDst
PC
0 M U X 1
Address
Memory
MemData
Write data
Instruction [25:21]
Instruction [20:16]
Instruction [15:0]
Instruction register
Instruction [15:11]
Instruction [15:0]
Memory data register
Read register 1
Read register 2
Registers
Write register
Write data
Read data1
Read data2
A
B
4
26
Shift left 2
28
Jump address [31:0]
Zero
ALU
ALU result
ALU out
16
Sign extend
32
Shift left 2
Instruction [5:0]
ALU control

# MEM

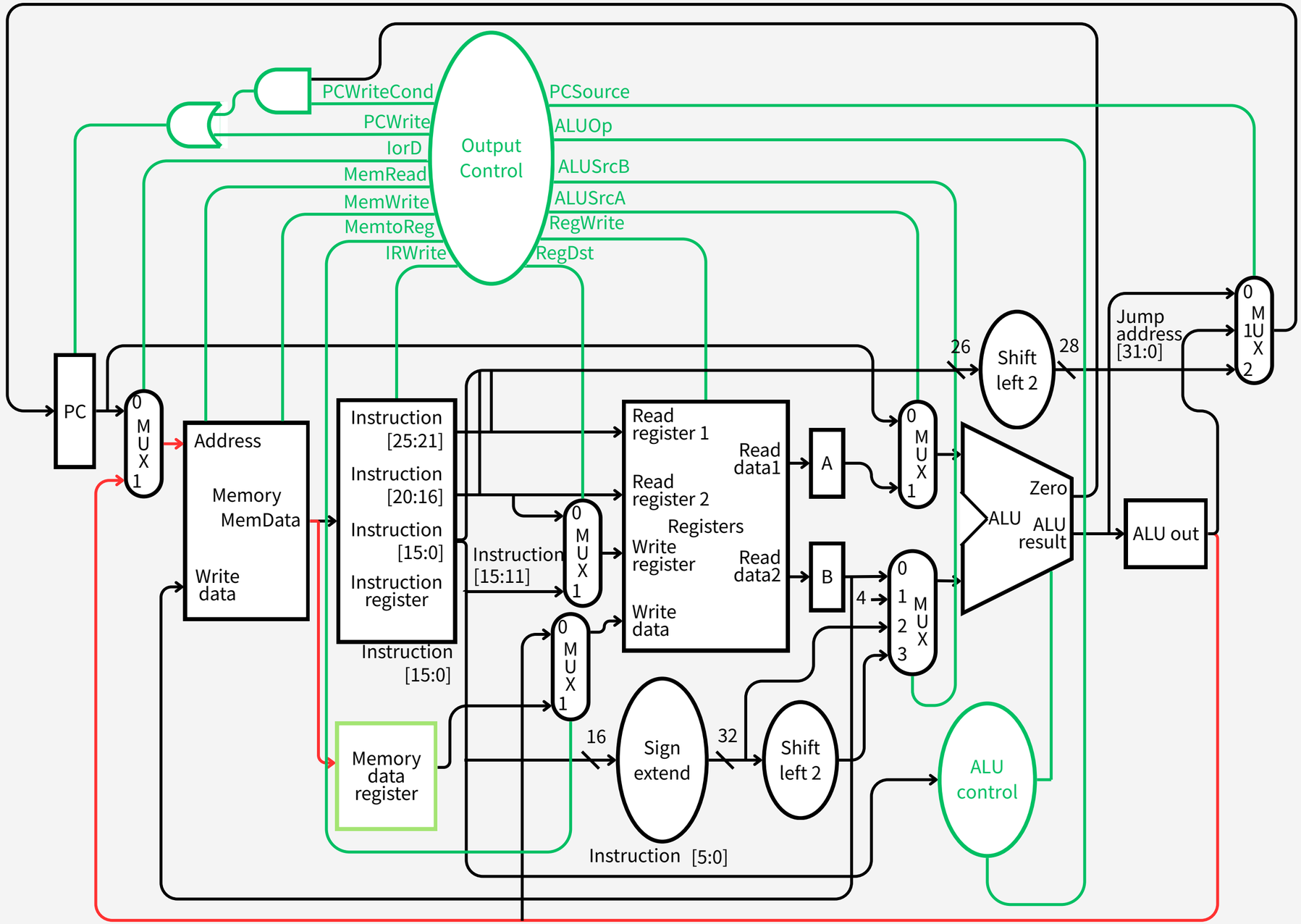
PCWriteCond
PCWrite
IorD
MemRead
MemWrite
MemtoReg
IRWrite
Output Control
PCSource
ALUOp
ALUSrcB
ALUSrcA
RegWrite
RegDst
PC
0 M U X 1
Address
Memory
MemData
Write data
Instruction [25:21]
Instruction [20:16]
Instruction [15:0]
Instruction register
Instruction [15:0]
Instruction [15:11]
0 M U X 1
0 M U X 1
Memory data register
Read register 1
Read register 2
Registers
Write register
Write data
Read data1
Read data2
A
B
4
0 1 2 3 M U X
16
Sign extend
32
Shift left 2
Instruction [5:0]
ALU control
26
Shift left 2
28
Jump address [31:0]
0 M U X 2
0 M U X 1
ALU
Zero
ALU result
ALU out

# WB

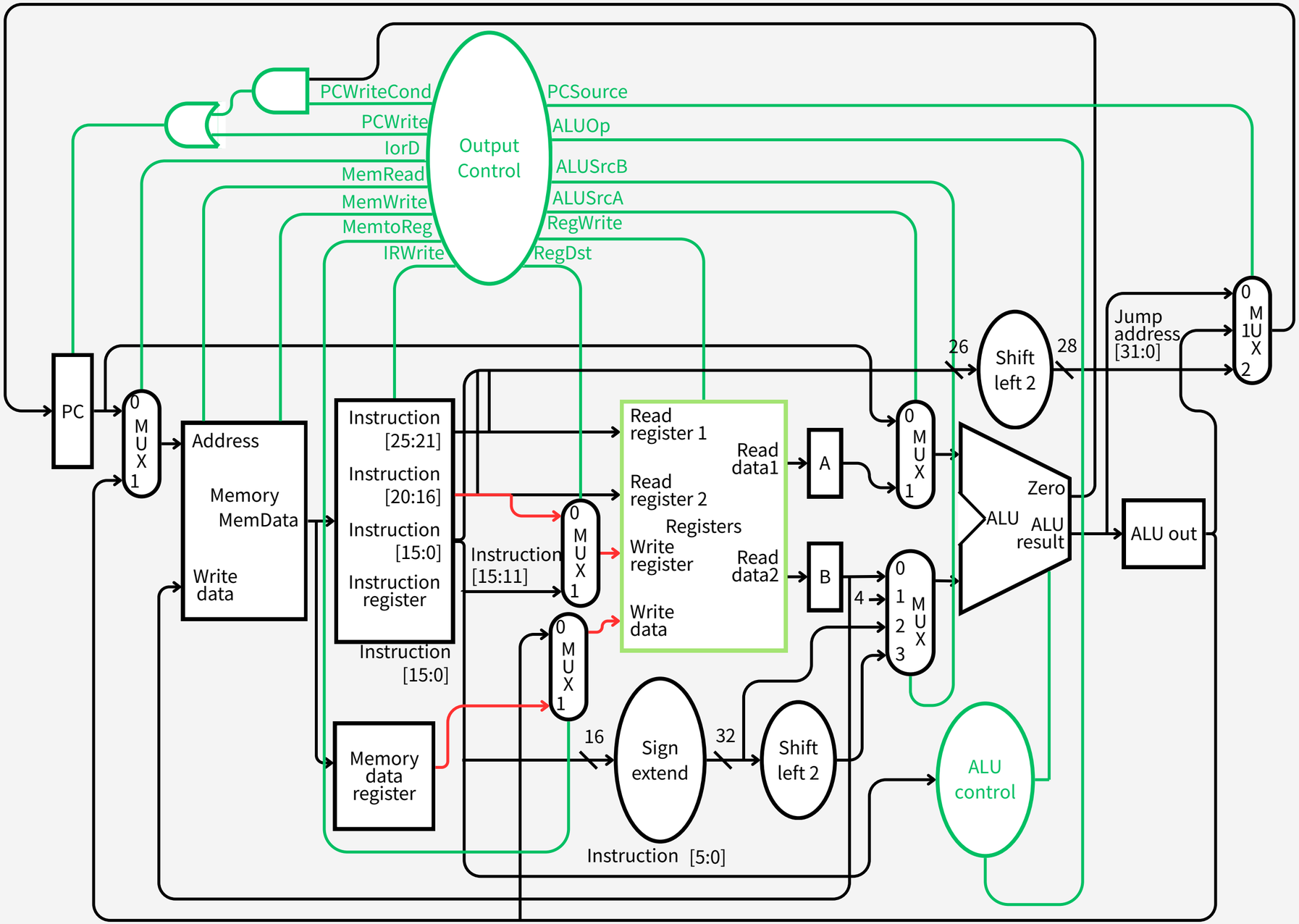
PCWriteCond
PCWrite
IorD
MemRead
MemWrite
MemtoReg
IRWrite
Output Control
PCSource
ALUOp
ALUSrcB
ALUSrcA
RegWrite
RegDst
PC
0 M U X 1
Address
Memory
MemData
Write data
Instruction [25:21]
Instruction [20:16]
Instruction [15:0]
Instruction register
Instruction [15:0]
Instruction [15:11]
0 M U X 1
0 M U X 1
Memory data register
Read register 1
Read register 2
Registers
Write register
Write data
Read data1
Read data2
A
B
4
0 1 2 3 M U X
0 M U X 1
26
Shift left 2
28
Jump address [31:0]
0 M U X 2
ALU
Zero
ALU result
ALU out
16
Sign extend
32
Shift left 2
ALU control
Instruction [5:0]

# SW

sw $t1,10($t0)

| opcode | rs | rt | offset/immediate |
|---|---|---|---|
| **101011** | **01000** | **01001** | **0000000000001010** |

IF → ID → EX → MEM

# IF

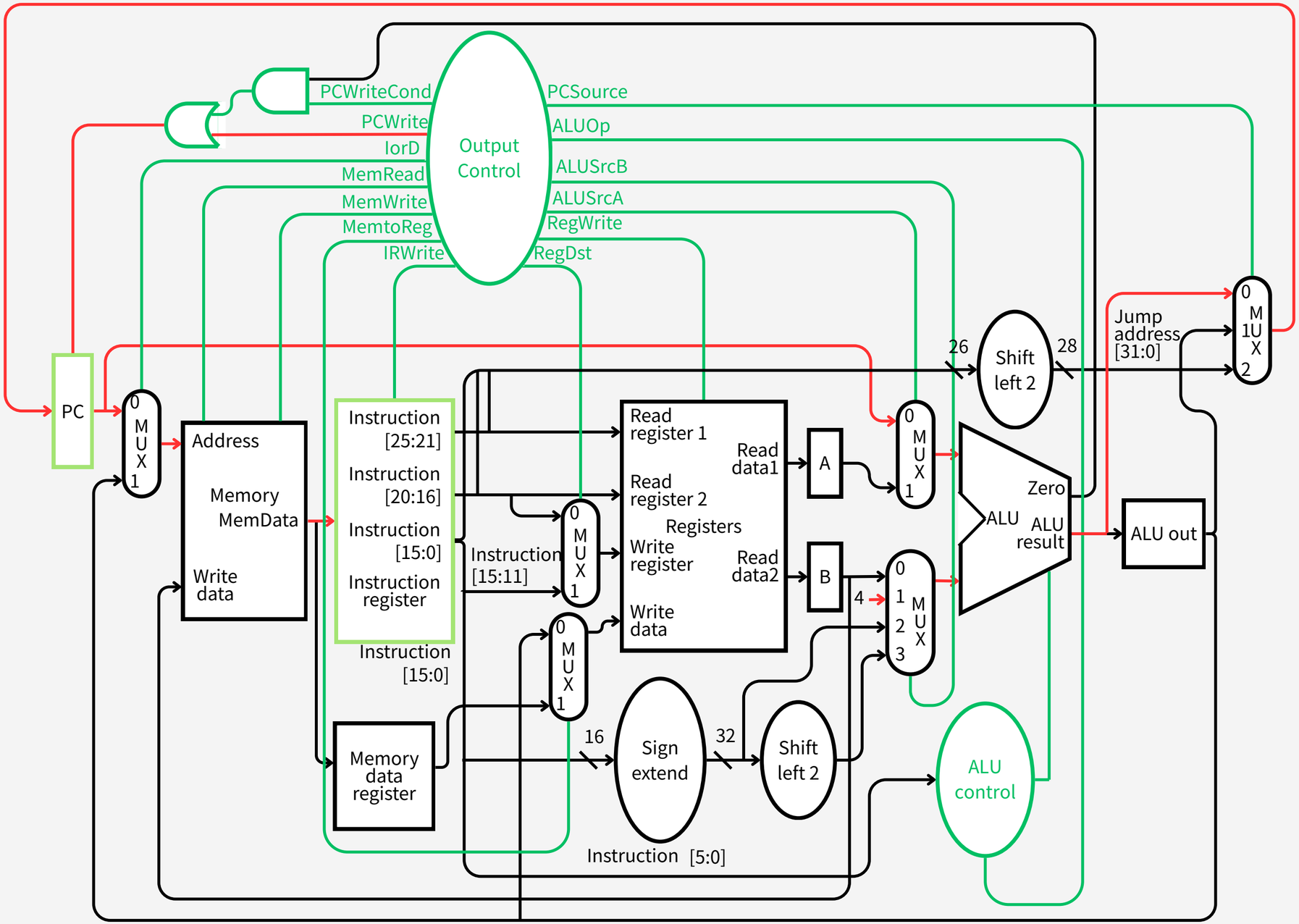
PCWriteCond
PCWrite
IorD
MemRead
MemWrite
MemtoReg
IRWrite
Output Control
PCSource
ALUOp
ALUSrcB
ALUSrcA
RegWrite
RegDst
PC
0 M U X 1
Address
Memory
MemData
Write data
Instruction [25:21]
Instruction [20:16]
Instruction [15:0]
Instruction register
Instruction [15:0]
Instruction [15:11]
0 M U X 1
0 M U X 1
Memory data register
Read register 1
Read register 2
Registers
Write register
Write data
Read data1
Read data2
A
B
4
0 1 2 3 M U X
0 M U X 1
ALU
Zero
ALU result
ALU out
26
Shift left 2
28
Jump address [31:0]
0 M U X 2
16
Sign extend
32
Shift left 2
Instruction [5:0]
ALU control

# ID

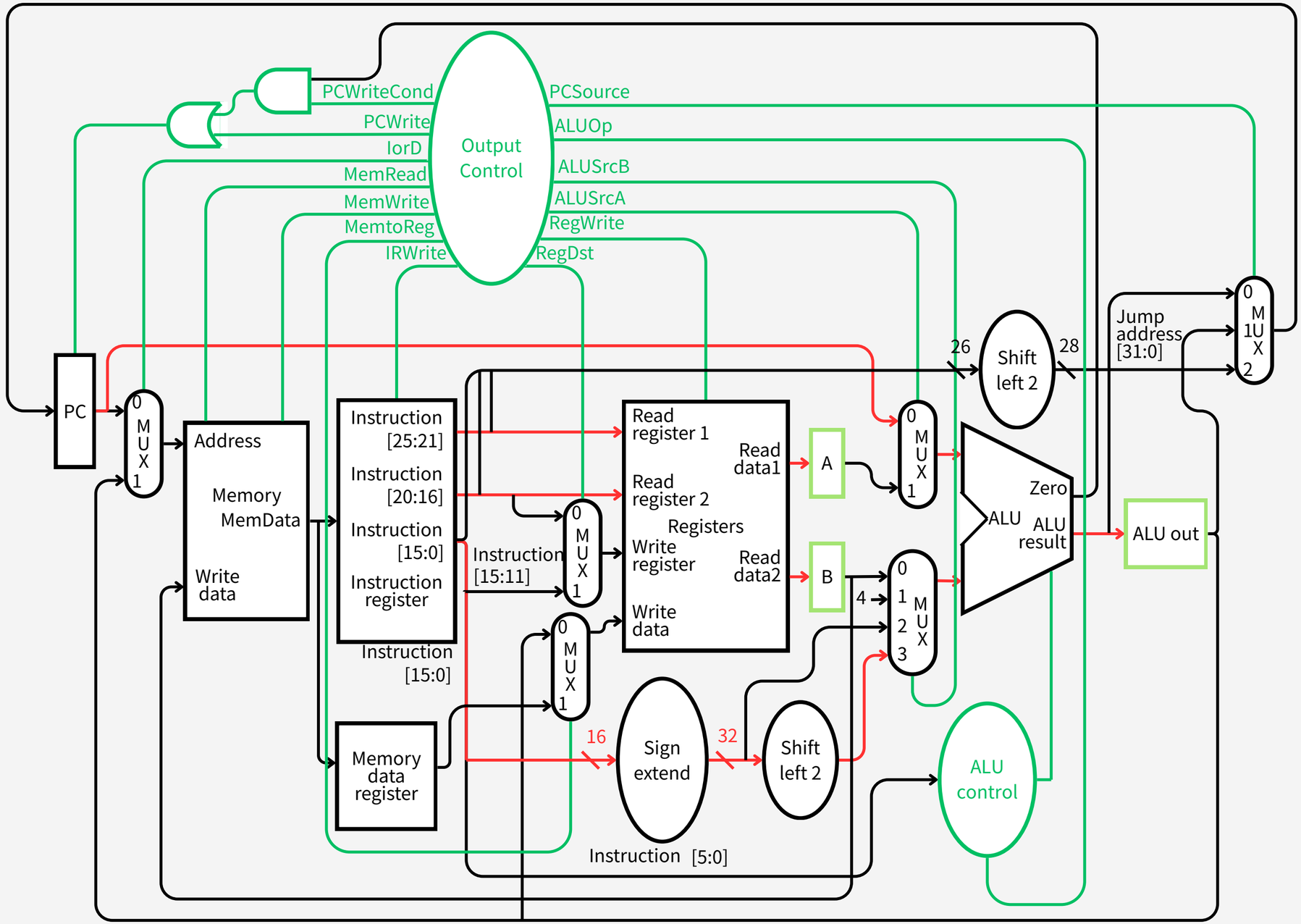
PCWriteCond
PCWrite
IorD
MemRead
MemWrite
MemtoReg
IRWrite
Output Control
PCSource
ALUOp
ALUSrcB
ALUSrcA
RegWrite
RegDst
PC
0 M U X 1
Address
Memory
MemData
Write data
Instruction [25:21]
Instruction [20:16]
Instruction [15:0]
Instruction register
Instruction [15:11]
Instruction [15:0]
Memory data register
Read register 1
Read register 2
Registers
Write register
Write data
Read data1
Read data2
A
B
4
Sign extend
16
32
Shift left 2
26
28
Jump address [31:0]
ALU
Zero
ALU result
ALU out
ALU control
Instruction [5:0]

# EX

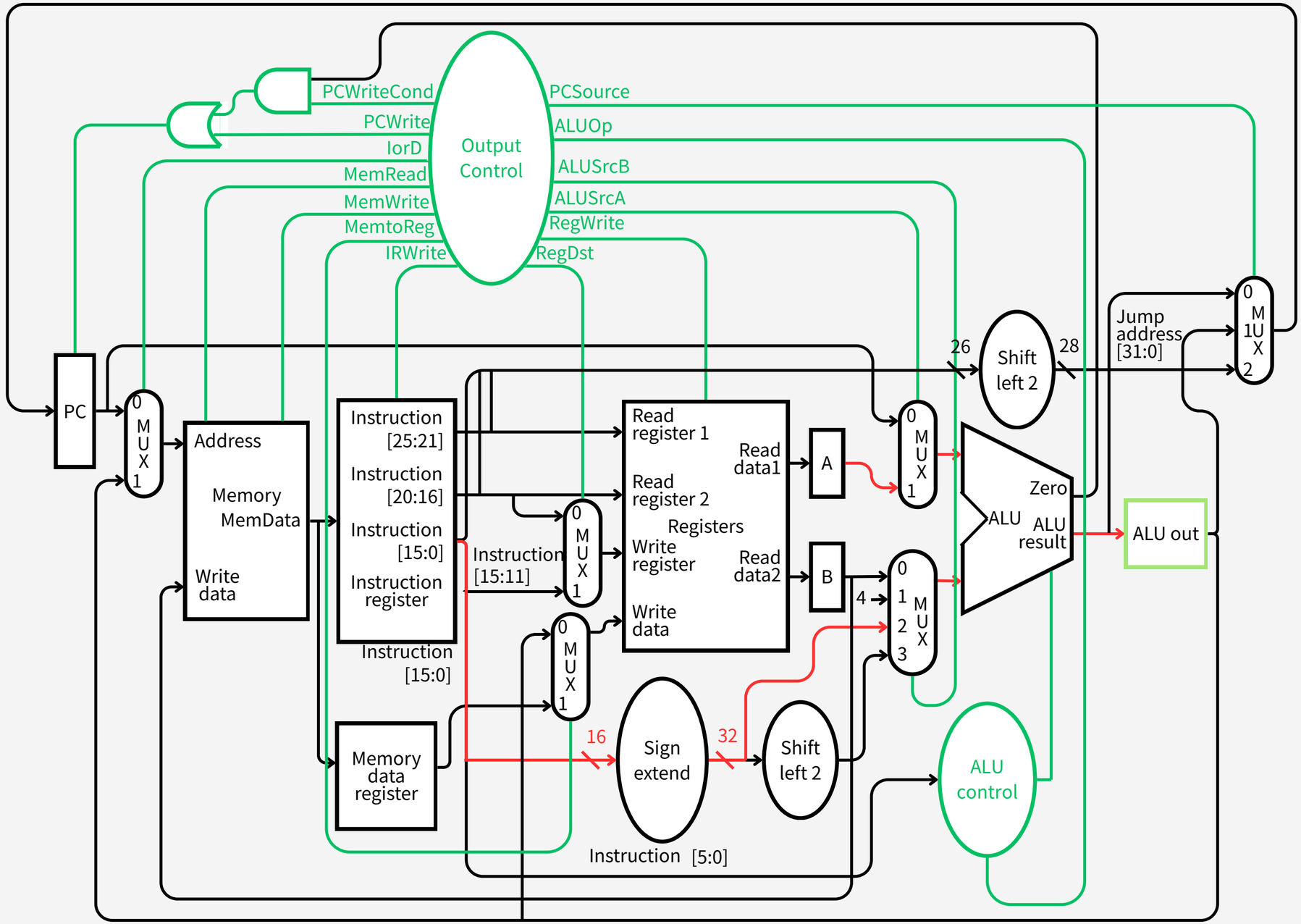
PCWriteCond
PCWrite
IorD
MemRead
MemWrite
MemtoReg
IRWrite
Output Control
PCSource
ALUOp
ALUSrcB
ALUSrcA
RegWrite
RegDst
PC
0 M U X 1
Address
Memory
MemData
Write data
Instruction [25:21]
Instruction [20:16]
Instruction [15:0]
Instruction register
Instruction [15:11]
Instruction [15:0]
Memory data register
Read register 1
Read register 2
Registers
Write register
Write data
Read data1
Read data2
A
B
4
26
Shift left 2
28
Jump address [31:0]
Zero
ALU
ALU result
ALU out
16
Sign extend
32
Shift left 2
Instruction [5:0]
ALU control

# MEM

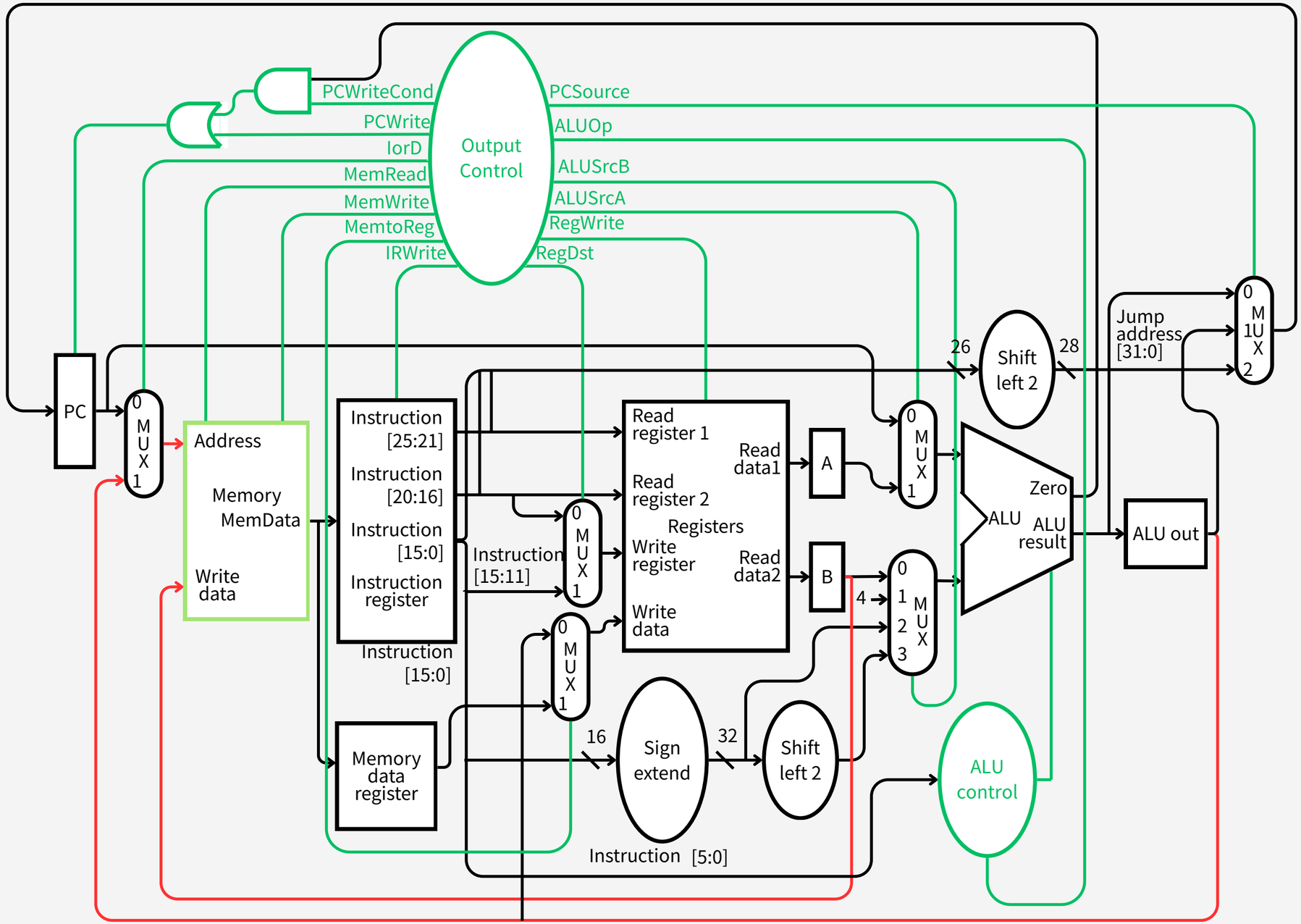
PCWriteCond
PCWrite
IorD
MemRead
MemWrite
MemtoReg
IRWrite
Output Control
PCSource
ALUOp
ALUSrcB
ALUSrcA
RegWrite
RegDst
PC
0 M U X 1
Address
Memory
MemData
Write data
Instruction [25:21]
Instruction [20:16]
Instruction [15:0]
Instruction register
Instruction [15:11]
Instruction [15:0]
Memory data register
Read register 1
Read register 2
Registers
Write register
Write data
Read data1
Read data2
A
B
4
26
Shift left 2
28
Jump address [31:0]
Zero
ALU
ALU result
ALU out
16
Sign extend
32
Shift left 2
Instruction [5:0]
ALU control

# j

j 1000

| opcode | address |
| --- | --- |
| **000010** | **00000000000000000011111010** |

IF → ID → EX

# IF

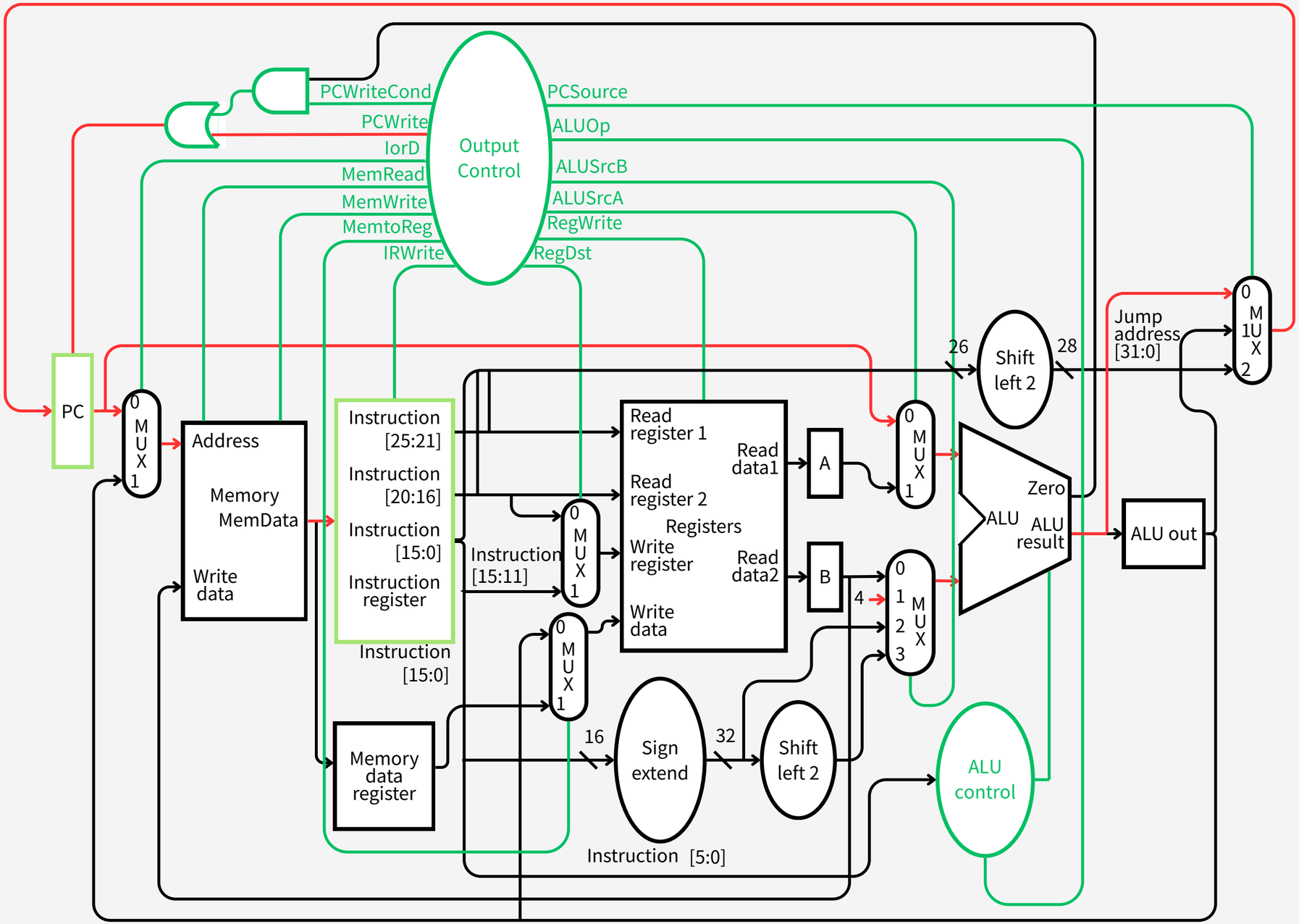
PCWriteCond
PCWrite
IorD
MemRead
MemWrite
MemtoReg
IRWrite
Output Control
PCSource
ALUOp
ALUSrcB
ALUSrcA
RegWrite
RegDst
PC
0 M U X 1
Address
Memory
MemData
Write data
Instruction [25:21]
Instruction [20:16]
Instruction [15:0]
Instruction register
Instruction [15:0]
Instruction [15:11]
0 M U X 1
0 M U X 1
Memory data register
Read register 1
Read register 2
Registers
Write register
Write data
Read data1
Read data2
A
B
4
0 1 2 3 M U X
0 M U X 1
ALU
Zero
ALU result
ALU out
26
Shift left 2
28
Jump address [31:0]
0 M U X 2
16
Sign extend
32
Shift left 2
Instruction [5:0]
ALU control

# ID

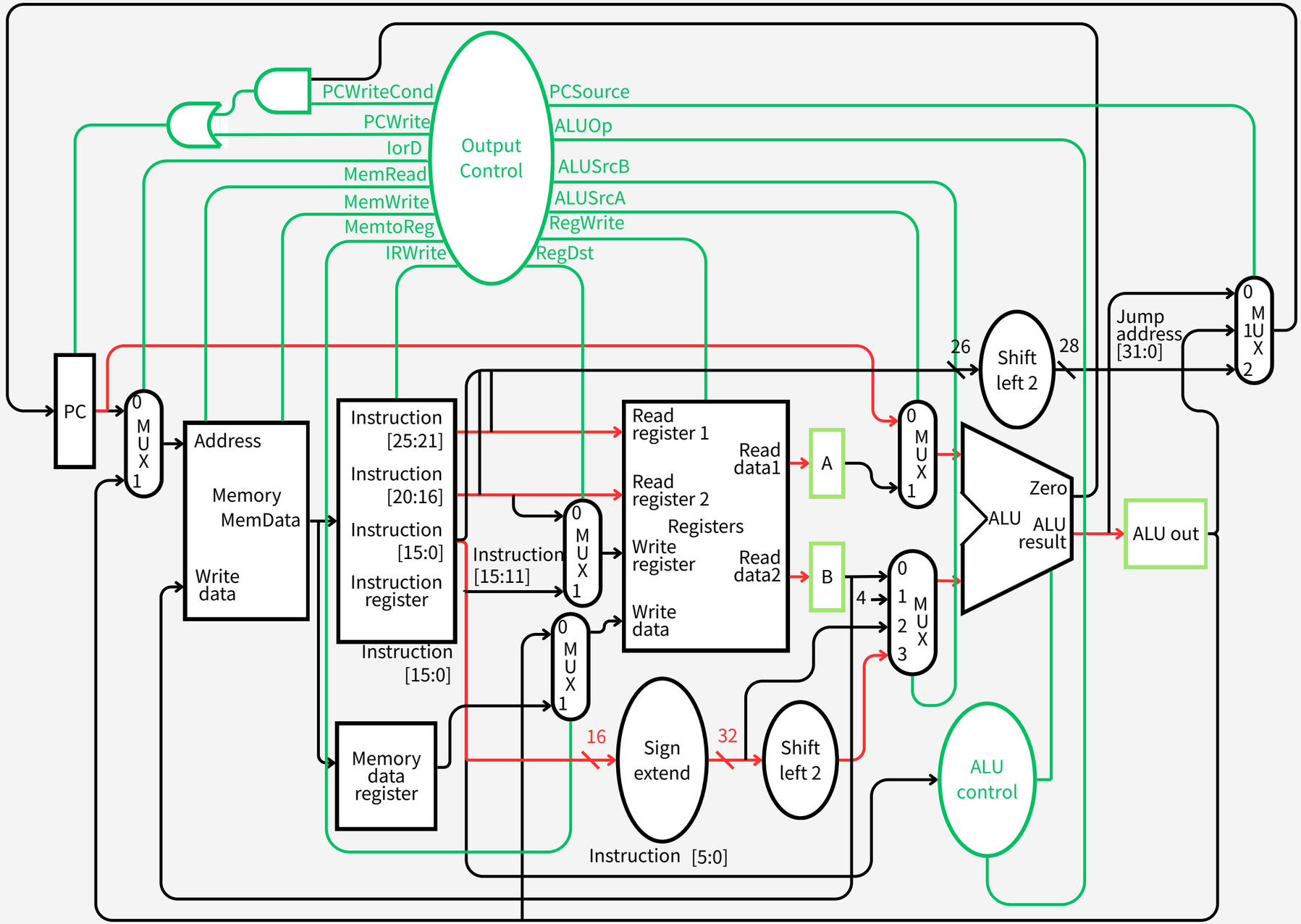
PCWriteCond
PCWrite
IorD
MemRead
MemWrite
MemtoReg
IRWrite
Output Control
PCSource
ALUOp
ALUSrcB
ALUSrcA
RegWrite
RegDst
PC
0 M U X 1
Address
Memory
MemData
Write data
Instruction [25:21]
Instruction [20:16]
Instruction [15:0]
Instruction register
Instruction [15:11]
Instruction [15:0]
Memory data register
Read register 1
Read register 2
Registers
Write register
Write data
Read data1
Read data2
A
B
4
Sign extend
16
32
Shift left 2
26
28
Jump address [31:0]
ALU
Zero
ALU result
ALU out
ALU control
Instruction [5:0]

# EX

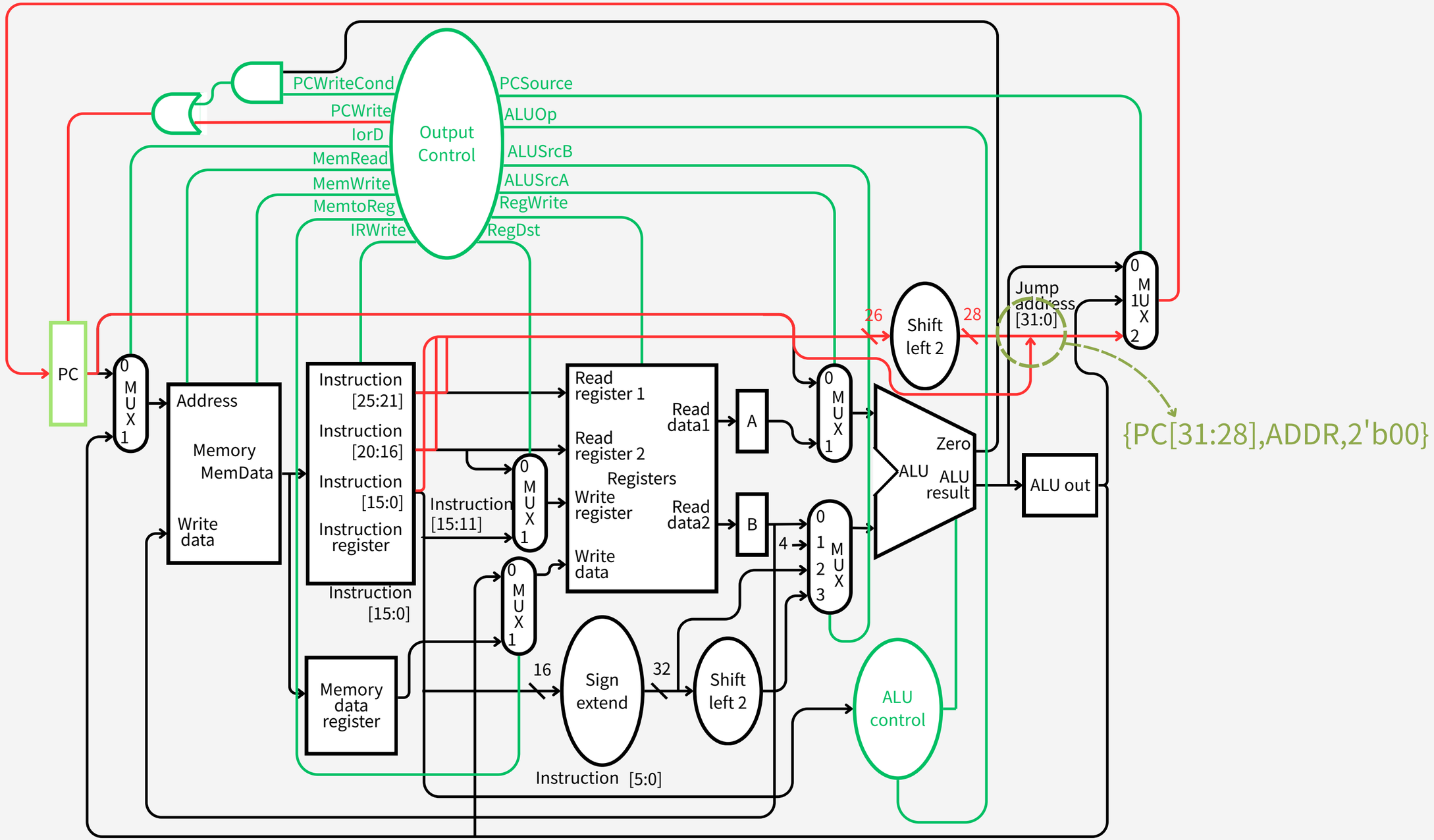
PCWriteCond
PCWrite
IorD
MemRead
MemWrite
MemtoReg
IRWrite
Output Control
PCSource
ALUOp
ALUSrcB
ALUSrcA
RegWrite
RegDst
PC
0 M U X 1
Address
Memory
MemData
Write data
Instruction [25:21]
Instruction [20:16]
Instruction [15:0]
Instruction register
Instruction [15:11]
Instruction [15:0]
Memory data register
Read register 1
Read register 2
Registers
Write register
Write data
Read data1
Read data2
A
B
4
0 1 2 3 M U X
Sign extend
16
32
Shift left 2
Instruction [5:0]
ALU control
ALU
Zero
ALU result
ALU out
26
Shift left 2
28
Jump address [31:0]
0 M 1U X 2
{PC[31:28],ADDR,2'b00}

# Control Signal

# FSM

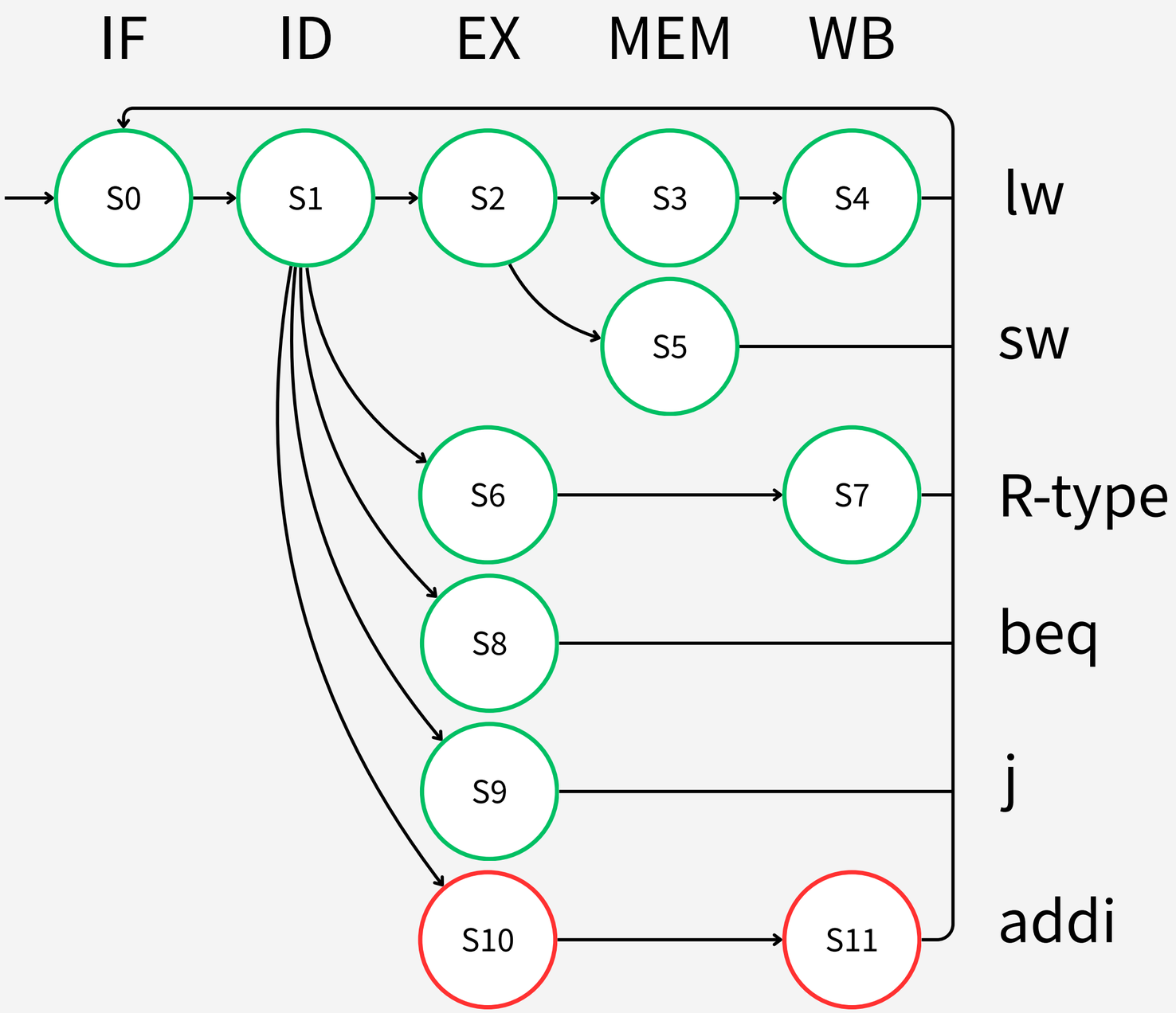
IF
ID
EX
MEM
WB
S0
S1
S2
S3
S4
S5
S6
S7
S8
S9
S10
S11
lw
sw
R-type
beq
j
addi

# State definition

| | PCWriteCond | PCWrite | IorD | MemRead | MemWrite | MemtoReg | IRWrite | PCSource | ALUOp | ALUSrcB | ALUSrcA | RegWrite | RegDst |
|---|---|---|---|---|---|---|---|---|---|---|---|---|---|
| S0 | 0 | 1 | 0 | 1 | 0 | x | 1 | 0 | 0 | 1 | 0 | 0 | x |
| S1 | 0 | 0 | x | 0 | 0 | x | 0 | 0 | 0 | 11 | 0 | 0 | x |
| S2 | 0 | 0 | 0 | 0 | 0 | x | 0 | 0 | 0 | 10 | 1 | 0 | x |
| S3 | 0 | 0 | 1 | 1 | 0 | x | 0 | 0 | 0 | x | x | 0 | x |
| S4 | 0 | 0 | x | 0 | 0 | 1 | 0 | 0 | 0 | x | x | 1 | 0 |
| S5 | 0 | 0 | 1 | 0 | 1 | x | 0 | 0 | 0 | x | x | 0 | x |
| S6 | 0 | 0 | x | 0 | 0 | x | 0 | 0 | 10 | 0 | 1 | 0 | x |
| S7 | 0 | 0 | x | 0 | 0 | 0 | 0 | 0 | 0 | x | x | 1 | 1 |
| S8 | 1 | 0 | x | 0 | 0 | x | 0 | 1 | 1 | 0 | 1 | 0 | x |
| S9 | 0 | 1 | x | 0 | 0 | x | 0 | 10 | 0 | x | x | 0 | x |
| S10 | 0 | 0 | x | 0 | 0 | x | 0 | 0 | 0 | 10 | 1 | 0 | x |
| S11 | 0 | 0 | x | 0 | 0 | 0 | 0 | 0 | 0 | x | x | 1 | 0 |

# Thanks
# the END