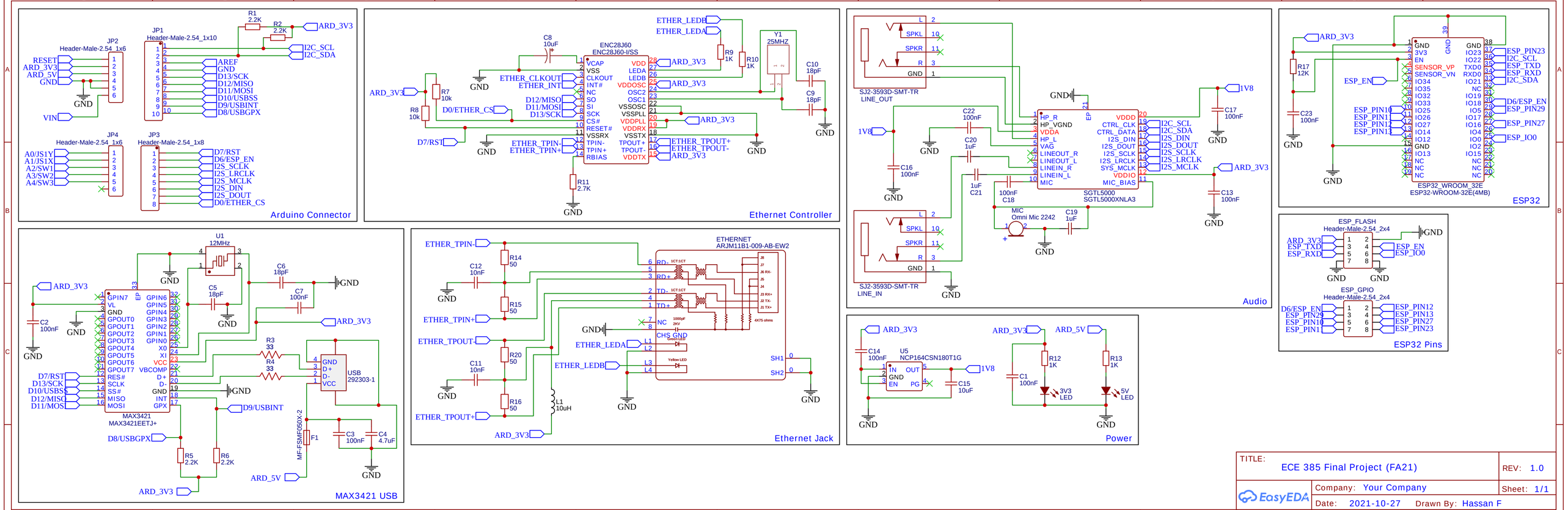
Arduino Connector
JP2
Header-Male-2.54_1x6
RESET
ARD_3V3
ARD_5V
GND
VIN
JP1
Header-Male-2.54_1x10
AREF
GND
D13/SCK
D12/MISO
D11/MOSI
D10/USBSS
D9/USBINT
D8/USBGPX
R1 2.2K
R2 2.2K
ARD_3V3
I2C_SCL
I2C_SDA
JP4
Header-Male-2.54_1x6
A0/JS1Y
A1/JS1X
A2/SW1
A3/SW2
A4/SW3
JP3
Header-Male-2.54_1x8
D7/RST
D6/ESP_EN
I2S_SCLK
I2S_LRCLK
I2S_MCLK
I2S_DIN
I2S_DOUT
D0/ETHER_CS
Ethernet Controller
ENC28J60
ENC28J60-I/SS
VCAP
VSS
CLKOUT
INT#
NC
SO
SI
SCK
CS#
RESET#
VSSRX
TPIN-
TPIN+
RBIAS
VDD
LEDA
LEDB
VDDOSC
OSC2
OSC1
VSSOSC
VSSPLL
VDDPLL
VDDRX
VSSTX
TPOUT+
TPOUT-
VDDTX
C8 10uF
R7 10k
R8 10k
R11 2.7K
R9 1K
R10 1K
Y1 25MHZ
C10 18pF
C9 18pF
ETHER_LEDB
ETHER_LEDA
ETHER_CLKOUT
ETHER_INT
D12/MISO
D11/MOSI
D13/SCK
D0/ETHER_CS
D7/RST
ETHER_TPIN-
ETHER_TPIN+
ETHER_TPOUT+
ETHER_TPOUT-
ARD_3V3
GND
Audio
SJ2-3593D-SMT-TR
LINE_OUT
SJ2-3593D-SMT-TR
LINE_IN
SPKL
SPKR
R
GND
HP_R
HP_VGND
VDDA
HP_L
VAG
LINEOUT_R
LINEOUT_L
LINEIN_R
LINEIN_L
MIC
VDDD
CTRL_CLK
CTRL_DATA
I2S_DIN
I2S_DOUT
I2S_SCLK
I2S_LRCLK
SYS_MCLK
VDDIO
MIC_BIAS
SGTL5000
SGTL5000XNLA3
I2C_SCL
I2C_SDA
I2S_DIN
I2S_DOUT
I2S_SCLK
I2S_LRCLK
I2S_MCLK
1V8
ARD_3V3
C22 100nF
C20 1uF
C16 100nF
1uF C21
100nF C18
C17 100nF
C13 100nF
C19 1uF
MIC
Omni Mic 2242
ESP32
ESP32_WROOM_32E
ESP32-WROOM-32E(4MB)
ARD_3V3
R17 12K
C23 100nF
ESP_EN
ESP_PIN10
ESP_PIN11
ESP_PIN12
ESP_PIN13
GND
3V3
EN
SENSOR_VP
SENSOR_VN
IO34
IO35
IO32
IO33
IO25
IO26
IO27
IO14
IO12
IO13
NC
IO23
IO22
TXD0
RXD0
IO21
IO19
IO18
IO5
IO17
IO16
IO4
IO0
IO2
IO15
ESP_PIN23
I2C_SCL
ESP_TXD
ESP_RXD
I2C_SDA
D6/ESP_EN
ESP_PIN29
ESP_PIN27
ESP_IO0
ESP_FLASH
Header-Male-2.54_2x4
ARD_3V3
ESP_TXD
ESP_RXD
ESP_EN
ESP_IO0
ESP_GPIO
Header-Male-2.54_2x4
D6/ESP_EN
ESP_PIN29
ESP_PIN10
ESP_PIN1
ESP_PIN12
ESP_PIN13
ESP_PIN27
ESP_PIN23
ESP32 Pins
MAX3421 USB
U1
12MHz
C6 18pF
C7 100nF
C5 18pF
C2 100nF
ARD_3V3
GND
MAX3421
MAX3421EETJ+
GPIN7
VL
GND
GPOUT0
GPOUT1
GPOUT2
GPOUT3
GPOUT4
GPOUT5
GPOUT6
GPOUT7
RES#
SCLK
SS#
MISO
MOSI
GPIN6
GPIN5
GPIN4
GPIN3
GPIN2
GPIN1
GPIN0
XI
X0
VCC
VBCOMP
D+
D-
GND
INT
GPX
D7/RST
D13/SCK
D10/USBSS
D12/MISO
D11/MOSI
D8/USBGPX
D9/USBINT
R3 33
R4 33
USB 292303-1
GND
D+
D-
VCC
MF-FSMF050X-2
F1
C3 100nF
C4 4.7uF
R5 2.2K
R6 2.2K
ARD_5V
Ethernet Jack
ETHERNET
ARJM11B1-009-AB-EW2
ETHER_TPIN-
ETHER_TPIN+
ETHER_TPOUT-
ETHER_TPOUT+
R14 50
R15 50
R20 50
R16 50
C12 10nF
C11 10nF
RD-
RD+
TD-
TD+
NC
CHS GND
1CT:1CT
1000pF 2KV
4X75 ohms
Green LED
Yellow LED
ETHER_LEDA
ETHER_LEDB
L1 10uH
SH1
SH2
J8
J7
J6 RX-
J5
J4
J3 RX+
J2 TX-
J1 TX+
Power
C14 100nF
U5
NCP164CSN180T1G
IN
OUT
GND
EN
PG
C15 10uF
1V8
C1 100nF
R12 1K
R13 1K
3V3 LED
5V LED
ARD_3V3
ARD_5V
TITLE:
ECE 385 Final Project (FA21)
REV: 1.0
Company: Your Company
Sheet: 1/1
Date: 2021-10-27
Drawn By: Hassan F
EasyEDA