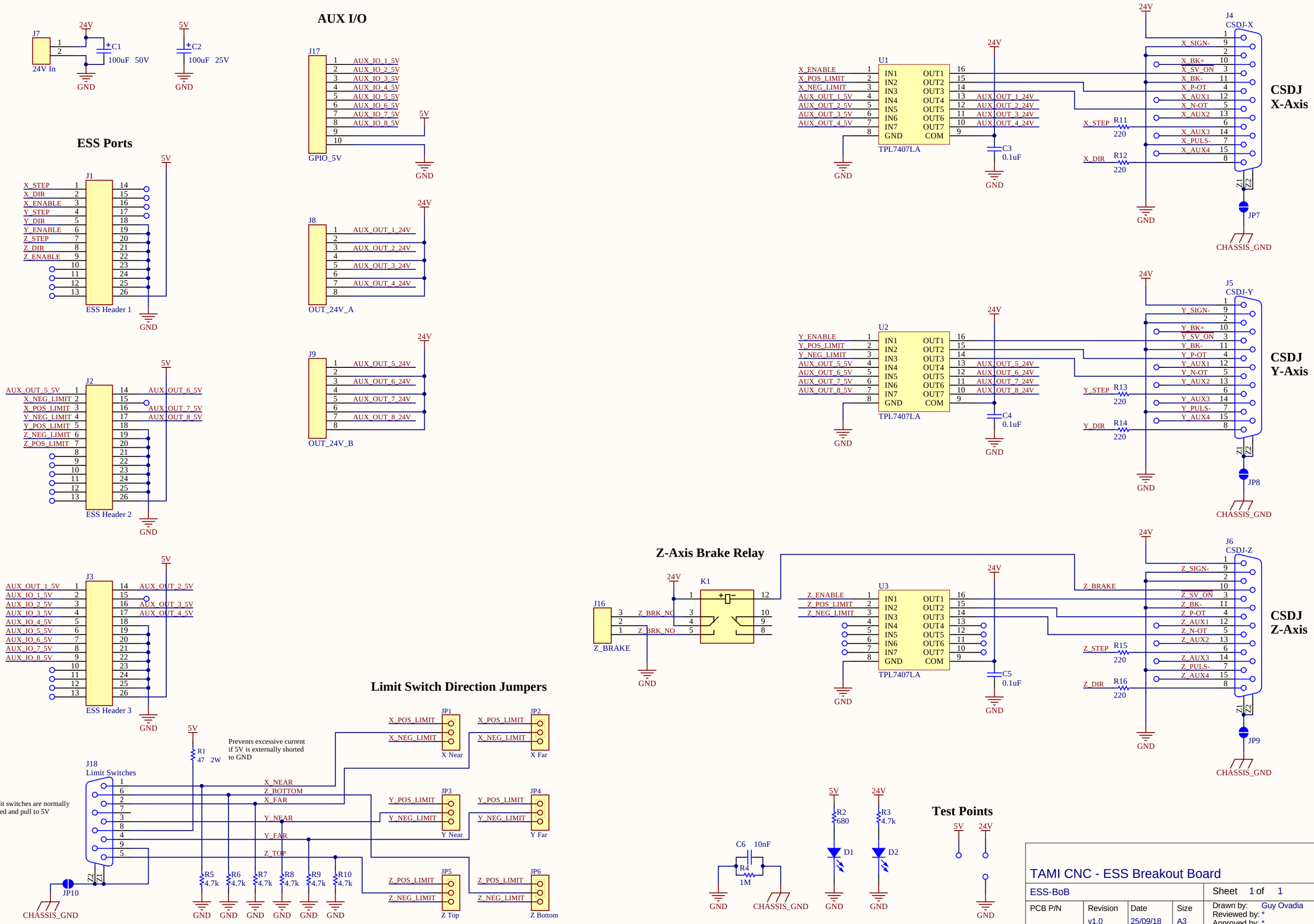
AUX I/O
ESS Ports
CSDJ X-Axis
CSDJ Y-Axis
CSDJ Z-Axis
Z-Axis Brake Relay
Limit Switch Direction Jumpers
Test Points
J7
24V In
C1
100uF 50V
C2
100uF 25V
J17
GPIO_5V
J8
OUT_24V_A
J9
OUT_24V_B
J1
ESS Header 1
J2
ESS Header 2
J3
ESS Header 3
U1
TPL7407LA
C3
0.1uF
U2
C4
0.1uF
U3
C5
0.1uF
J4
CSDJ-X
J5
CSDJ-Y
J6
CSDJ-Z
JP7
JP8
JP9
CHASSIS_GND
J16
Z_BRAKE
K1
J18
Limit Switches
Prevents excessive current if 5V is externally shorted to GND
Limit switches are normally closed and pull to 5V
R1 47 2W
JP10
JP1
X Near
JP2
X Far
JP3
Y Near
JP4
Y Far
JP5
Z Top
JP6
Z Bottom
C6 10nF
R4 1M
R2 680
R3 4.7k
D1
D2
TAMI CNC - ESS Breakout Board
ESS-BoB
Sheet 1 of 1
PCB P/N
Revision v1.0
Date 25/09/18
Size A3
Drawn by: Guy Ovadia
Reviewed by: *
Approved by: *

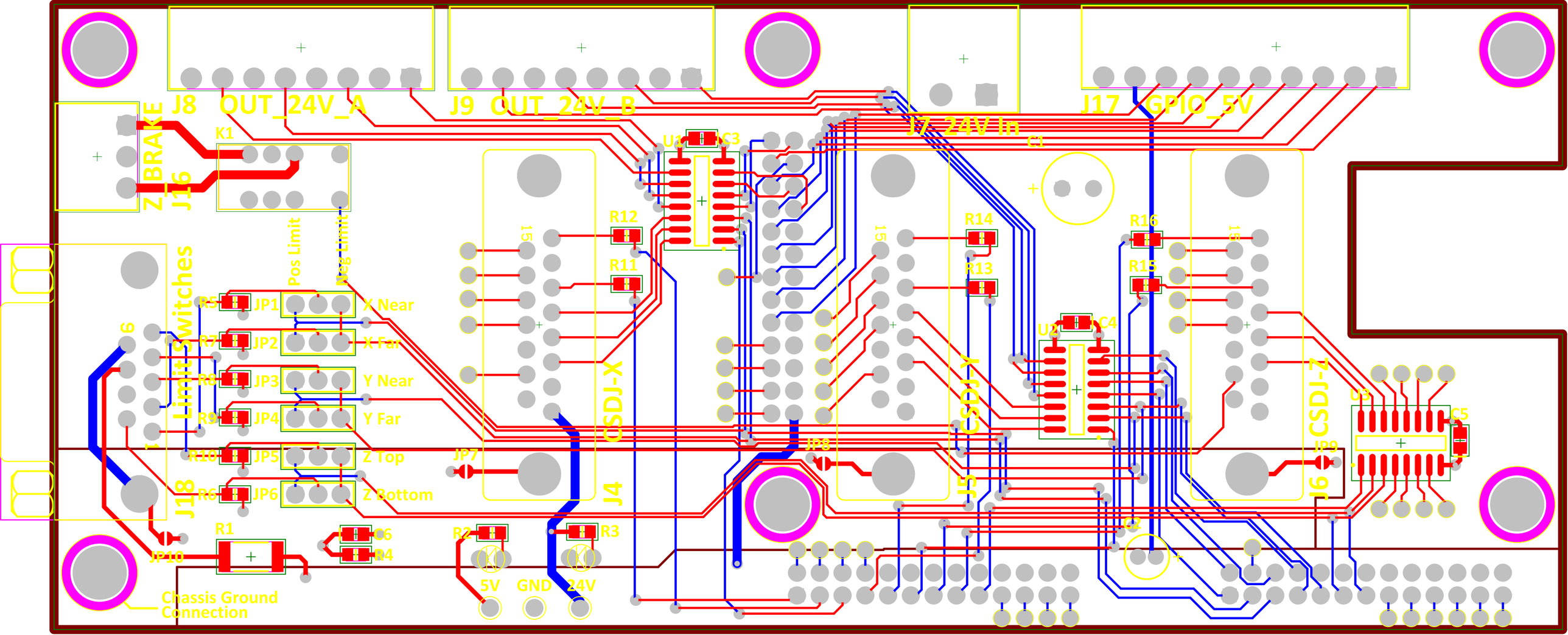
J8 OUT_24V_A
J9 OUT_24V_B
J7 24V In
J17 GPIO_5V
Z BRAKE
J16
K1
U1
C3
C1
R12
R11
R14
R13
R16
R15
U2
C4
Pos Limit
Neg Limit
Limit Switches
J18
R5
JP1
R7
JP2
R8
JP3
R9
JP4
R10
JP5
R6
JP6
X Near
X Far
Y Near
Y Far
Z Top
Z Bottom
CSDJ-X
J4
CSDJ-Y
J5
CSDJ-Z
J6
JP7
JP8
JP9
JP10
R1
C6
R4
R2
R3
5V
GND
24V
C5
Chassis Ground
Connection

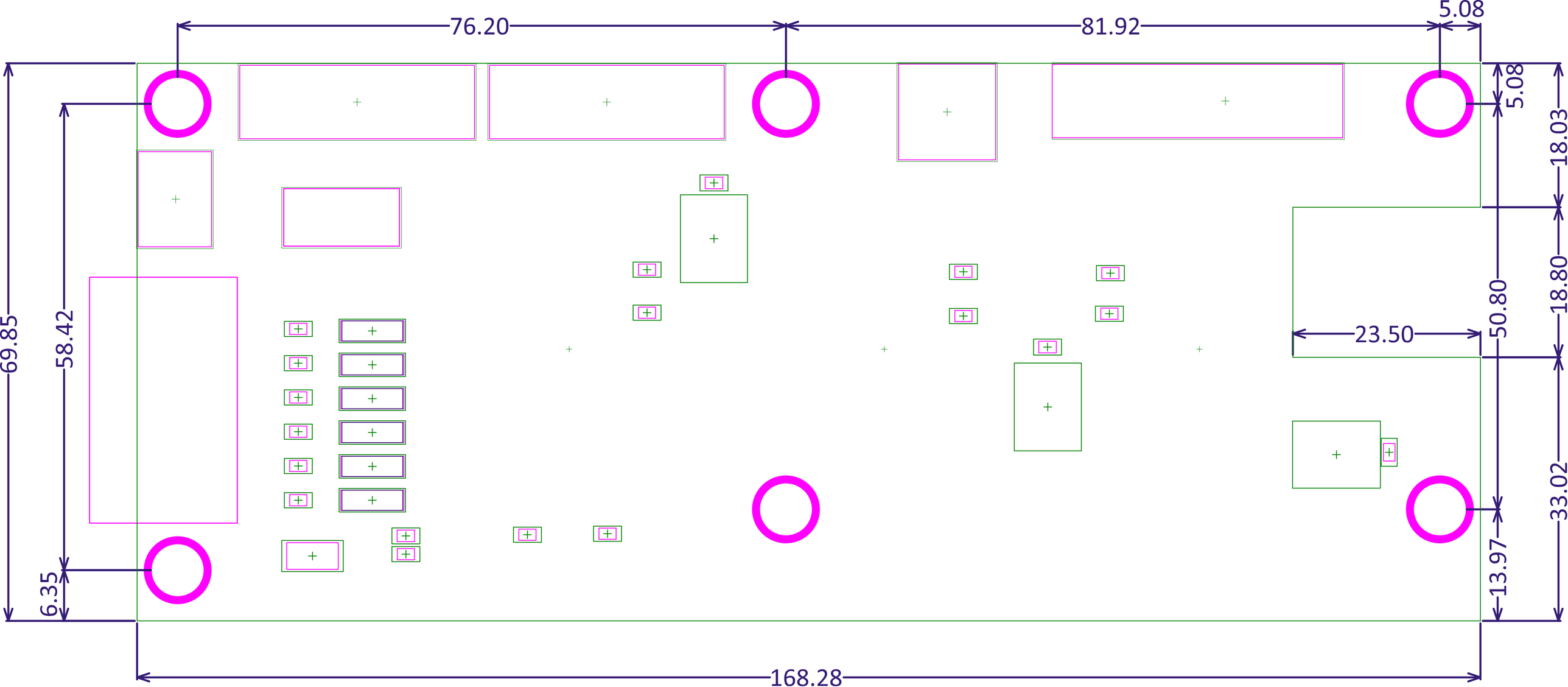
76.20
81.92
5.08
5.08
18.03
18.80
50.80
23.50
33.02
13.97
69.85
58.42
6.35
168.28

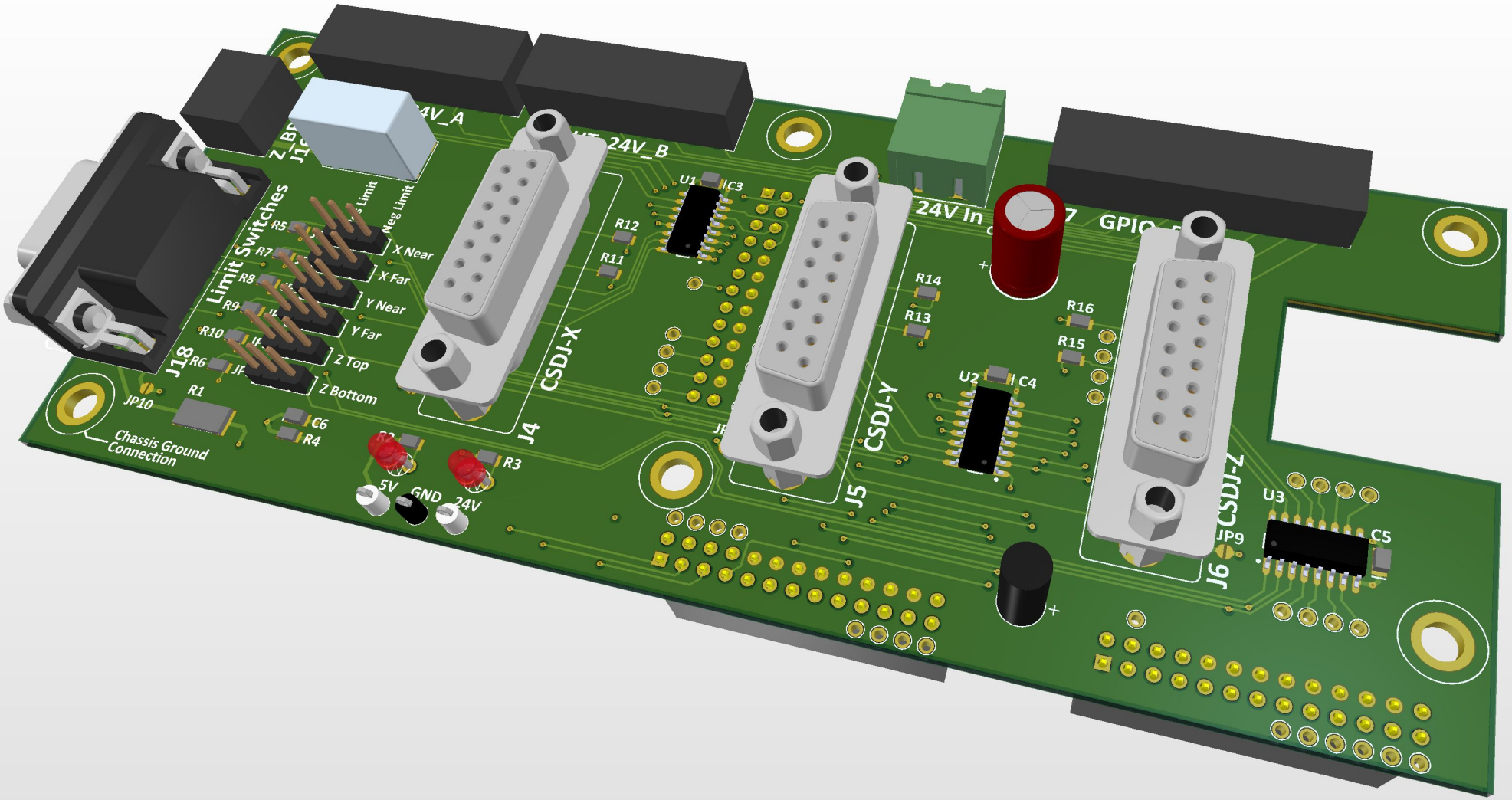
Limit Switches
X Near
X Far
Y Near
Y Far
Z Top
Z Bottom
Neg Limit
J18
JP10
R1
R5
R6
R7
R8
R9
R10
C6
R4
Chassis Ground Connection
5V
GND
24V
R2
R3
CSDJ-X
J4
U1
C3
R12
R11
CSDJ-Y
J5
U2
C4
R14
R13
24V In
R16
R15
GPIO
CSDJ-Z
J6
U3
C5
JP9

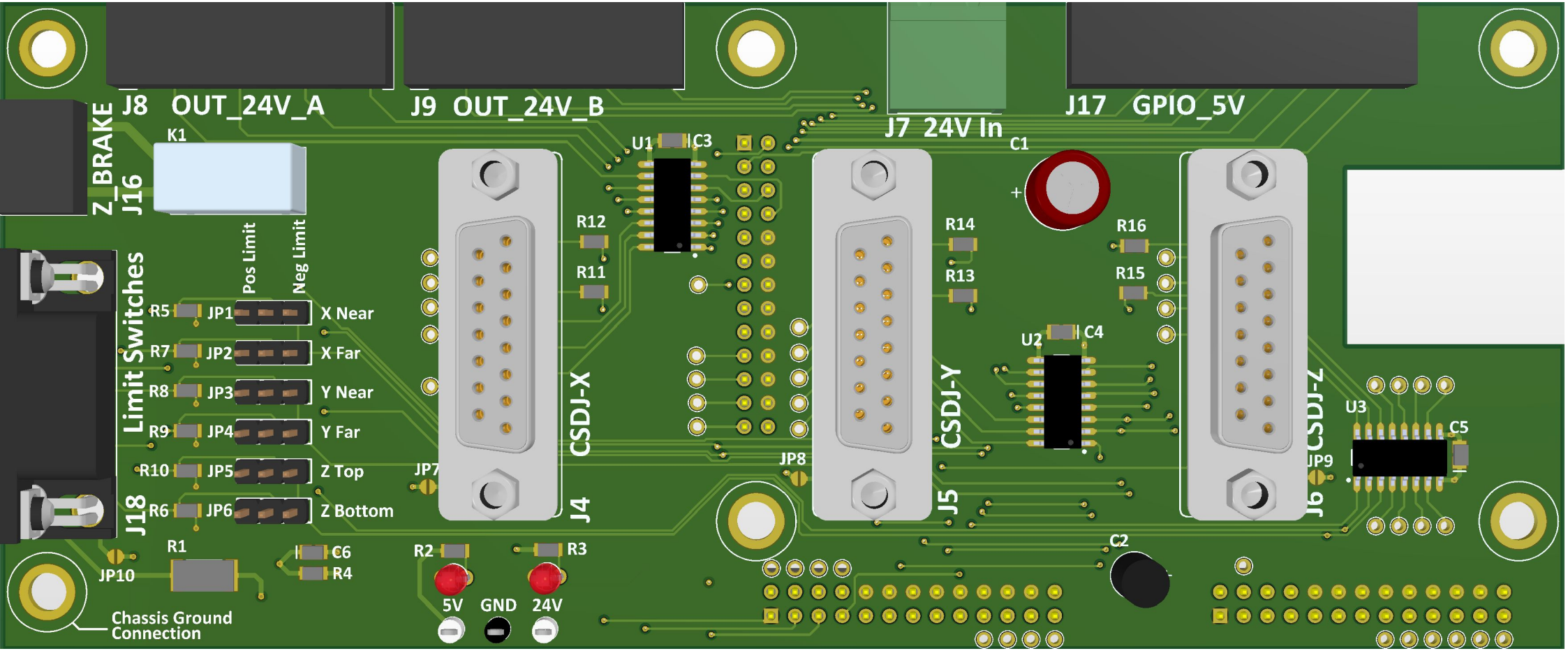
J8 OUT_24V_A
J9 OUT_24V_B
J7 24V In
J17 GPIO_5V
Z_BRAKE
J16
K1
Limit Switches
Pos Limit
Neg Limit
R5 JP1 X Near
R7 JP2 X Far
R8 JP3 Y Near
R9 JP4 Y Far
R10 JP5 Z Top
R6 JP6 Z Bottom
J18
JP10
R1
C6
R4
Chassis Ground Connection
R2
R3
5V
GND
24V
JP7
CSDJ-X
J4
U1
C3
R12
R11
JP8
CSDJ-Y
J5
R14
R13
U2
C4
C1
C2
R16
R15
JP9
CSDJ-Z
J6
U3
C5

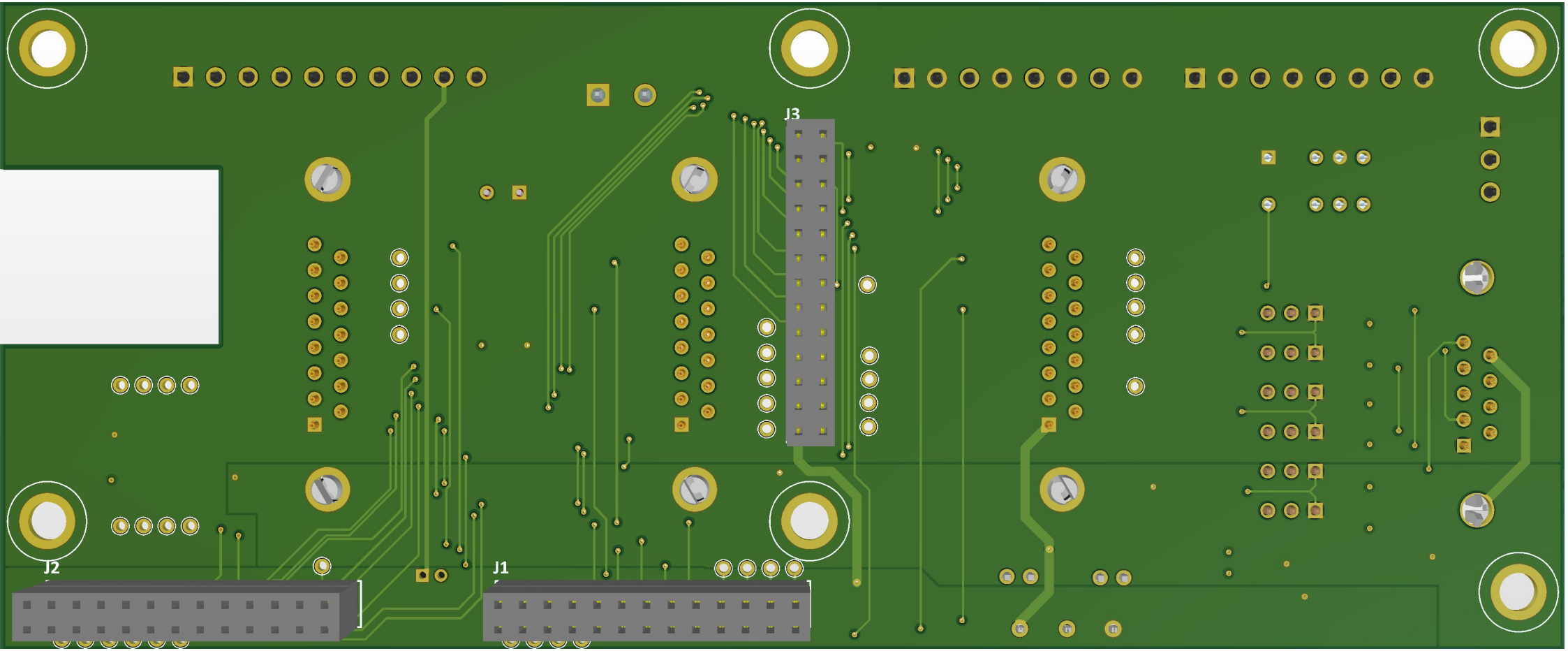
J3
J2
J1