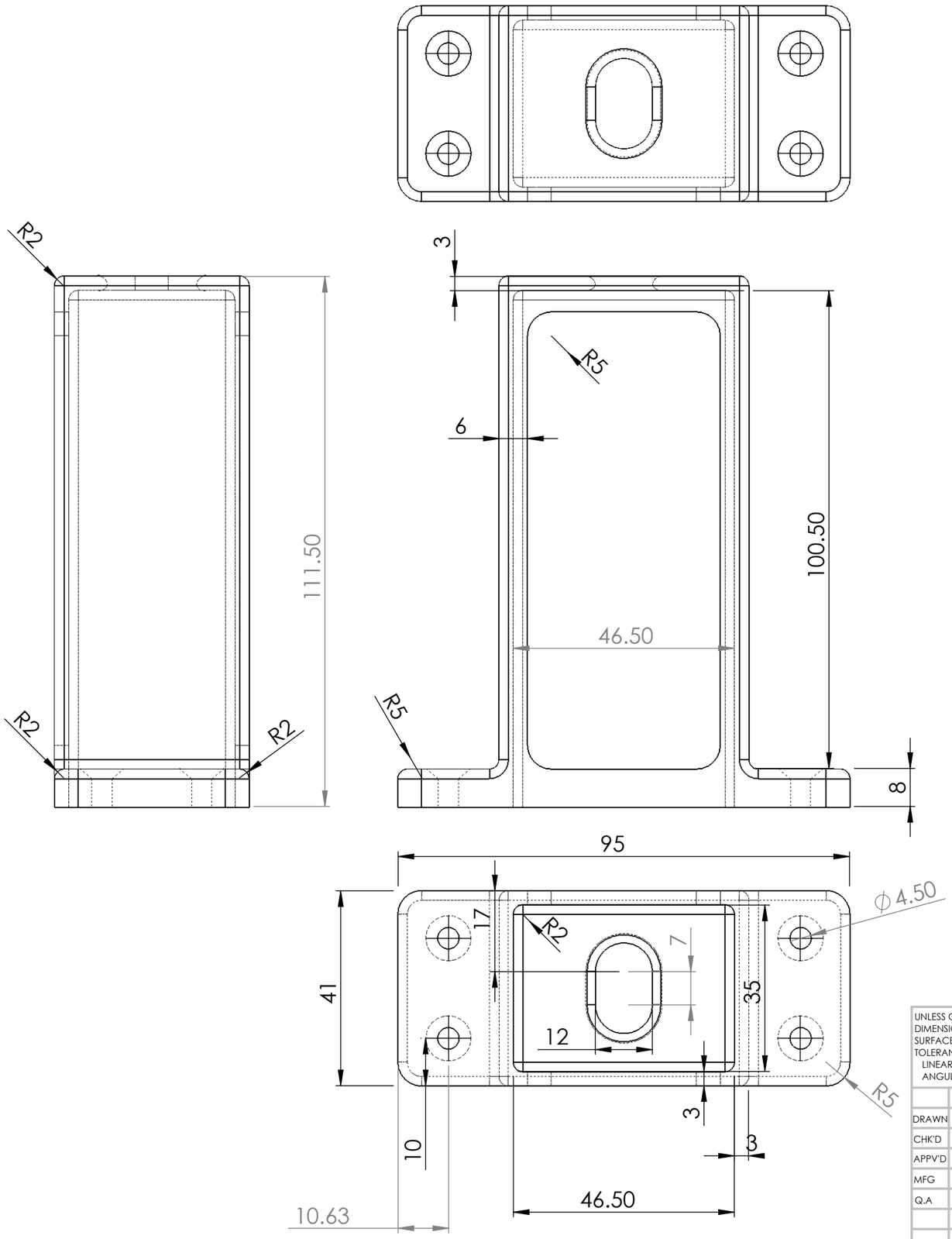

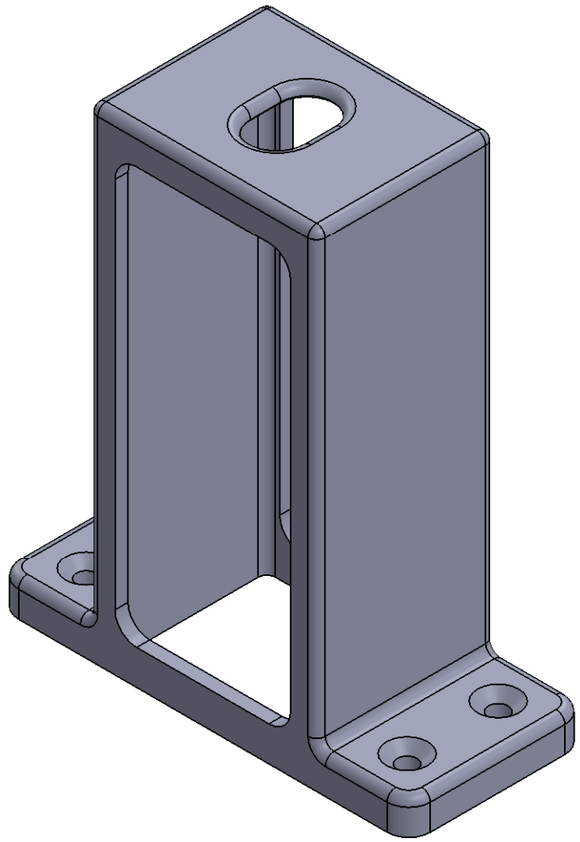

UNLESS OTHERWISE SPECIFIED: DIMENSIONS ARE IN MILLIMETERS SURFACE FINISH: TOLERANCES: LINEAR: ANGULAR:	FINISH: PLA 3D Print. 0.15mm layer height. 30% infill. Support required.			DEBUR AND BREAK SHARP EDGES	DO NOT SCALE DRAWING	REVISION : 1.0
	NAME	SIGNATURE	DATE		TITLE:	
DRAWN	Mark Kobine		1/7/19			
CHK'D						
APPV'D						
MFG						
Q.A				MATERIAL: PLA, PET-G or ABS	DWG NO. PSU bracket	A3
				WEIGHT:	SCALE:1:1	SHEET 1 OF 1