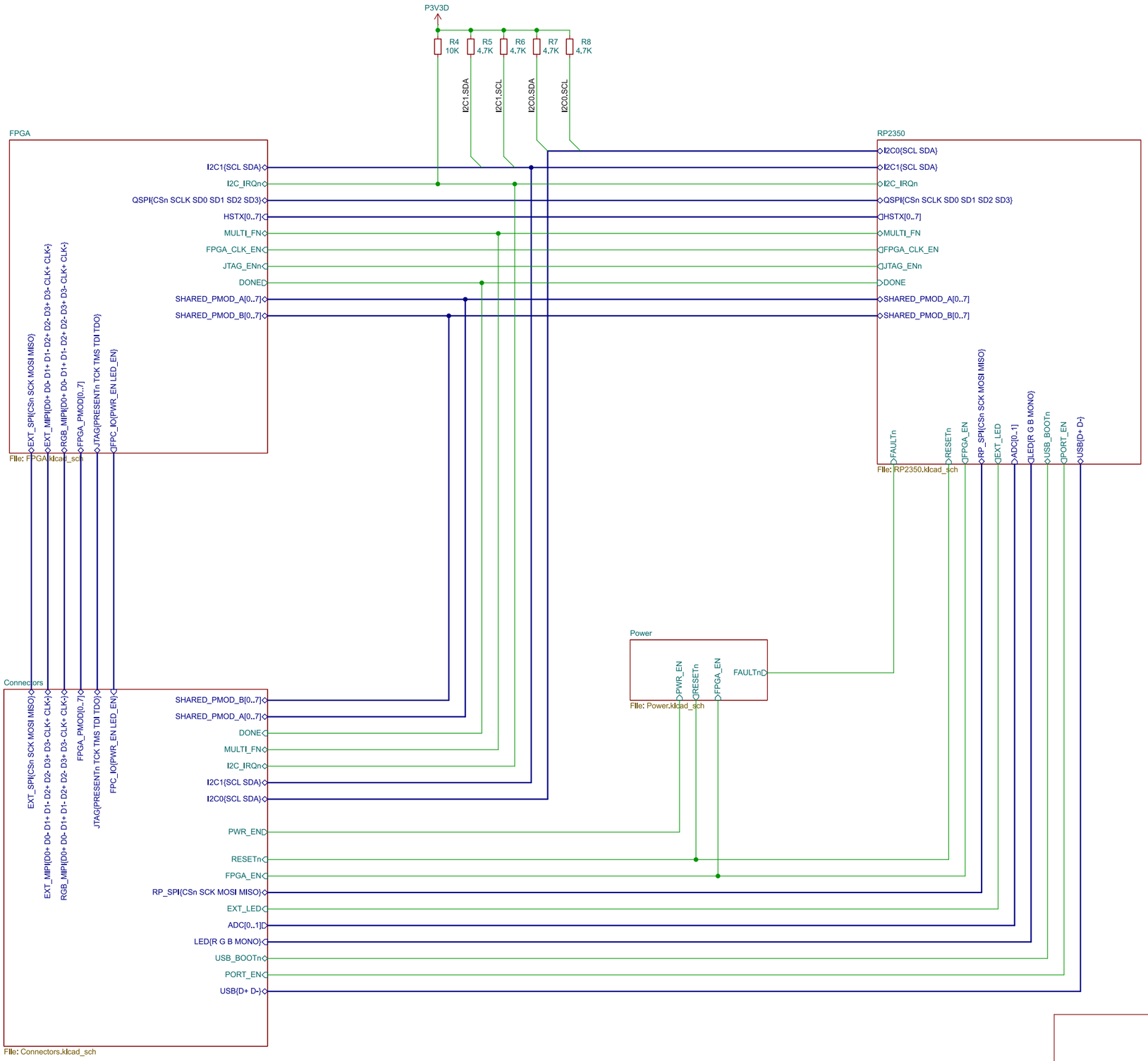


## Power Diagram

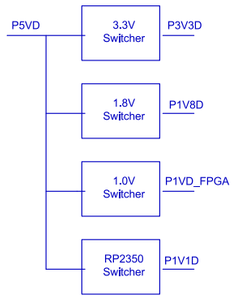


TODO:
- additional ESD protection?
- should 3.3V be a switcher or an LDO?

**tinyVision.ai Inc.**

Sheet: /
File: pico2-nx.kicad_sch

***Title: PICO2-NX***

| | | |
|---|---|---|
| Size: A3 | Date: 2025-06-03 | **Rev: 0.1** |
| KiCad E.D.A. 8.0.4 | | Id: 1/5 |

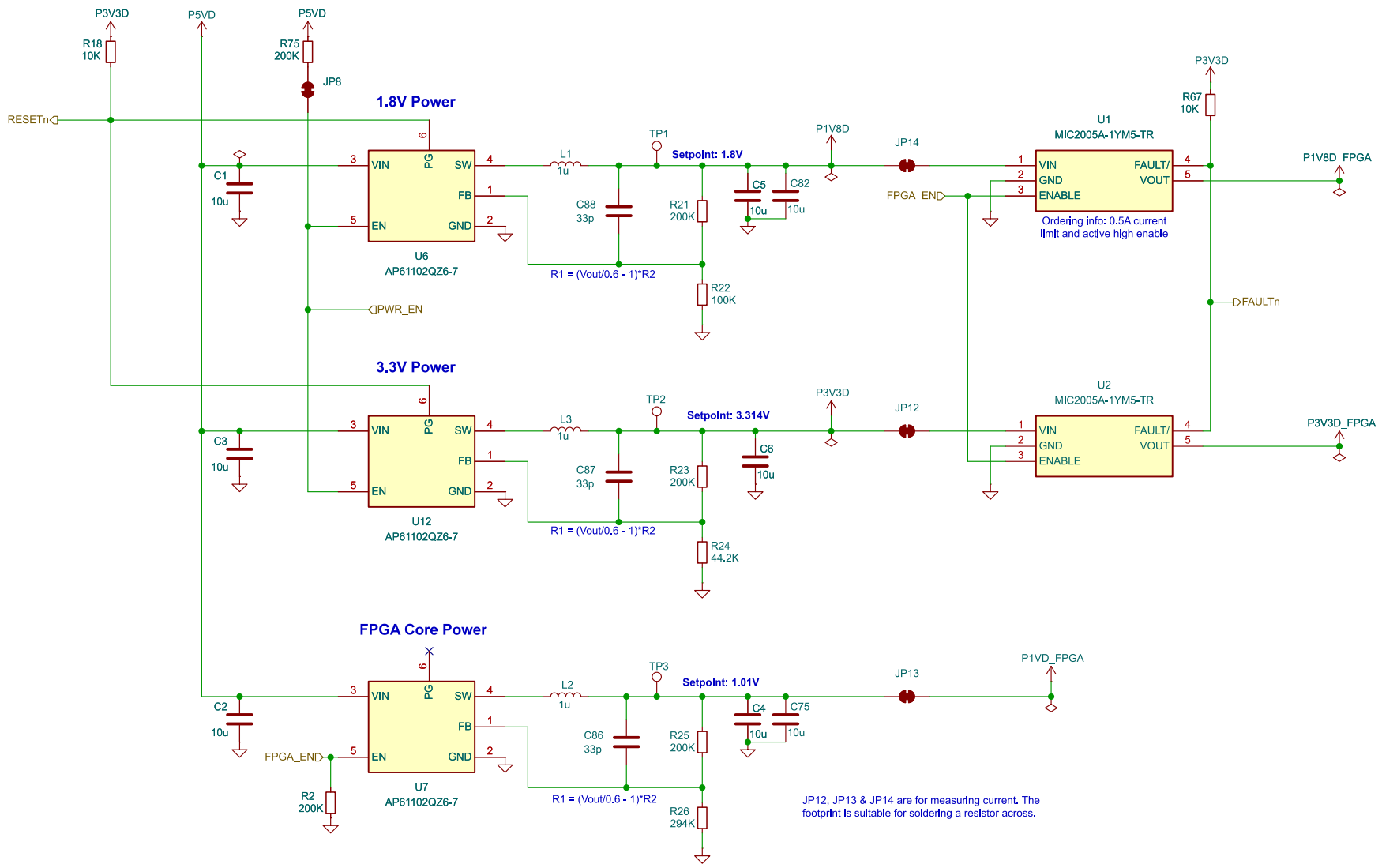


Power Modes:
OFF: EN < 0.9V, uA level current
PWM Mode: 0.91 (type) < EN < P5V-200mV
PFM Mode: P5V-200mV < EN < P5V

**tinyVision.ai Inc.**

Sheet: /Power/
File: Power.kicad_sch

***Title: PICO2-NX***

| | | |
|---|---|---|
| Size: A4 | Date: | **Rev: 0.1** |
| KiCad E.D.A. 8.0.4 | | Id: 2/5 |

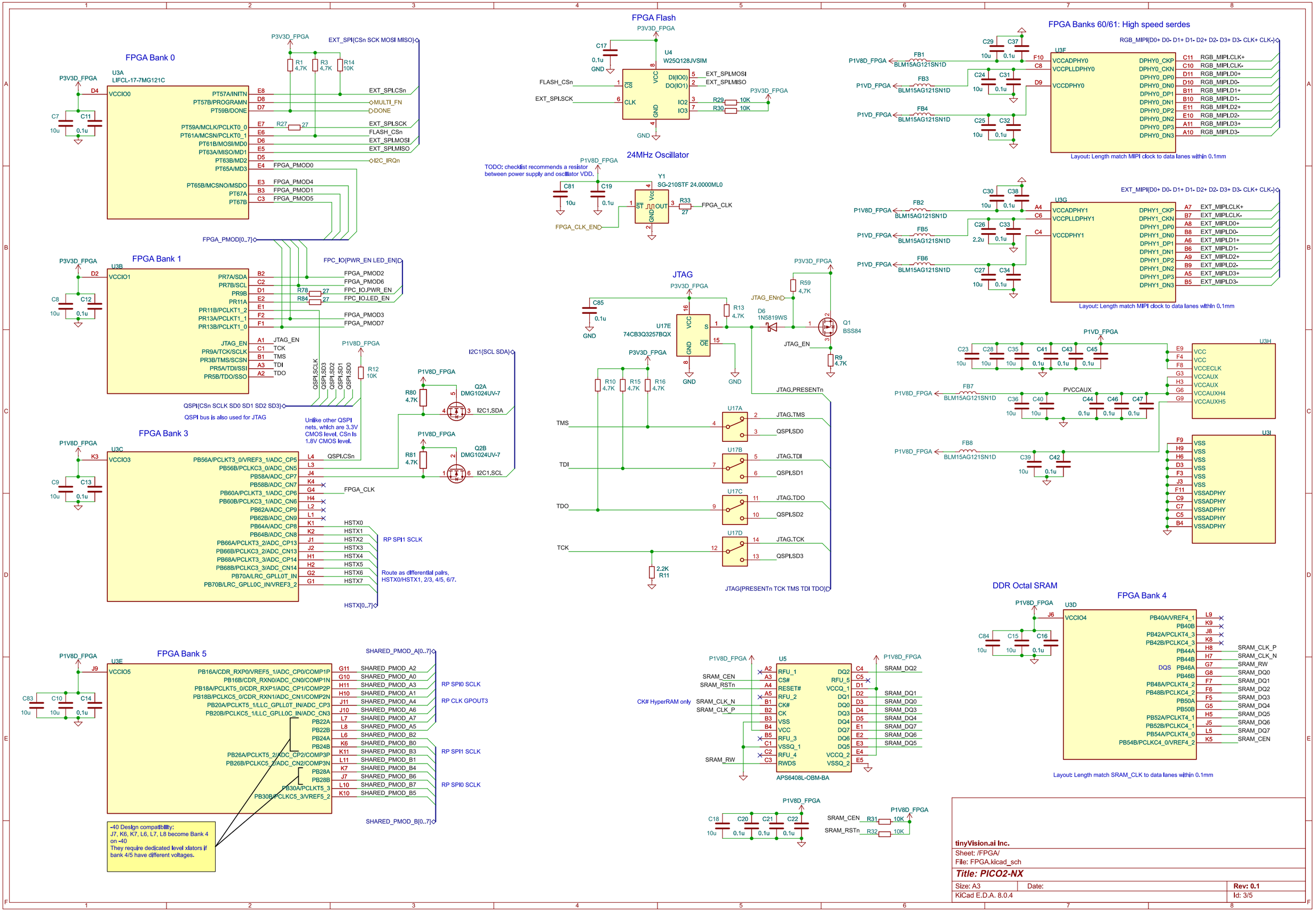


tinyVision.ai Inc.

Sheet: /FPGA/

File: FPGA.kicad_sch

**Title: PICO2-NX**

| Size: A3 | Date: | Rev: 0.1 |
|---|---|---|
| KiCad E.D.A. 8.0.4 | | Id: 3/5 |

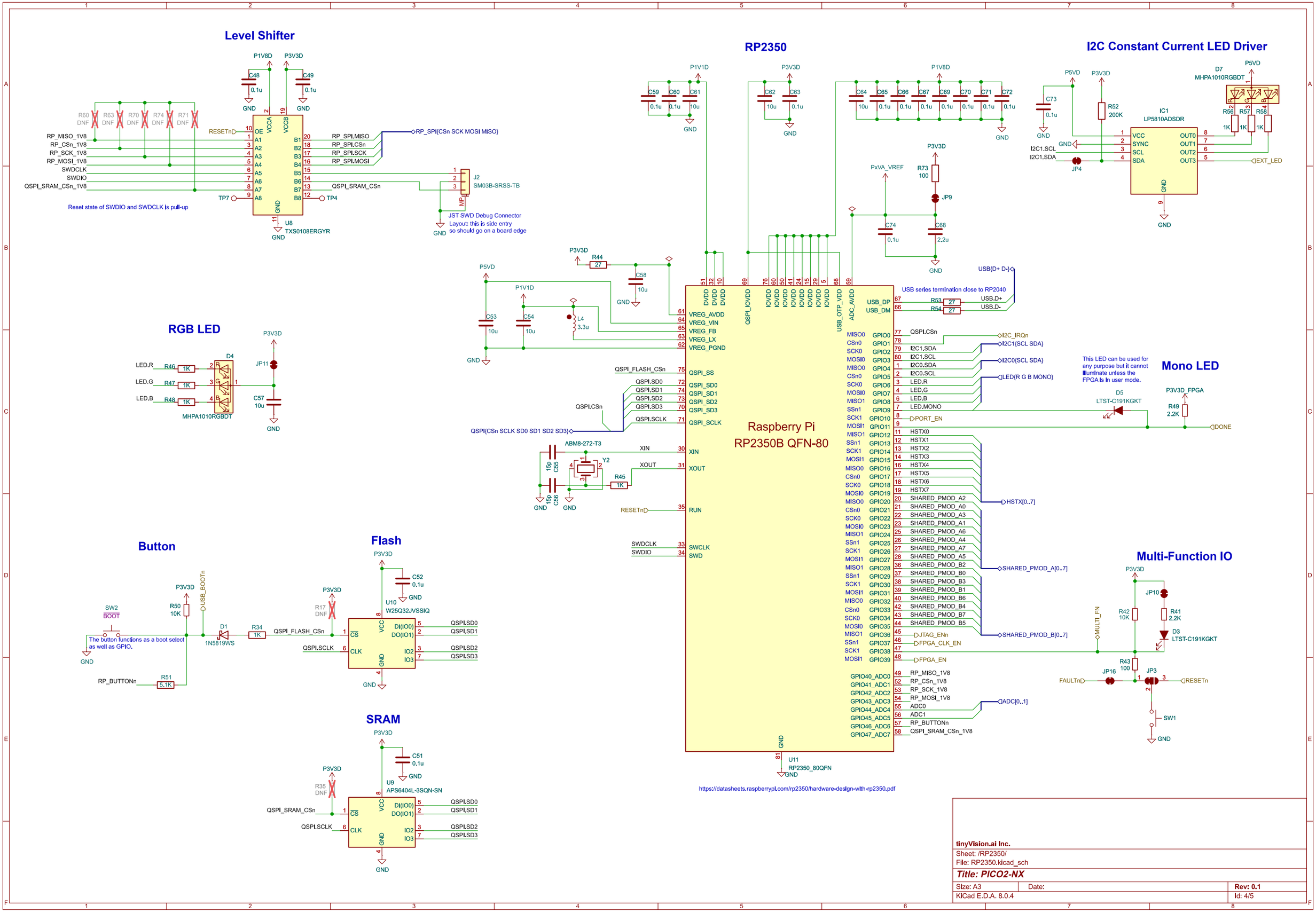
Level Shifter
P1V8D
P3V3D
C48 0.1u
C49 0.1u
GND
R60 DNF
R63 DNF
R70 DNF
R74 DNF
R71 DNF
RESETn
RP_MISO_1V8
RP_CSn_1V8
RP_SCK_1V8
RP_MOSI_1V8
SWDCLK
SWDIO
QSPI_SRAM_CSn_1V8
TP7
VCCA
VCCB
OE
A1 A2 A3 A4 A5 A6 A7 A8
B1 B2 B3 B4 B5 B6 B7 B8
RP_SPI.MISO
RP_SPI.CSn
RP_SPI.SCK
RP_SPI.MOSI
QSPI_SRAM_CSn
TP4
RP_SPI{CSn SCK MOSI MISO}
J2
SM03B-SRSS-TB
MP
U8
TXS0108ERGYR
Reset state of SWDIO and SWDCLK is pull-up
JST SWD Debug Connector
Layout: this is side entry
so should go on a board edge
RP2350
P1V1D
C59 0.1u
C60 0.1u
C61 10u
P3V3D
C62 10u
C63 0.1u
P1V8D
C64 10u
C65 0.1u
C66 0.1u
C67 0.1u
C69 0.1u
C70 0.1u
C71 0.1u
C72 0.1u
P3V3D
R73 100
JP9
PxVA_VREF
C74 0.1u
C68 2.2u
USB{D+ D-}
USB series termination close to RP2040
R53 27
R54 27
USB.D+
USB.D-
P3V3D
R44 27
C58 10u
P5VD
P1V1D
C53 10u
C54 10u
L4 3.3u
DVDD
VREG_AVDD
VREG_VIN
VREG_FB
VREG_LX
VREG_PGND
QSPI_IOVDD
IOVDD
USB_OTP_VDD
ADC_AVDD
USB_DP
USB_DM
QSPI_FLASH_CSn
QSPI_SS
QSPI_SD0
QSPI_SD1
QSPI_SD2
QSPI_SD3
QSPI_SCLK
QSPI.CSn
QSPI.SD0
QSPI.SD1
QSPI.SD2
QSPI.SD3
QSPI.SCLK
QSPI{CSn SCLK SD0 SD1 SD2 SD3}
ABM8-272-T3
Y2
15p C55
15p C56
XIN
XOUT
R45 1K
RESETn
RUN
SWDCLK
SWDIO
SWCLK
SWD
Raspberry Pi
RP2350B QFN-80
MISO0 GPIO0
CSn0 GPIO1
SCK0 GPIO2
MOSI0 GPIO3
MISO0 GPIO4
CSn0 GPIO5
SCK0 GPIO6
MOSI0 GPIO7
MISO1 GPIO8
SSn1 GPIO9
SCK1 GPIO10
MOSI1 GPIO11
MISO1 GPIO12
SSn1 GPIO13
SCK1 GPIO14
MOSI1 GPIO15
MISO0 GPIO16
CSn0 GPIO17
SCK0 GPIO18
MOSI0 GPIO19
MISO0 GPIO20
CSn0 GPIO21
SCK0 GPIO22
MOSI0 GPIO23
MISO1 GPIO24
SSn1 GPIO25
SCK1 GPIO26
MOSI1 GPIO27
MISO1 GPIO28
SSn1 GPIO29
SCK1 GPIO30
MOSI1 GPIO31
MISO0 GPIO32
CSn0 GPIO33
SCK0 GPIO34
MOSI0 GPIO35
MISO1 GPIO36
SSn1 GPIO37
SCK1 GPIO38
MOSI1 GPIO39
GPIO40_ADC0
GPIO41_ADC1
GPIO42_ADC2
GPIO43_ADC3
GPIO44_ADC4
GPIO45_ADC5
GPIO46_ADC6
GPIO47_ADC7
QSPI.CSn
I2C1.SDA
I2C1.SCL
I2C0.SDA
I2C0.SCL
LED.R
LED.G
LED.B
LED.MONO
PORT_EN
HSTX0
HSTX1
HSTX2
HSTX3
HSTX4
HSTX5
HSTX6
HSTX7
SHARED_PMOD_A2
SHARED_PMOD_A0
SHARED_PMOD_A3
SHARED_PMOD_A1
SHARED_PMOD_A6
SHARED_PMOD_A4
SHARED_PMOD_A7
SHARED_PMOD_A5
SHARED_PMOD_B2
SHARED_PMOD_B0
SHARED_PMOD_B3
SHARED_PMOD_B1
SHARED_PMOD_B6
SHARED_PMOD_B4
SHARED_PMOD_B7
SHARED_PMOD_B5
JTAG_ENn
FPGA_CLK_EN
FPGA_EN
RP_MISO_1V8
RP_CSn_1V8
RP_SCK_1V8
RP_MOSI_1V8
ADC0
ADC1
RP_BUTTONn
QSPI_SRAM_CSn_1V8
I2C_IRQn
I2C1{SCL SDA}
I2C0{SCL SDA}
LED{R G B MONO}
HSTX[0..7]
SHARED_PMOD_A[0..7]
SHARED_PMOD_B[0..7]
ADC[0..1]
U11
RP2350_80QFN
https://datasheets.raspberrypi.com/rp2350/hardware-design-with-rp2350.pdf
I2C Constant Current LED Driver
P5VD
P3V3D
C73 0.1u
R52 200K
D7
MHPA1010RGBDT
R56 1K
R57 1K
R58 1K
IC1
LP5810ADSDR
VCC
SYNC
SCL
SDA
OUT0
OUT1
OUT2
OUT3
I2C1.SCL
I2C1.SDA
JP4
EXT_LED
RGB LED
LED.R
LED.G
LED.B
R46 1K
R47 1K
R48 1K
D4
MHPA1010RGBDT
JP11
C57 10u
This LED can be used for any purpose but it cannot illuminate unless the FPGA is in user mode.
Mono LED
D5
LTST-C191KGKT
P3V3D_FPGA
R49 2.2K
DONE
Button
SW2
BOOT
P3V3D
R50 10K
USB_BOOTn
D1
1N5819WS
R34 1K
QSPI_FLASH_CSn
The button functions as a boot select as well as GPIO.
RP_BUTTONn
R51 5.1K
Flash
P3V3D
C52 0.1u
R17 DNF
U10
W25Q32JVSSIQ
VCC
CS
CLK
GND
DI(IO0)
DO(IO1)
IO2
IO3
QSPI.SD0
QSPI.SD1
QSPI.SD2
QSPI.SD3
QSPI.SCLK
Multi-Function IO
P3V3D
JP10
R42 10K
R41 2.2K
MULTI_FN
D3
LTST-C191KGKT
R43 100
FAULTn
JP16
JP3
RESETn
SW1
SRAM
P3V3D
C51 0.1u
R35 DNF
U9
APS6404L-3SQN-SN
QSPI_SRAM_CSn
QSPI.SCLK
QSPI.SD0
QSPI.SD1
QSPI.SD2
QSPI.SD3
tinyVision.ai Inc.
Sheet: /RP2350/
File: RP2350.kicad_sch
Title: PICO2-NX
Size: A3
Date:
Rev: 0.1
KiCad E.D.A. 8.0.4
Id: 4/5

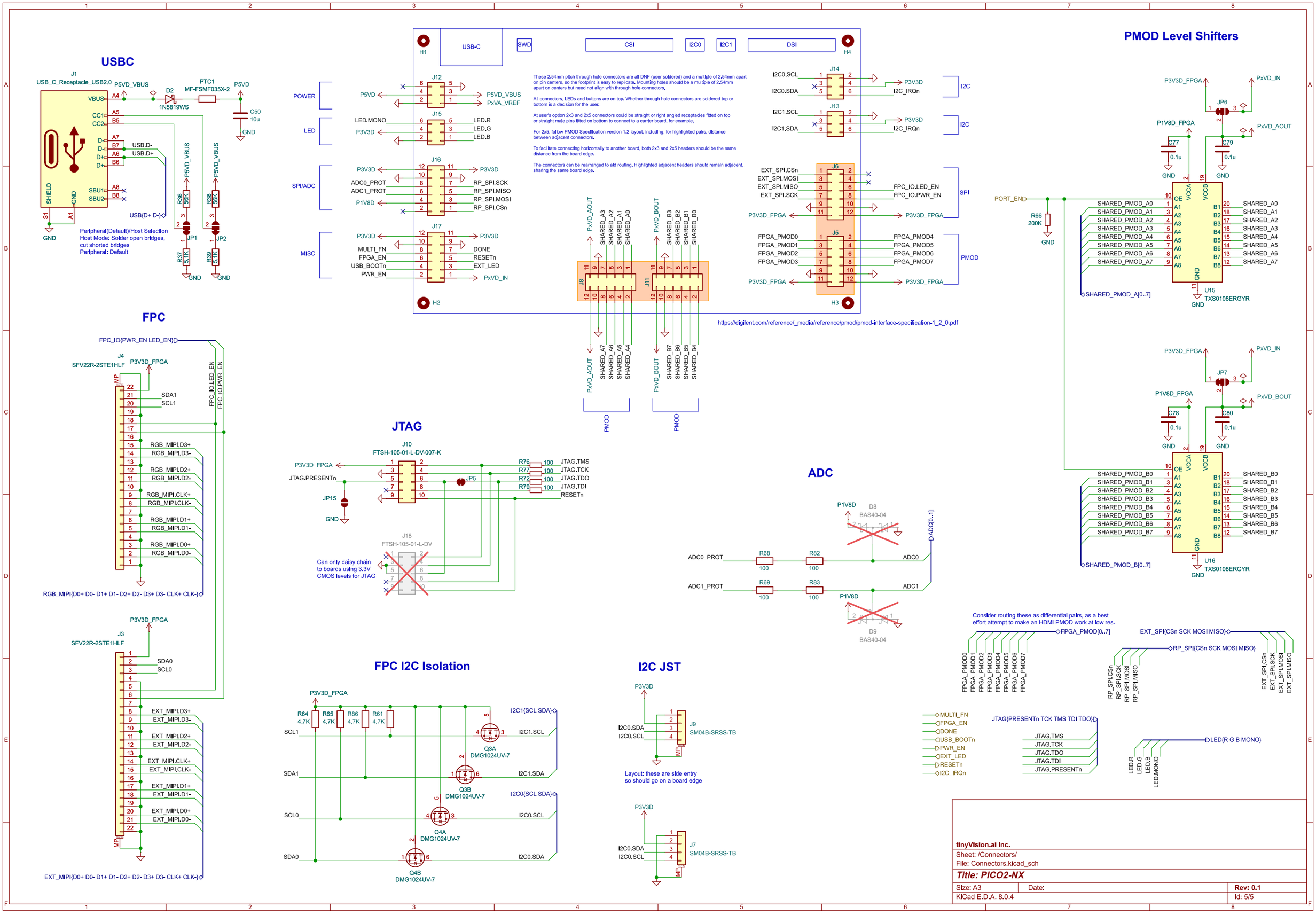
USBC
J1
USB_C_Receptacle_USB2.0
P5VD_VBUS
D2
1N5819WS
PTC1
MF-FSMF035X-2
P5VD
C50
10u
GND
VBUS
CC1
CC2
D-
D+
SHIELD
GND
SBU1
SBU2
USB.D-
USB.D+
USB(D+ D-)
R38
58K
JP1
JP2
R37
5.1K
R39
5.1K
Peripheral(Default)/Host Selection
Host Mode: Solder open bridges,
cut shorted bridges
Peripheral: Default
USB-C
SWD
CSI
I2C0
I2C1
DSI
H1
H2
H3
H4
POWER
LED
SPI/ADC
MISC
J12
J15
J16
J17
P5VD
P5VD_VBUS
PxVA_VREF
LED.MONO
P3V3D
LED.R
LED.G
LED.B
ADC0_PROT
ADC1_PROT
P1V8D
RP_SPI.SCK
RP_SPI.MISO
RP_SPI.MOSI
RP_SPI.CSn
MULTI_FN
FPGA_EN
USB_BOOTn
PWR_EN
DONE
RESETn
EXT_LED
PxVD_IN
These 2.54mm pitch through hole connectors are all DNF (user soldered) and a multiple of 2.54mm apart on pin centers, so the footprint is easy to replicate. Mounting holes should be a multiple of 2.54mm apart on centers but need not align with through hole connectors.
All connectors, LEDs and buttons are on top. Whether through hole connectors are soldered top or bottom is a decision for the user.
At user's option 2x3 and 2x5 connectors could be straight or right angled receptacles fitted on top or straight male pins fitted on bottom to connect to a carrier board, for example.
For 2x5, follow PMOD Specification version 1.2 layout, including, for highlighted pairs, distance between adjacent connectors.
To facilitate connecting horizontally to another board, both 2x3 and 2x5 headers should be the same distance from the board edge.
The connectors can be rearranged to aid routing. Highlighted adjacent headers should remain adjacent, sharing the same board edge.
https://digilent.com/reference/_media/reference/pmod/pmod-interface-specification-1_2_0.pdf
J14
J13
I2C0.SCL
I2C0.SDA
I2C1.SCL
I2C1.SDA
P3V3D
I2C_IRQn
I2C
J6
J5
EXT_SPI.CSn
EXT_SPI.MOSI
EXT_SPI.MISO
EXT_SPI.SCK
FPC_IO.LED_EN
FPC_IO.PWR_EN
P3V3D_FPGA
SPI
FPGA_PMOD0
FPGA_PMOD1
FPGA_PMOD2
FPGA_PMOD3
FPGA_PMOD4
FPGA_PMOD5
FPGA_PMOD6
FPGA_PMOD7
PMOD
J8
J11
PxVD_AOUT
PxVD_BOUT
SHARED_A0
SHARED_A1
SHARED_A2
SHARED_A3
SHARED_A4
SHARED_A5
SHARED_A6
SHARED_A7
SHARED_B0
SHARED_B1
SHARED_B2
SHARED_B3
SHARED_B4
SHARED_B5
SHARED_B6
SHARED_B7
PMOD
PMOD
PMOD Level Shifters
P3V3D_FPGA
PxVD_IN
JP6
P1V8D_FPGA
PxVD_AOUT
C77
0.1u
C79
0.1u
GND
PORT_EN
R66
200K
OE
VCCA
VCCB
U15
TXS0108ERGYR
SHARED_PMOD_A[0..7]
JP7
PxVD_BOUT
C78
0.1u
C80
0.1u
U16
TXS0108ERGYR
SHARED_PMOD_B[0..7]
FPC
FPC_IO{PWR_EN LED_EN}
J4
SFV22R-2STE1HLF
P3V3D_FPGA
FPC_IO.LED_EN
FPC_IO.PWR_EN
SDA1
SCL1
RGB_MIPI.D3+
RGB_MIPI.D3-
RGB_MIPI.D2+
RGB_MIPI.D2-
RGB_MIPI.CLK+
RGB_MIPI.CLK-
RGB_MIPI.D1+
RGB_MIPI.D1-
RGB_MIPI.D0+
RGB_MIPI.D0-
RGB_MIPI{D0+ D0- D1+ D1- D2+ D2- D3+ D3- CLK+ CLK-}
J3
SFV22R-2STE1HLF
SDA0
SCL0
EXT_MIPI.D3+
EXT_MIPI.D3-
EXT_MIPI.D2+
EXT_MIPI.D2-
EXT_MIPI.CLK+
EXT_MIPI.CLK-
EXT_MIPI.D1+
EXT_MIPI.D1-
EXT_MIPI.D0+
EXT_MIPI.D0-
EXT_MIPI{D0+ D0- D1+ D1- D2+ D2- D3+ D3- CLK+ CLK-}
JTAG
J10
FTSH-105-01-L-DV-007-K
P3V3D_FPGA
JTAG.PRESENTn
JP15
GND
JP5
R76
R77
R72
R79
100
JTAG.TMS
JTAG.TCK
JTAG.TDO
JTAG.TDI
RESETn
J18
FTSH-105-01-L-DV
Can only daisy chain
to boards using 3.3V
CMOS levels for JTAG
ADC
P1V8D
D8
BAS40-04
ADC[0..1]
ADC0_PROT
R68
R82
100
ADC0
ADC1_PROT
R69
R83
ADC1
D9
BAS40-04
Consider routing these as differential pairs, as a best
effort attempt to make an HDMI PMOD work at low res.
FPGA_PMOD[0..7]
EXT_SPI{CSn SCK MOSI MISO}
RP_SPI{CSn SCK MOSI MISO}
MULTI_FN
FPGA_EN
DONE
USB_BOOTn
PWR_EN
EXT_LED
RESETn
I2C_IRQn
JTAG{PRESENTn TCK TMS TDI TDO}
LED{R G B MONO}
FPC I2C Isolation
P3V3D_FPGA
R64
4.7K
R65
4.7K
R86
4.7K
R61
4.7K
SCL1
SDA1
SCL0
SDA0
I2C1{SCL SDA}
I2C1.SCL
I2C1.SDA
I2C0{SCL SDA}
I2C0.SCL
I2C0.SDA
Q3A
DMG1024UV-7
Q3B
DMG1024UV-7
Q4A
DMG1024UV-7
Q4B
DMG1024UV-7
I2C JST
P3V3D
J9
SM04B-SRSS-TB
I2C0.SDA
I2C0.SCL
Layout: these are side entry
so should go on a board edge
J7
SM04B-SRSS-TB
tinyVision.ai Inc.
Sheet: /Connectors/
File: Connectors.kicad_sch
Title: PICO2-NX
Size: A3
Date:
Rev: 0.1
KiCad E.D.A. 8.0.4
Id: 5/5