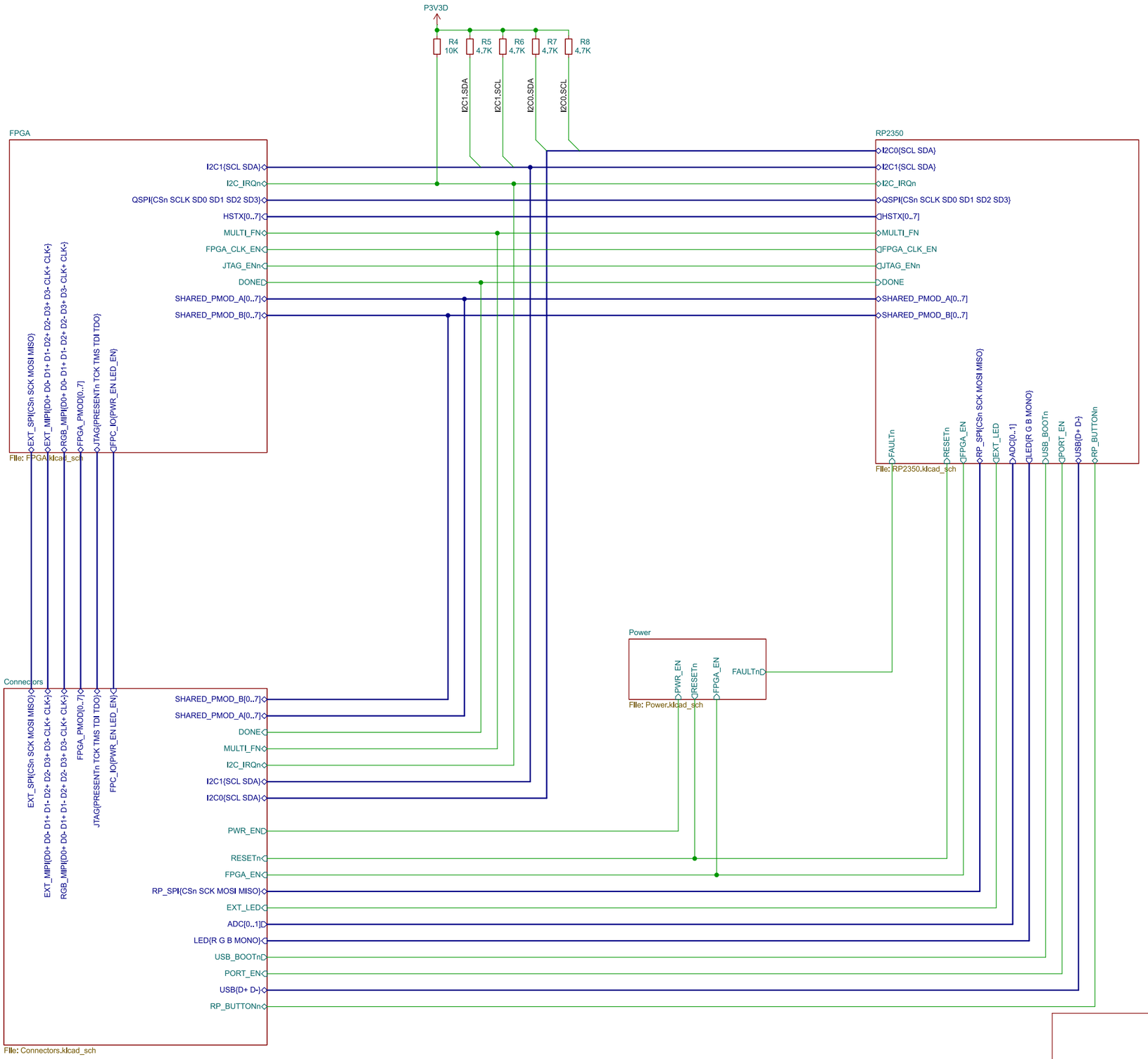

Power Diagram

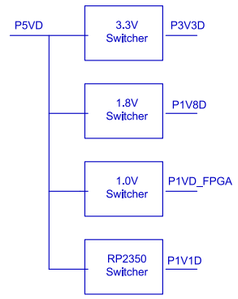

TODO:
- additional ESD protection?
- should 3.3V be a switcher or an LDO?

tinyVision.ai Inc.

Sheet: /
File: pico2-nx.kicad_sch

Title: PICO2-NX

Size: A3	Date: 2025-06-03	**Rev: 0.1**
KiCad E.D.A. 8.0.4		Id: 1/5

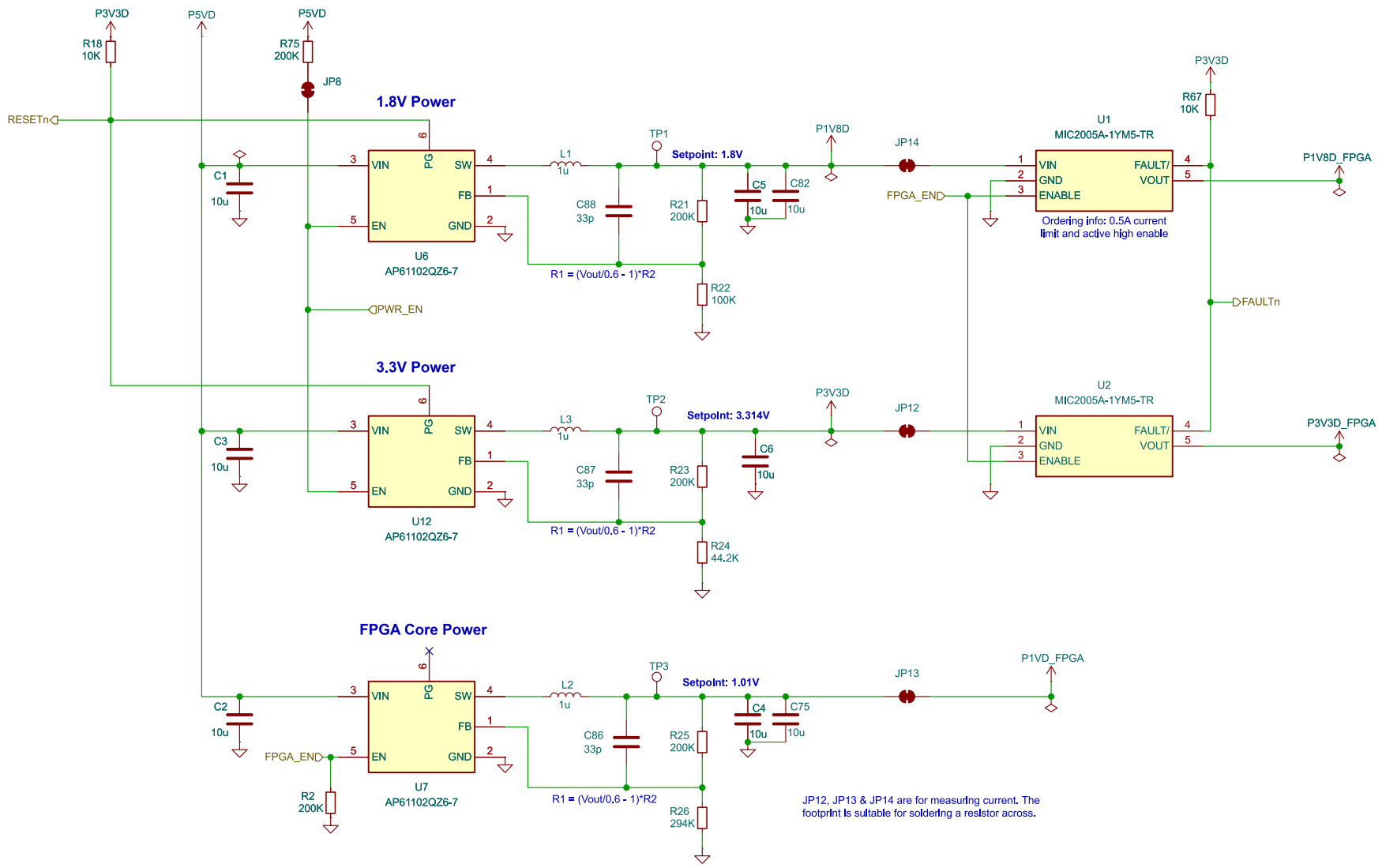

Power Modes:
OFF: EN < 0.9V, uA level current
PWM Mode: 0.91 (type) < EN < P5V-200mV
PFM Mode: P5V-200mV < EN < P5V

tinyVision.ai Inc.

Sheet: /Power/
File: Power.kicad_sch

Title: PICO2-NX

Size: A4	Date:	**Rev: 0.1**
KiCad E.D.A. 8.0.4		Id: 2/5

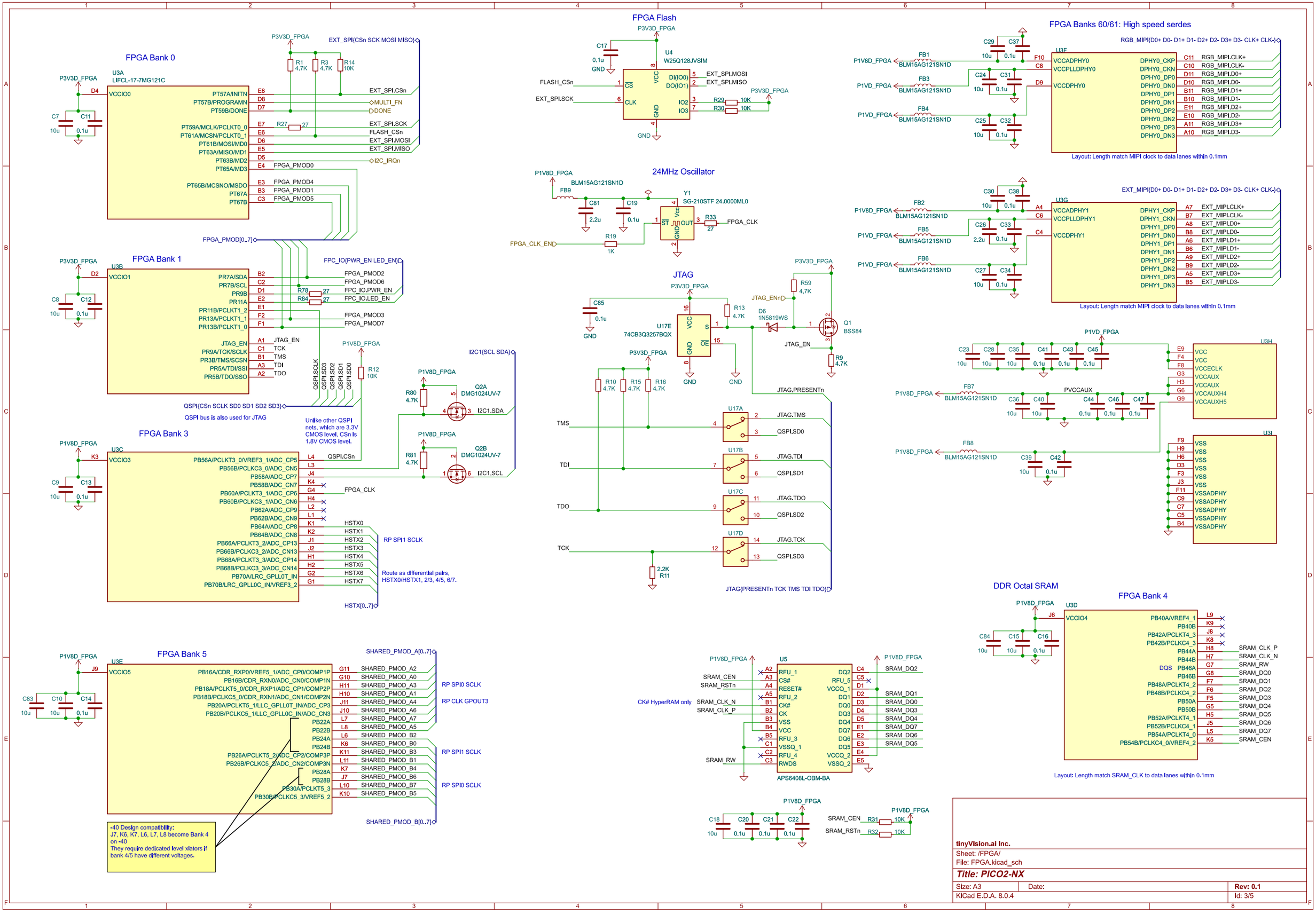
FPGA Bank 0
U3A
LIFCL-17-7MG121C
FPGA Bank 1
U3B
FPGA Bank 3
U3C
FPGA Bank 5
U3E
FPGA Flash
U4
W25Q128JVSIM
24MHz Oscillator
Y1
SG-210STF 24.0000ML0
JTAG
U17E
74CB3Q3257BQX
Q1
BSS84
Q2A
DMG1024UV-7
Q2B
DMG1024UV-7
FPGA Banks 60/61: High speed serdes
U3F
U3G
Layout: Length match MIPI clock to data lanes within 0.1mm
U3H
U3I
DDR Octal SRAM
FPGA Bank 4
U3D
U5
APS6408L-OBM-BA
CK# HyperRAM only
Unlike other QSPI nets, which are 3.3V CMOS level, CSn is 1.8V CMOS level.
QSPI bus is also used for JTAG
Route as differential pairs, HSTX0/HSTX1, 2/3, 4/5, 6/7.
-40 Design compatibility:
J7, K6, K7, L6, L7, L8 become Bank 4 on -40
They require dedicated level xlators if bank 4/5 have different voltages.
tinyVision.ai Inc.
Sheet: /FPGA/
File: FPGA.kicad_sch
Title: PICO2-NX
Size: A3
Date:
Rev: 0.1
KiCad E.D.A. 8.0.4
Id: 3/5

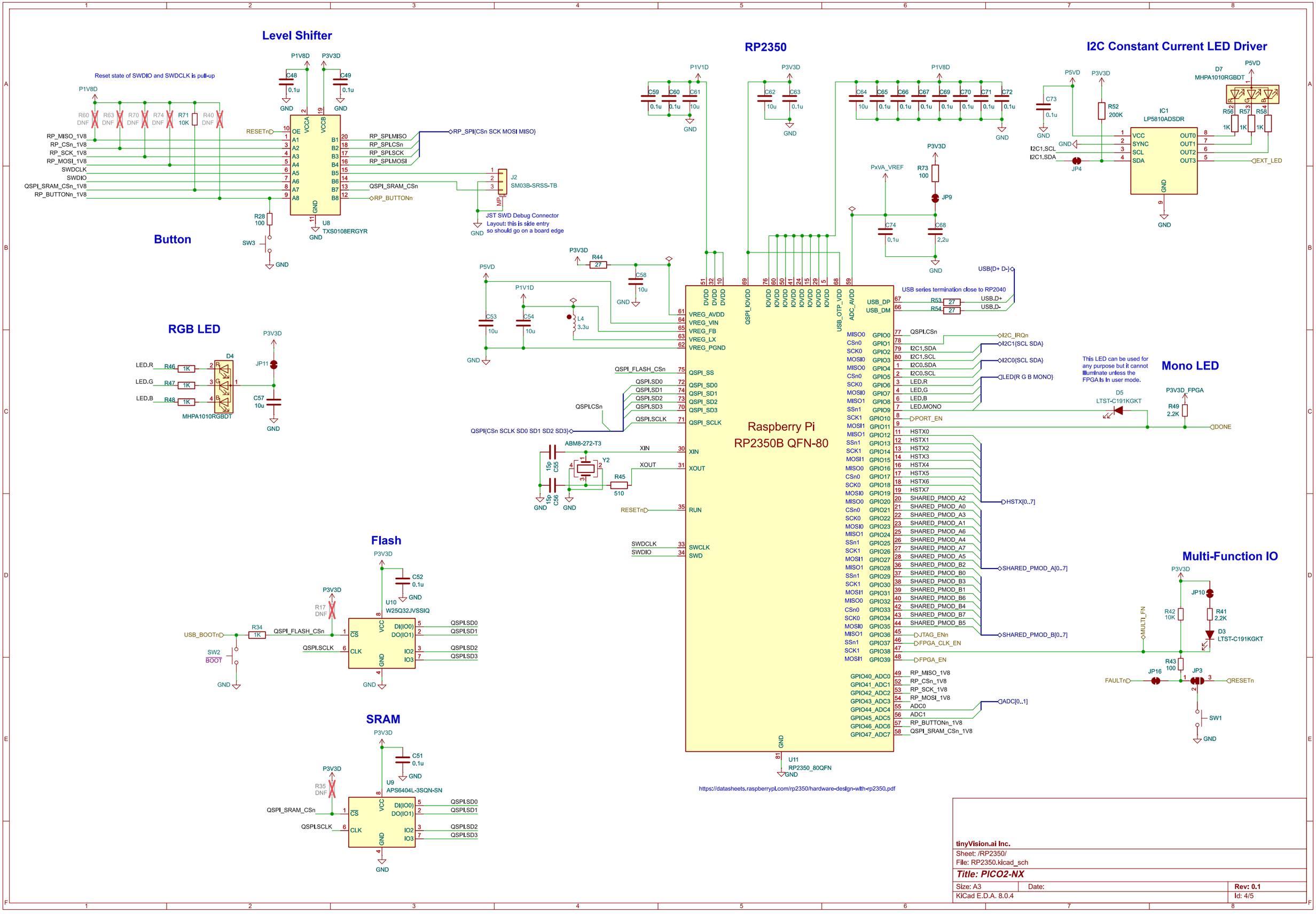
Level Shifter
Reset state of SWDIO and SWDCLK is pull-up
U8
TXS0108ERGYR
Button
SW3
JST SWD Debug Connector
Layout: this is side entry
so should go on a board edge
J2
SM03B-SRSS-TB
RP2350
Raspberry Pi
RP2350B QFN-80
U11
RP2350_80QFN
https://datasheets.raspberrypi.com/rp2350/hardware-design-with-rp2350.pdf
I2C Constant Current LED Driver
IC1
LP5810ADSDR
D7
MHPA1010RGBDT
RGB LED
D4
MHPA1010RGBDT
Mono LED
D5
LTST-C191KGKT
This LED can be used for any purpose but it cannot illuminate unless the FPGA is in user mode.
Flash
U10
W25Q32JVSSIQ
SW2
BOOT
SRAM
U9
APS6404L-3SQN-SN
Multi-Function IO
D3
LTST-C191KGKT
SW1
USB series termination close to RP2040
ABM8-272-T3
Y2
tinyVision.ai Inc.
Sheet: /RP2350/
File: RP2350.kicad_sch
Title: PICO2-NX
Size: A3
Date:
Rev: 0.1
KiCad E.D.A. 8.0.4
Id: 4/5

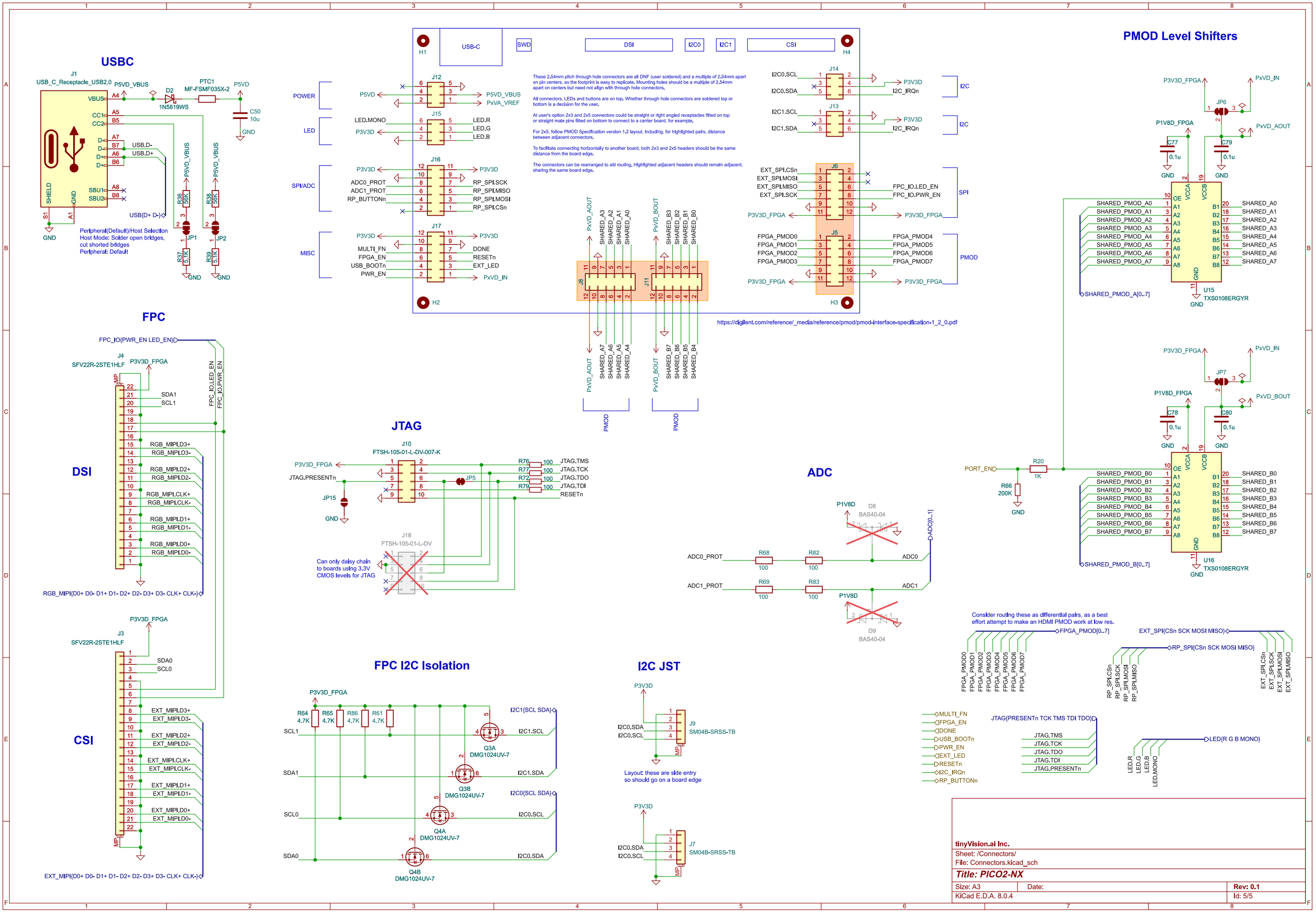

tinyVision.ai Inc.

Sheet: /Connectors/

File: Connectors.kicad_sch

Title: PICO2-NX

Size: A3	Date:	Rev: 0.1
KiCad E.D.A. 8.0.4		Id: 5/5