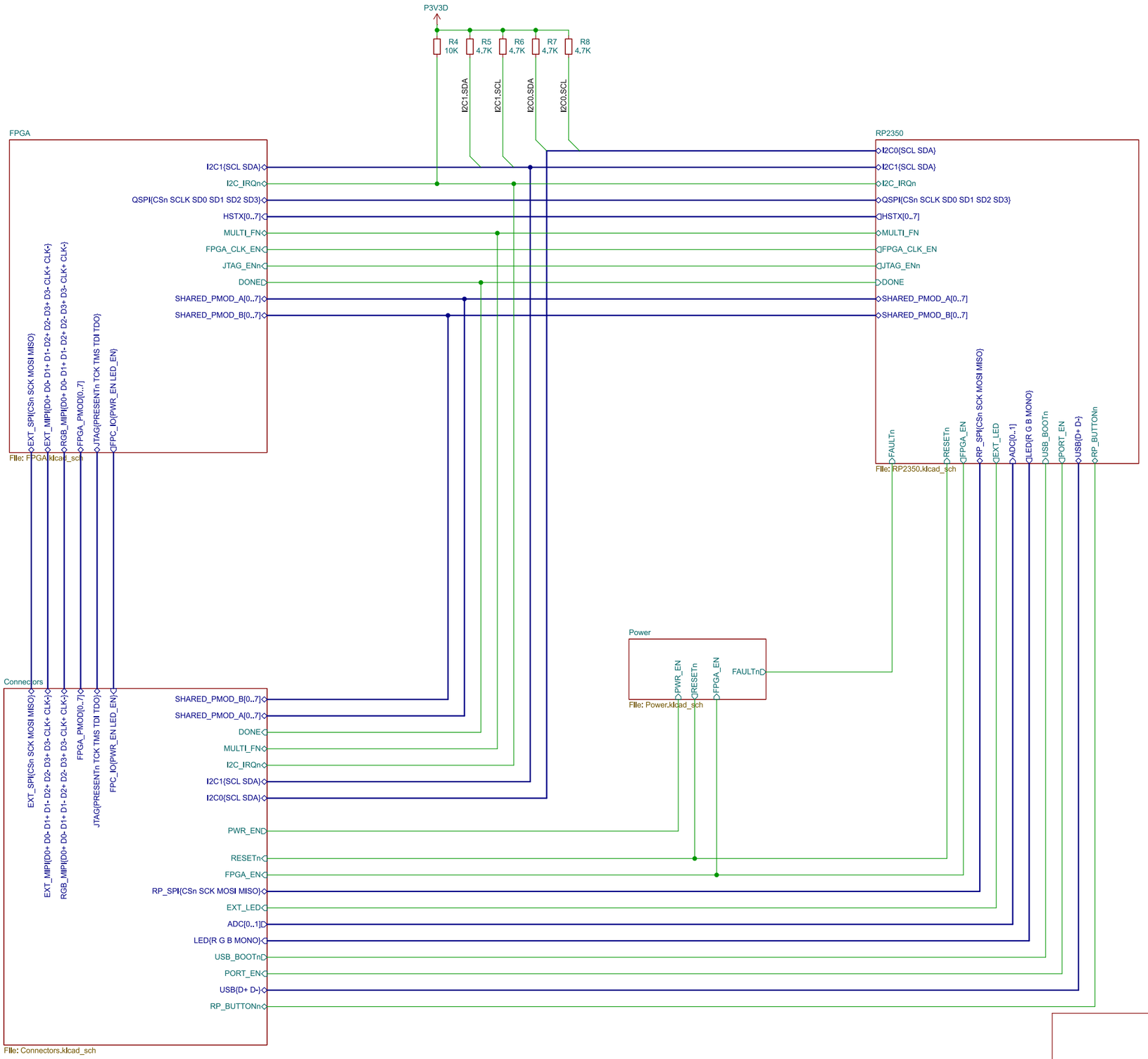

Power Diagram

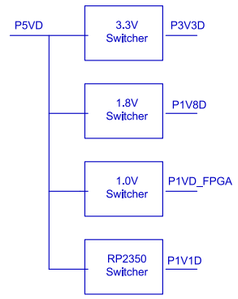

TODO:
- additional ESD protection?
- should 3.3V be a switcher or an LDO?

tinyVision.ai Inc.

Sheet: /
File: pico2-nx.kicad_sch

Title: PICO2-NX

Size: A3	Date: 2025-06-03	**Rev: 0.1**
KiCad E.D.A. 8.0.4		Id: 1/5

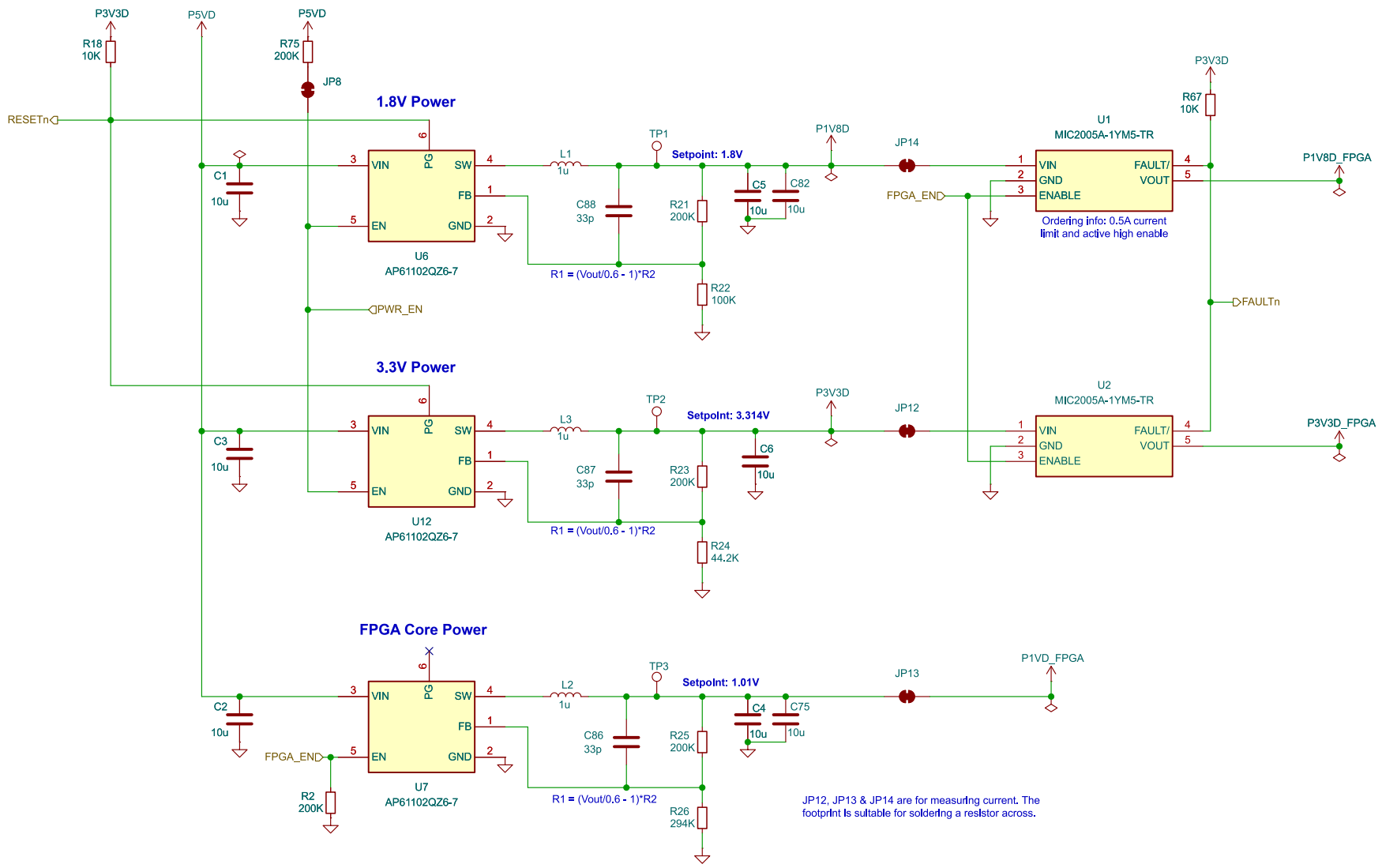

Power Modes:
OFF: EN < 0.9V, uA level current
PWM Mode: 0.91 (type) < EN < P5V-200mV
PFM Mode: P5V-200mV < EN < P5V

tinyVision.ai Inc.

Sheet: /Power/
File: Power.kicad_sch

Title: PICO2-NX

Size: A4	Date:	**Rev: 0.1**
KiCad E.D.A. 8.0.4		Id: 2/5

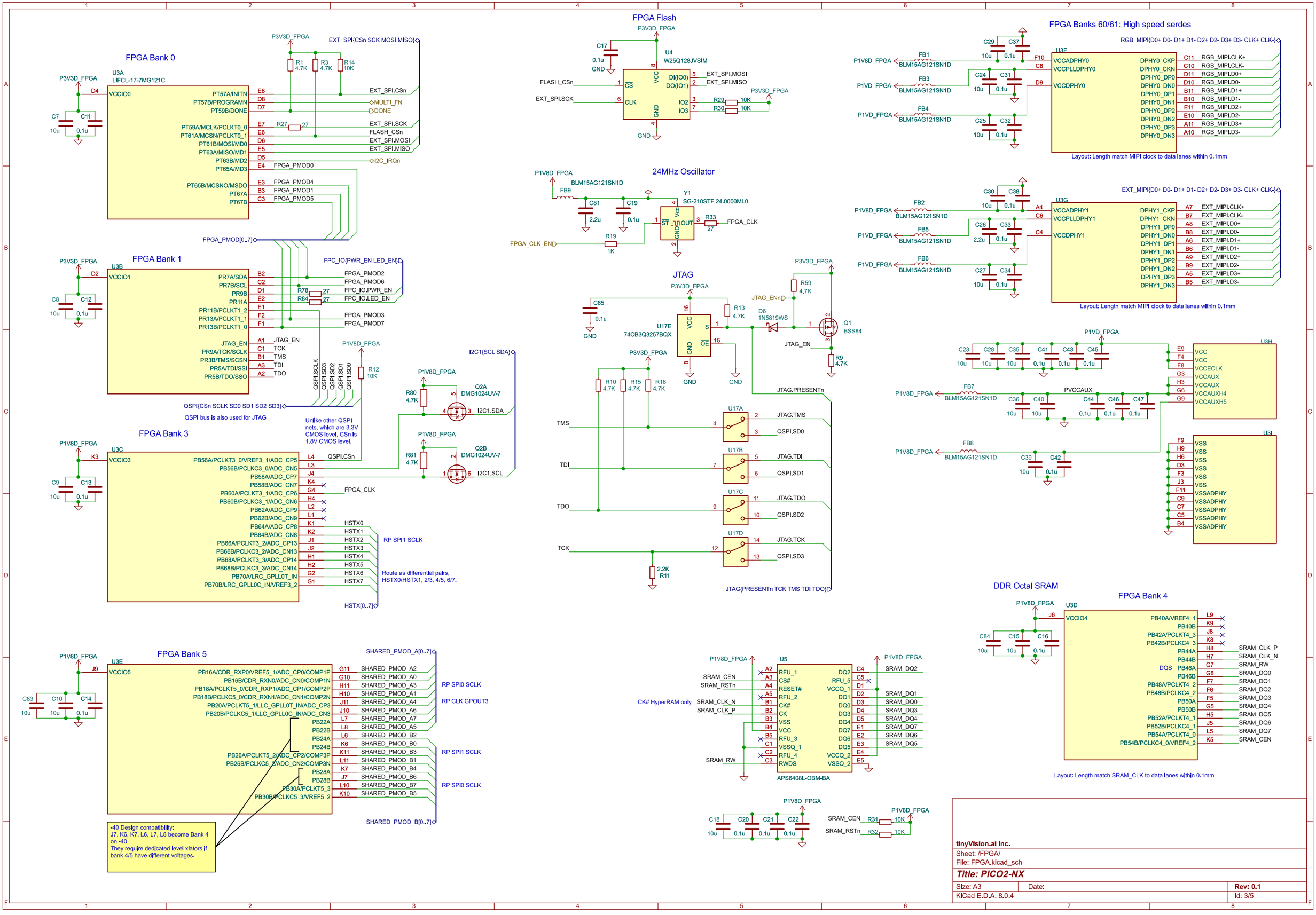
FPGA Bank 0
U3A
LIFCL-17-7MG121C
FPGA Bank 1
U3B
FPGA Bank 3
U3C
FPGA Bank 5
U3E
FPGA Flash
U4
W25Q128JVSIM
24MHz Oscillator
Y1
SG-210STF 24.0000ML0
JTAG
U17E
74CB3Q3257BQX
Q1
BSS84
Q2A
DMG1024UV-7
Q2B
DMG1024UV-7
FPGA Banks 60/61: High speed serdes
U3F
U3G
U3H
U3I
Layout: Length match MIPI clock to data lanes within 0.1mm
QSPI bus is also used for JTAG
Unlike other QSPI nets, which are 3.3V CMOS level, CSn is 1.8V CMOS level.
Route as differential pairs, HSTX0/HSTX1, 2/3, 4/5, 6/7.
-40 Design compatibility:
J7, K6, K7, L6, L7, L8 become Bank 4 on -40
They require dedicated level xlators if bank 4/5 have different voltages.
DDR Octal SRAM
FPGA Bank 4
U3D
U5
APS6408L-OBM-BA
CK# HyperRAM only
Layout: Length match SRAM_CLK to data lanes within 0.1mm
tinyVision.ai Inc.
Sheet: /FPGA/
File: FPGA.kicad_sch
Title: PICO2-NX
Size: A3
Date:
Rev: 0.1
KiCad E.D.A. 8.0.4
Id: 3/5

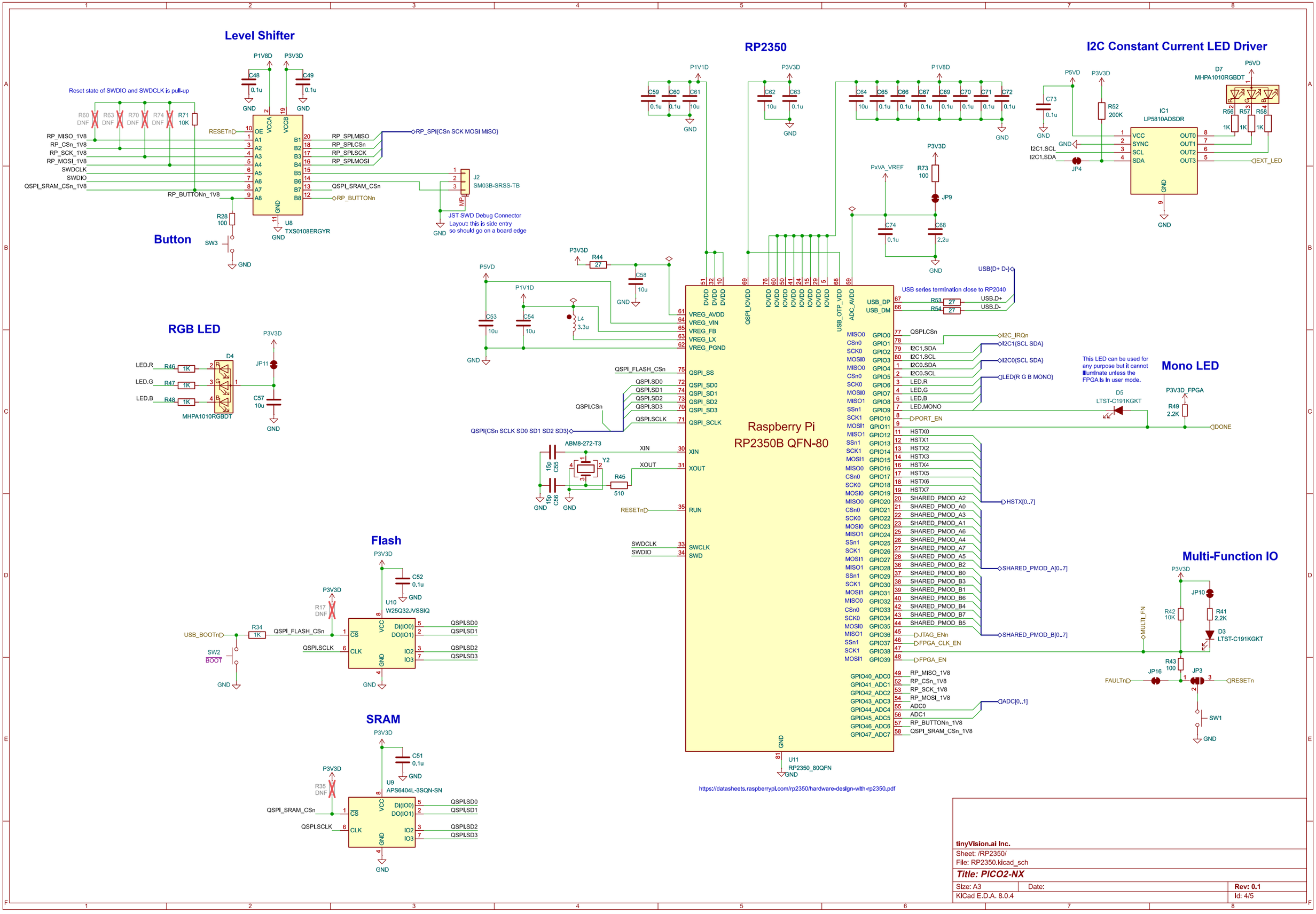
Level Shifter
Reset state of SWDIO and SWDCLK is pull-up
U8
TXS0108ERGYR
Button
RP2350
Raspberry Pi
RP2350B QFN-80
U11
RP2350_80QFN
https://datasheets.raspberrypi.com/rp2350/hardware-design-with-rp2350.pdf
I2C Constant Current LED Driver
IC1
LP5810ADSDR
D7
MHPA1010RGBDT
RGB LED
D4
MHPA1010RGBDT
Mono LED
D5
LTST-C191KGKT
This LED can be used for any purpose but it cannot illuminate unless the FPGA is in user mode.
Flash
U10
W25Q32JVSSIQ
SRAM
U9
APS6404L-3SQN-SN
Multi-Function IO
D3
LTST-C191KGKT
JST SWD Debug Connector
Layout: this is side entry so should go on a board edge
J2
SM03B-SRSS-TB
USB series termination close to RP2040
ABM8-272-T3
Y2
tinyVision.ai Inc.
Sheet: /RP2350/
File: RP2350.kicad_sch
Title: PICO2-NX
Size: A3
Date:
Rev: 0.1
KiCad E.D.A. 8.0.4
Id: 4/5

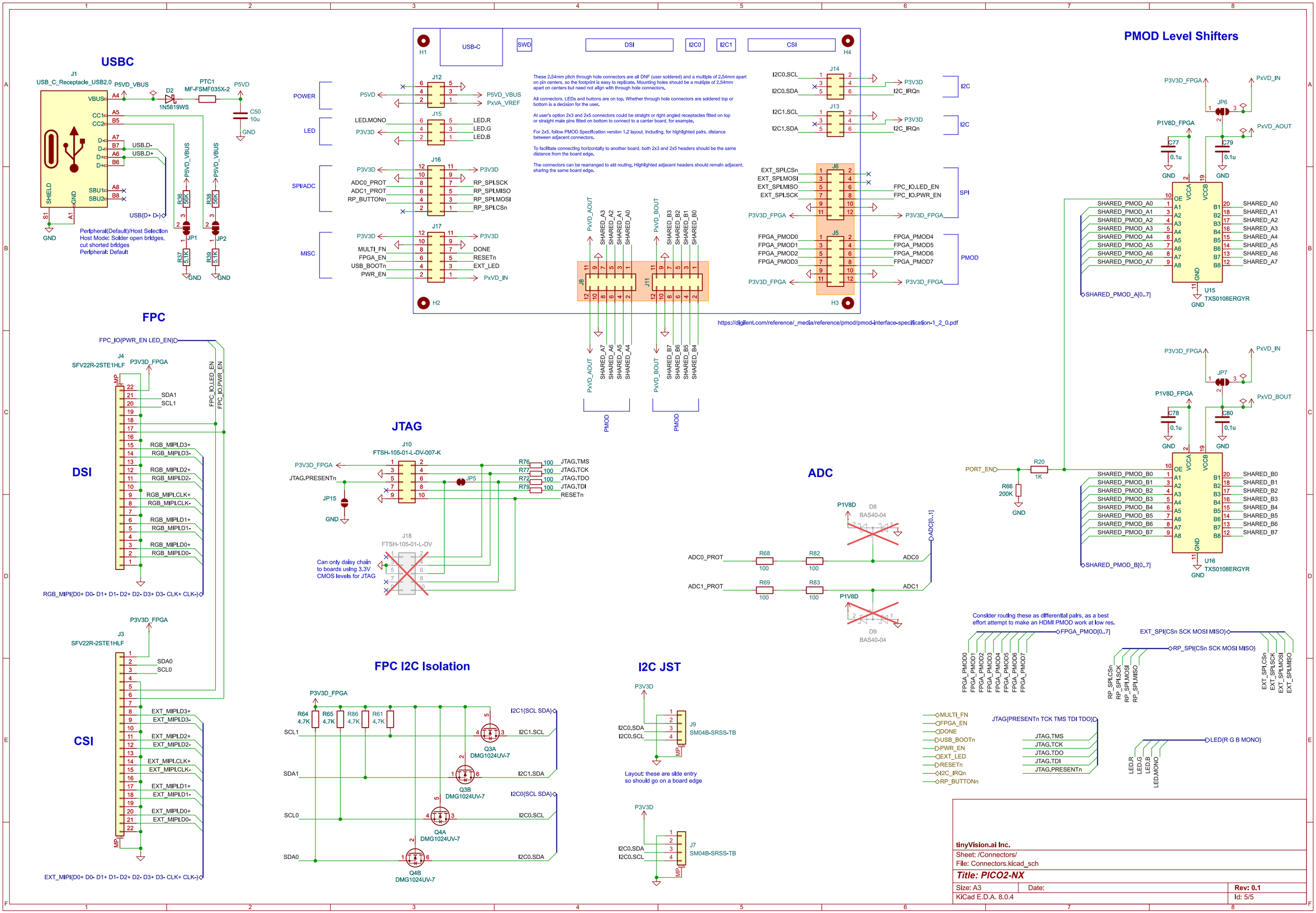

tinyVision.ai Inc.

Sheet: /Connectors/

File: Connectors.kicad_sch

Title: PICO2-NX

Size: A3	Date:	Rev: 0.1
KiCad E.D.A. 8.0.4		Id: 5/5