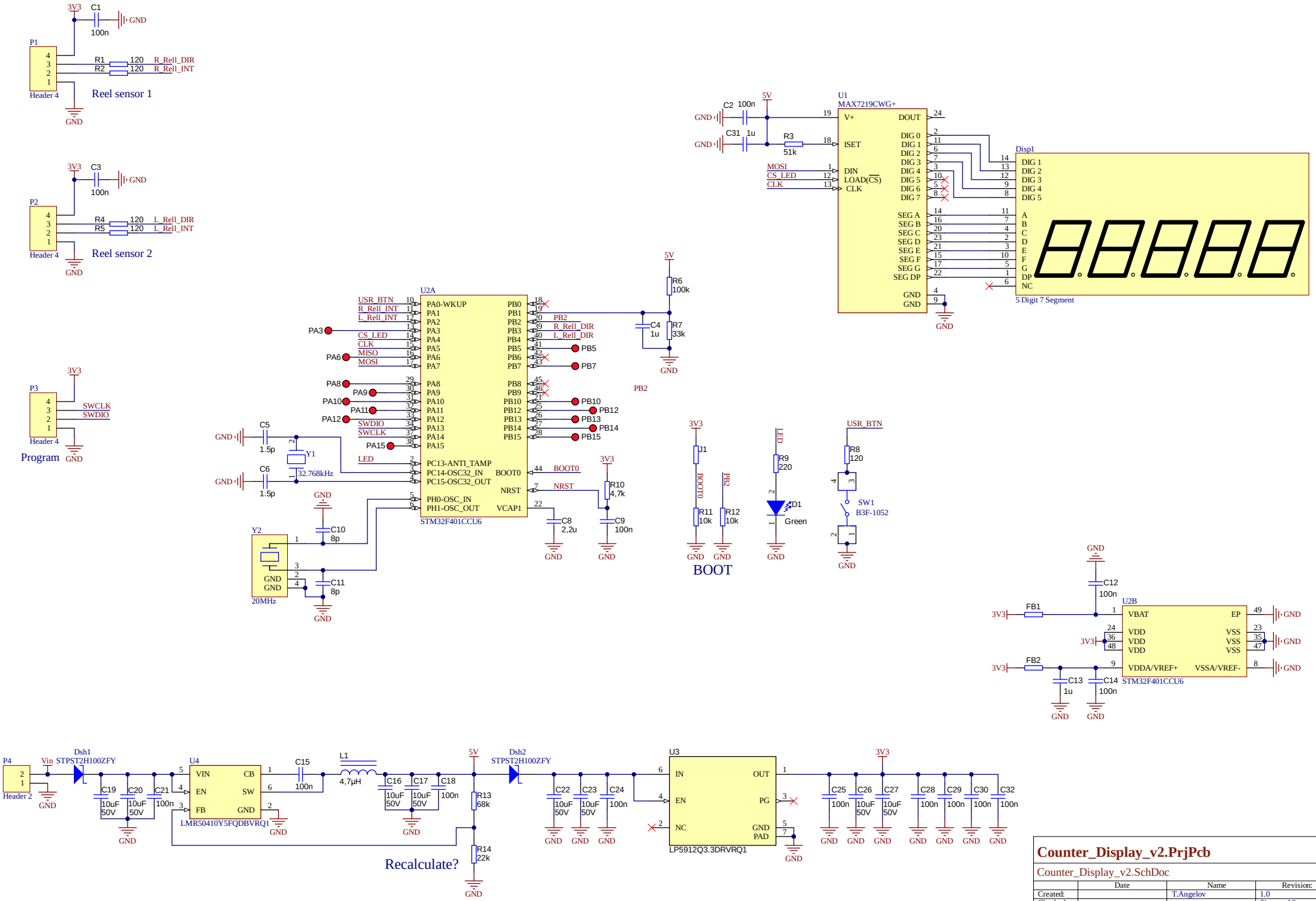

Counter_Display_v2.PrjPcb

Counter_Display_v2.SchDoc

	Date	Name	Revision:
Created:		T.Angelov	1.0
Checked			Size: A3
Released:			Sheet 1 of 1

File: Counter_Display_v2.SchDoc

HSI_No.