Liveness Analysis and Deadlock Control for Automated Manufacturing Systems With Multiple Resource Requirements

Yanxiang Feng, Keyi Xing, MengChu Zhou, *Fellow, IEEE*, and Huixia Liu

***Abstract*—This paper focuses on the liveness analysis and deadlock control for automated manufacturing systems (AMSs) with multiple resource requirements. Such an AMS is modeled by a class of generalized Petri nets called systems of simple sequential processes with multiple resources (S^3PMR). It is shown that a deadlock of the considered AMSs can be characterized by the *saturation* of a structural object in S^3PMR, called perfect resource transition-circuit (PRT-circuit). As a consequence, an S^3PMR is live if and only if no PRT-circuit is saturated at any reachable marking. To ensure the system liveness, one has to prevent all PRT-circuits from being saturated at all reachable markings. To develop a structurally simple Petri net deadlock controller, we present the concept of an effective transition cover, which is a special subset of PRT-circuits that may be saturated. Then by designing a control place with a proper control variable for each PRT-circuit in an effective transition cover, we obtain a deadlock controller for the system. The needed control variables are determined by an integer linear program. Since the number of PRT-circuits in an effective transition cover is much less than that of all PRT-circuits that need to control, our controller is of small structural size. For an AMS with saturable PRT-circuits, there exists at least a transition cover. An algorithm is presented for checking the effectiveness of transition covers, and transforming noneffective transition covers into effective ones. Finally, some examples are used to illustrate the proposed method.**

***Index Terms*—Automated manufacturing system (AMS), deadlock prevention, discrete event systems, Petri nets, resource transition-circuits, siphon.**

I. Introduction

IN AUTOMATIC manufacturing systems (AMSs), based on the prescribed production plans, different types of parts are processed in some computer-controlled machines. Due to the high degree of resource sharing, deadlock arises when a set of processes is indefinitely waiting for resources that are already held by other process in the same set, which leads to the local or global blockage and the production goal cannot be fulfilled. Thus it is significant to establish control policies for AMSs such that deadlocks never occur. Further, to avoid deadlock and effectively operate and schedule AMSs [34], it is necessary to develop proper deadlock controllers.

To deal with the deadlock problem in AMSs, researchers have mainly studied two approaches: 1) avoidance and 2) prevention. The former is an "on-line" control policy to choose some correct system evolutions, among the feasible ones, to keep the system away from deadlock states [1], [7], [15], [32]. This method is established based on the feedback information of current resource allocation statues and future process resource requirements. The latter is an "off-line" control policy to impose constraints on the interaction of resources and processes such that the occurrence of deadlock is prohibited [2], [5], [10]–[13], [16], [17], [19], [20], [23], [25], [26], [29]. In addition, for AMSs with unreliable resources, robust deadlock prevention and avoidance policies are proposed in [9], [21], [28], and [31].

Petri net is a powerful formalism to effectively simulate and analyze some features of AMSs such as concurrency, asynchrony, synchrony conflict, mutual exclusion, precedence relation, and deadlocks. Most Petri net models of AMSs are constructed around two entities: processes and resources [27]. Generally speaking, on such kind of modeling methods, we have: 1) a production plan for a type of processes is modeled by means of a strongly connected state machine and 2) a physical element composing an AMS (such as a machine, buffer, and tool) is modeled by a resource place with a given capacity. More particularly, a class of ordinary Petri net, called systems of simple sequential processes with resources (S^3PR) [4], are used extensively to model AMSs in which each process stage requires only one unit of one single resource type. While for the AMSs in which each process stage requires more than one units of one single resource type, Liu *et al.* [18] proposed a kind of generalized Petri nets, namely, simple sequential process with weighted resources allocation (WS^3PRs), to model them. Furthermore, Tricas *et al.* [25] used another generalized Petri nets, called systems of sequential systems with shared resources (S^4PRs), to model the AMSs in which each process stage requires arbitrary units of arbitrary resource types. Note that S^4PR is equivalent to S^4P.

Manuscript received July 8, 2016; revised April 4, 2017; accepted October 14, 2017. Date of publication December 25, 2017; date of current version January 15, 2020. This work was supported by the National Natural Science Foundation of China under Grant 61573278 and Grant 61304052. This paper was recommended by Associate Editor A. Trappey. *(Corresponding authors: Keyi Xing; MengChu Zhou.)*

Y. Feng and K. Xing are with the State Key Laboratory for Manufacturing Systems Engineering, and Systems Engineering Institute, Xi'an Jiaotong University, Xi'an 710049, China (e-mail: fengyxss@stu.xjtu.edu.cn; kyxing@mail.xjtu.edu.cn).

M. Zhou is with the Department of Electrical and Computer Engineering, New Jersey Institute of Technology, Newark, NJ 07102 USA, and also with the Renewable Energy Research Group, King Abdulaziz University, Jeddah 21589, Saudi Arabia (e-mail: zhou@njit.edu).

H. Liu is with the School of Information and Electrical Engineering, Ludong University, Yantai 264025, China (e-mail: huixialiu@126.com).

Digital Object Identifier 10.1109/TSMC.2017.2767902

2168-2216 © 2017 IEEE. Personal use is permitted, but republication/redistribution requires IEEE permission.
See http://www.ieee.org/publications_standards/publications/rights/index.html for more information.

Authorized licensed use limited to: Chulalongkorn University provided by UniNet. Downloaded on March 08,2026 at 05:25:48 UTC from IEEE Xplore. Restrictions apply.

Siphons and resource transition-circuits (RT-circuits) are both structural objects that can characterize deadlocks in ordinary or generalized Petri net models of AMSs. Some sufficient and perhaps not necessary liveness conditions of the system are related with them [2], [3], [5], [6], [32], [35]. More particularly, a marked S^3PR is live if and only if no strict minimal siphon (SMS) is emptied [3] or no perfect RT-circuit (PRT-circuit) is saturated [32] at any reachable marking. Liu *et al.* [18] define a circuit wait (CW) as a set of resource places that form an RT-circuit in WS^3PRs; while the proposed sufficient and necessary liveness condition related with CWs or RT-circuits for WS^3PR is shown defective via a counter-example in [30]. In addition, an S^4PR is deadlock-free if it satisfies the max controlled-siphon property (max cs-property) [2].

Numerous deadlock prevention policies for AMSs are established on the basis of the liveness characterization mentioned above. Ezpeleta *et al.* [5] proposed a prevention policy for S^3PRs by adding a control place to each SMS. Xing *et al.* [32] developed an RT-circuits-based optimal deadlock prevention controller for a class of S^3PRs. In order to reduce the structural complexity of Petri net controllers, the concept of elementary siphons and transition covers are proposed in [16] and [19], respectively. More specifically, by only adding a control place to each elementary siphon such that all SMSs are always marked in S^3PRs [16], or satisfy max cs-property in S^4PRs [17], we can guarantee the liveness of the controlled system. In [19], the concept of a transition cover is presented, which is a subset of maximal PRT-circuits in S^3PRs, and its transition set can cover the set of transitions of all maximal PRT-circuits. By designing a control place with a right control variable for each maximal PRT-circuit in an effective transition cover, we can derive a liveness-enforcing deadlock controller with small structural size. Its control variables are determined by solving an integer linear program (ILP). Alternatively, Hu and Liu [11] developed an inequality analysis-based method to significantly reduce the size of a supervisor controller for S^4PR. The work [13] further shows that such method can explain more simplification mechanisms than the elementary siphon-based method [16], and hence is more powerful to reduce the structural complexity of Petri net supervisor.

From the view point of PRT-circuits, this paper focuses on the liveness analysis and deadlock control of AMSs with multiple resource requirements. AMSs are first modeled via Petri nets called S^3PMRs, which are equivalent to WS^3PRs [18]. We start by showing that a deadlock in S^3PMRs can be characterized as a PRT-circuit that is saturated at a reachable marking. Hence an S^3PMR is live if and only if no PRT-circuit is saturated at all reachable markings. Moreover, an ILP is proposed to determine whether a PRT-circuit can be saturated at some reachable marking. Then the set of PRT-circuits that may be saturated can be computed.

To prevent deadlocks in an S^3PMR, we need to add a control place to each PRT-circuit that may be saturated; but this may lead to a structurally complicated controller since the number of PRT-circuits that may be saturated is growing exponentially with the system size in the worst case. To design a small-size Petri net deadlock controller, as just enlightened in [11], [13], [16], [17], and [19], we present the concept of a transition cover in S^3PMR, which is a subset of PRT-circuits that may be saturated, and its transition set can cover all the transitions of PRT-circuits that may be saturated. Furthermore, we define a new concept called an effective transition cover. Then by adding a control place with a proper control variable for each PRT-circuit in an effective transition cover, we obtain a deadlock prevention controller, whereas the control variables can be determined by solving an ILP. Since the number of PRT-circuits in an effective transition cover is much less than that of all PRT-circuits that need to be controlled, our Petri net controller is of small structural size.

An algorithm is presented to compute transition covers given an S^3PMR. Note that not all transition covers are effective, and hence another algorithm is given to check their effectiveness and transform noneffective ones into effective ones. It can be shown that there exists at least an effective transition cover for any S^3PMR with saturable PRT-circuits. Hence, a transition cover-based Petri net controller can be developed for such systems.

The rest of this paper is organized as follows. Section II shows the preliminaries of Petri nets and S^3PMRs used in this paper. Section III proposes the structural characteristics of deadlocks related with RT-circuits in S^3PMRs. In Section IV, the concept of an effective transition cover in S^3PR is extended to deal with S^3PMR, based on it, we develop some deadlock controllers. In Section V, the existence of effective transition covers is proved and an algorithm is presented. Section VI gives some examples to illustrate the proposed methods. Section VII concludes this paper.

II. Preliminary

Some definitions and notations about Petri nets and S^3PMRs are introduced in this section. Readers may refer to [4], [22], [24], [27], and [37]–[46] for various applications.

A. Petri Nets

A Petri net is a four-tuple $N = (P, T, F, W)$, where P and T are the set of places and transitions, respectively. $F \subseteq (P \times T) \cup (T \times P)$ is the set of arcs. $W : F \to \mathbb{Z}\backslash\{0\}$ assigns the weights to arcs, where $\mathbb{Z} = \{0, 1, 2, \dots\}$. If the weight of each arc in F is one, N is said to be *ordinary* and can be denoted as $N = (P, T, F)$ for short; otherwise, N is a *generalized* net.

Let $x \in P \cup T$. The preset of x is ${}^\bullet x = \{y \in P \cup T \mid (y, x) \in F\}$, the post set of x is $x^\bullet = \{y \in P \cup T \mid (x, y) \in F\}$. These notations can be extended to a set, i.e., if $X \subseteq P \cup T$, then ${}^\bullet X = \cup_{x \in X} {}^\bullet x$ and $X^\bullet = \cup_{x \in X} x^\bullet$. An ordinary Petri net N is called a state machine if $\forall t \in T$, $|t^\bullet| = |{}^\bullet t| = 1$.

Let $\mathbb{Z}_k = \{0, 1, 2, \dots, k\}$ for a positive integer k. A marking or state of N is a mapping $M : P \to \mathbb{Z}$. Given a place $p \in P$ and a marking M, $M(p)$ denote the number of tokens in p at M. Let $S \subseteq P$ be a set of places. $M(S)$ denotes the sum of tokens in all places of S at M, i.e., $M(S) = \sum_{p \in S} M(S)$. The *incidence matrix* of Petri net N is a $|P| \times |T|$ matrix $[N]$ such that $[N_{ij}] = [N_{ij}]^+ - [N_{ij}]^-$, where $[N_{ij}]^+ = W(t_j, p_i)$ and $[N_{ij}]^- = W(p_i, t_j)$. Let (N, M_0) denote the Petri net N with an initial marking M_0. In addition, for economy of space, a

Authorized licensed use limited to: Chulalongkorn University provided by UniNet. Downloaded on March 08,2026 at 05:25:48 UTC from IEEE Xplore. Restrictions apply.

marking M of N can be denoted by $\Sigma_{p\in P}M(p)p$, for example, marking $M = (1, 1, 2, 0, 0)^T$ is written as $M = p_1 + p_2 + 2p_3$.

A transition $t \in T$ is enabled at a marking M if $\forall p \in {}^\bullet t$, $M(p) \geq W(p, t)$, denoted by $M[t >$. An enabled transition t can fire at M, yielding a new making M', denoted by $M[t > M'$, where $M'(p) = M(p) - 1$, $\forall p \in {}^\bullet t \backslash t^\bullet$; $M'(p) = M(p) + 1$, $\forall p \in t^\bullet \backslash {}^\bullet t$; $M'(p) = M(p)$,$\forall\ p \in P - \{{}^\bullet t \backslash t^\bullet, t^\bullet \backslash {}^\bullet t\}$. A sequence of transitions $\delta = t_1 t_2 \cdots t_k$, is friable or feasible from M, if $M_i[t_i > M_{i+1}$, $i \in \mathbb{Z}_k$, hold, where $M_1 = M$ and M_i is called a reachable marking from M. Let $R(N, M_0)$ denote the set of all reachable markings from M_0. Further, $M_0[\delta > M$ implies that the state equation $M = M_0 + [N]Y$ is satisfied, where Y is a vector whose ith entry denotes the number of occurrences of t_i in δ.

A transition $t \in T$ is live if $\forall M \in R(N, M_0)$, $\exists M' \in R(N, M_0)$ such that $M'[t >$ holds. It is dead at M if there is no marking in $R(N, M)$ that enables t. (N, M_0) is live if every transition is live.

Let $N = (P, T, F, W)$ be a Petri net, and $X \subseteq P \cup T$. The subnet generated by X is a Petri net $N[X] = (P_X, T_X, F_X, W_X)$, where $P_X = X \cap P$, $T_X = X \cap T$, $F_X = F \cap (X \times X)$, and $\forall f \in F_X$, $W_X(f) = W(f)$. A route is a string $\eta = x_1 x_2 \ldots x_k$, where $x_i \in T \cup P$, $(x_i, x_{i+1}) \subseteq F$, $i \in \mathbb{Z}_{k-1}$. A path is a route whose nodes are all different except, perhaps, x_1 and x_k. A route $\eta = x_1 x_2 \ldots x_k$ is a circuit if $x_1 = x_k$.

The composition of two Petri nets, $N_i = (P_i, T_i, F_i, W_i)$, $i \in \mathbb{Z}_2$, via the same elements, denoted as $N_1 \otimes N_2$, is a Petri net $N_1 \otimes N_2 = (P, T, F, W)$, where $P = P_1 \cup P_2$, $T = T_1 \cup T_2$, $F = F_1 \cup F_2$, $W = W_1 \cup W_2$. Two marked Petri nets, $(N_i, M_{i0}) = (P_i, T_i, F_i, W_i, M_{i0})$, $i \in \mathbb{Z}_2$, are compatible if $\forall p \in P_1 \cap P_2$, $M_{10}(p) = M_{20}(p)$. The composition of two compatible marked Petri nets (N_1, M_{10}) and (N_2, M_{20}) is a marked Petri net $(N_1, M_{10}) \otimes (N_2, M_{20}) = (P, T, F, W, M_0)$, where $(P, T, F, W) = N_1 \otimes N_2$, $\forall p_1 \in P_1$, $\forall p_2 \in P_2$, $M_0(p_1) = M_{10}(p_1)$, and $M_0(p_2) = M_{20}(p_2)$.

B. S^3PMRs

This section introduces the definition of a class of Petri nets called S^3PMRs, which is equivalent to WS^3PRs [18].

Definition 1: A simple sequential process (S^2P) is an ordinary Petri net $N = (P_A \cup P_0, T, F, W)$ so that: 1) $P_A \neq \emptyset$, $P_0 = \{p_0\}$, $p \in P_A$ is called an *activity* or *operation* place, and p_0 is called a *process idle* place; 2) N is a strongly connected state machine; and 3) every cycle of N contains the place p_0.

Definition 2: An S^2P with multiple resources (S^2PMR) is a Petri net $N = (P_A \cup P_0 \cup P_R, T, F, W)$ so that: 1) the subnet generated by $P_A \cup P_0 \cup T$ is an S^2P; 2) $P_R \neq \emptyset$, $(P_A \cup P_0) \cap P_R = \emptyset$, and $r \in P_R$ is called a resource place (or resource for short); 3) $\forall p \in P_A$, $\forall t \in {}^\bullet p$, $\forall t_1 \in p^\bullet$, $\exists r \in P_R$, such that ${}^\bullet t \cap P_R = t_1^\bullet \cap P_R = \{r\}$, and $W(r, t) = W(t_1, r) > 0$; 4) $\forall r \in P_R$, ${}^{\bullet\bullet}r \cap P_A = r^{\bullet\bullet} \cap P_A \neq \emptyset$, ${}^\bullet r \cap r^\bullet = \emptyset$; and 5) ${}^{\bullet\bullet}(p_0) \cap P_R = (p_0)^{\bullet\bullet} \cap P_R = \emptyset$.

Definition 3: A system of S^2PMR, i.e., S^3PMR, is defined recursively as follows: 1) an S^2PMR is an S^3PMR and 2) let $N_i = (P_{iA} \cup P_{i0} \cup P_{iR}, T_i, F_i, W_i)$, $i \in \mathbb{Z}_2$, be two S^3PMRs so that $(P_{1A} \cup P_{10}) \cap (P_{2A} \cup P_{20}) = \emptyset$, $P_{1R} \cap P_{2R} \neq \emptyset$, $T_1 \cap T_2 = \emptyset$. Then $N = (P_A \cup P_0 \cup P_R, T, F, W) = N_1 \otimes N_2$ is an S^3PMR, where $P_A = P_{1A} \cup P_{2A}$, $P_0 = P_{10} \cup P_{20}$, $P_R = P_{1R} \cup P_{2R}$, $T = T_1 \cup T_2$, $F = F_1 \cup F_2$, and $W = W_1 \cup W_2$.

Let N be an S^3PMR and M_0 be an initial marking for N. If $\forall p_0 \in P_0$, $M_0(p_0) > 0$, $\forall p \in P_A$, $M_0(p) = 0$, and $\forall r \in P_R$, $M_0(r) \geq \max\{W(r, r^\bullet)\}$, then (N, M_0) is called an acceptably marked S^3PMR (for short, an S^3PMR).

Let $(N, M_0) = (P_A \cup P_0 \cup P_R, T, F, W, M_0)$ be an S^3PMR. For $t \in T$, let ${}^{(a)}t$ and $t^{(a)}$ denote the input and output operation place of t, respectively. Similarly, ${}^{(r)}t$ and $t^{(r)}$ denote the input and output resource places of t, respectively. For a marking $M \in R(N, M_0)$, t is *process-enabled* at M if $M({}^{(a)}t) > 0$, and t is *resource-enabled* if $M({}^{(r)}t) \geq W(r, t)$. At M, t can fire only when it is resource and process-enabled. For $r \in P_R$ and $R \subseteq P_R$, $H(r) = ({}^{\bullet\bullet}r \cap P_A) \cup (r^{\bullet\bullet} \cap P_A)$ is called a set of holders of r, and $H(R) = \cup_{r\in R}H(r)$. In addition, a transition in $P_0^\bullet$ is called *a source transition* of N.

Let $x, y \in P_A$ and $Y \subseteq P_A$. x is said to be previous to y in N if $x = y$, or there is a path in N from x to y which contains only nodes in $P_A \cup T$, this fact is denoted as $x \prec y$; otherwise, x is not previous to y, denoted as $x \not\prec y$. If there exists $y \in Y$ such that $x \prec y$, then x is previous to Y, denoted as $x \prec Y$; otherwise, x is not previous to Y, denoted as $x \not\prec Y$.

III. Structural Characteristics and Analysis of Deadlocks

In this section, a kind of structural objects, called PRT-circuits, is introduced to characterize deadlocks in S^3PMRs. Based on PRT-circuits, the sufficient and necessary liveness conditions for S^3PMRs are presented.

Definition 4: Let θ be a circuit of S^3PMR $(N, M_0) = (P_A \cup P_0 \cup P_R, T, F, W, M_0)$. θ is *resource transition-circuit* (RT-*circuit*) if it contains only transitions and resource places. Let $\Im[\theta]$ and $\Re[\theta]$ denote the sets of all transitions and resource places in θ, respectively, and $P[\theta] =^\bullet \Im[\theta] \cap P_A$. An RT-circuit θ is uniquely determined by $\Re[\theta]$ and $\Im[\theta]$. Then an RT-circuit θ is *perfect* if $P[\theta]^\bullet = \Im[\theta]$. The set of all PRT-circuits in (N, M_0) can be denoted as Θ.

Given an S^3PMR (N, M_0), for each operation place $p \in P_A$, let $\{r\} = p^{\bullet\bullet} \cap P_R$ and $W(p) = W(p^\bullet, r)$ be a weight for p. Indeed, $W(p)$ represents the number of resources r that are utilized by a token or a part in p; for any operation subset $S \subseteq P_A$, $\Sigma_{p\in S}W(p)M(p)$ indicates the number of resources occupied in S at marking $M \in R(N, M_0)$.

Definition 5: Let θ be a PRT-circuit of S^3PMR (N, M_0) and $M \in R(N, M_0)$. Then θ is said to be *saturated at M* if: 1) $\forall r \in \Re[\theta]$, $M_0(r) - \Sigma_{p\in H(r)\cap P[\theta]}W(p)M(p) < \min\{W(r, t) | t \in r^\bullet \cap \Im[\theta]\}$ and 2) $\forall p \in P[\theta]$, $M(p) > 0$.

In Definition 5, condition 1) implies that for each resource $r \in \Re[\theta]$, the number of resources r not occupied in $P[\theta]$ at M is less than the minimum weight of arcs from r to $r^\bullet \cap \Im[\theta]$; hence all transitions in $r^\bullet \cap \Im[\theta]$ are not resource-enabled at M.

Example 1: Consider S^3PMR (N, M_0) in Fig. 1, there are three PRT-circuits, i.e., $\Theta = \{\theta_1, \theta_2, \theta_3\}$, where $\theta_1 = r_1 t_7 r_2 t_2$, $\theta_2 = r_2 t_6 r_3 t_3$, and $\theta_3 = r_1 t_7 r_2 t_6 r_3 t_3 r_2 t_2$. For θ_1, we have $\Re[\theta_1] = \{r_1, r_2\}$, $\Im[\theta_1] = \{t_2, t_7\}$, and $P[\theta_1] = \{p_2, p_7\}$. Note that $M = 7p_1 + 2p_2 + 8p_5 + p_7$ is a reachable

Authorized licensed use limited to: Chulalongkorn University provided by UniNet. Downloaded on March 08,2026 at 05:25:48 UTC from IEEE Xplore. Restrictions apply.

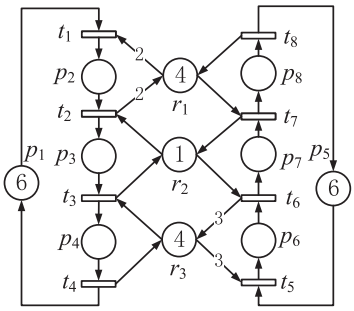

Fig. 1. Example of S^3PMR (N, M_0).

marking of (N, M_0). Since $M(p_2) > 0$, $M(p_7) > 0$, $M_0(r_1) - \Sigma_{p\in H(r1)\cap P[\theta 1]}W(p)M(p) = 0 < \min\{W(r_1, t)|t \in r_1^\bullet \cap \Im[\theta_1]\} = 1$, and $M_0(r_2) - \Sigma_{p\in H(r2)\cap P[\theta 1]}W(p)M(p) = 0 < \min\{W(r_2, t)|t \in r_2^\bullet \cap \Im[\theta_1]\} = 1$, θ_1 is saturated at M. Moreover, it can be checked that t_2 and t_7 are dead at M.

The following lemma states that all transitions of a saturated PRT-circuit are dead.

Lemma 1: Let (N, M_0) be an S^3PMR and $\theta \in \Theta$ be a saturated PRT-circuit at marking $M \in R(N, M_0)$. Then all transitions in $\Im[\theta]$ are dead at M.

Proof: Let $t \in \Im[\theta]$ and $r =^{(r)} t$, then $r \in \Re[\theta]$. Since θ is saturated at M, $W(r, t) - \min\{W(r, t_1)|t_1 \in r^\bullet \cap \Im[\theta]\} > M_0(r) - \Sigma_{p\in H(r)\cap P[\theta]}W(p)M(p)$. That is, $W(r, t) > M_0(r) - \Sigma_{p\in H(r)\cap P[\theta]}W(p)M(p)$. This implies that t is not resource-enabled even if all resources r, which are not occupied in $P[\theta]$ at M, become available. Hence in order to fire t, some resources r occupied in $P[\theta]$ need to be released. Without loss of generality, we can state that, fire any transition in $\Im[\theta]$ requires releasing some resources occupied in $P[\theta]$. However, due to the perfectness of θ, $(P[\theta])^\bullet = \Im[\theta]$, the resource release from $P[\theta]$ needs to fire transitions in $\Im[\theta]$. Thus, all transitions in $\Im[\theta]$ will never be resource-enabled, i.e., they are dead at M. ■

For $M \in R(N, M_0)$, let $D(N, M)$ denote the set of process-enabled but dead transitions in $T\backslash P_0^\bullet$ at M. Then the following lemma is obtained.

Lemma 2: Let (N, M_0) be an S^3PMR and $M \in R(N, M_0)$. If $D(N, M) \neq \emptyset$, then there exists at least a PRT-circuit θ saturated at M.

Proof: Let $t_1 \in D(N, M)$ and $r_1 =^{(r)} t_1$. Then t_1 is process but not resource-enabled at M, i.e., $M(^{(a)}t_1) > 0$ and $M(r_1) < W(r_1, t_1)$. Let $K(r_1) = \{p \in H(r_1)|M(p) > 0\}$ and $K^*(r_1) = \{p \in K(r_1)|p^\bullet \in D(N, M)\}$. Clearly, $K(r_1) \neq \emptyset$ and $K^*(r_1)^\bullet \subseteq D(N, M)$. Then we have $K^*(r_1) \neq \emptyset$, since otherwise if $K(r_1)^\bullet \cap D(N, M) = \emptyset$, all resources r occupied in $K(r_1)$ could be released, and further t_1 would be resource-enabled, leading to a contradiction. In addition, it is necessary to require that t_1 is not resource-enabled even if all resources r occupied in $K(r_1)\backslash K^*(r_1)$ become available. Hence $M(r_1) + \Sigma_{p\in K(r1)\backslash K^*(r1)}W(p)M(p) < W(r_1, t_1)$.

For each transition $t_2 \in K^*(r_1)^\bullet$, let $r_2 =^{(r)} t_2$, then $r_1 \neq r_2$. Since $t_2 \in D(N, M)$, similar to the above analysis to t_1, we have $K(r_2) \neq \emptyset$ and $K(r_2)$ can be partitioned into two subsets: $K^*(r_2)$ and $K(r_2)\backslash K^*(r_2)$, such that $K^*(r_2) \neq \emptyset$, $K^*(r_2)^\bullet \subseteq D(N, M)$, and $M(r_2) + \Sigma_{p\in K(r2)\backslash K^*(r2)}W(p)M(p) < W(r_2, t_2)$.

Repeating the aforementioned process, we obtain a sequence of resources $r_1, r_2, \ldots$ By the finiteness of the resource set P_R, the sequence is repeated for finite times. Take only the repeated part, for example, $r_1, r_2, \ldots, r_k$, let $R_1 = \{r_1, r_2, \ldots, r_k\}$ and $T_1 = \cup_{r\in R_1}K^*(r)^\bullet$. We have

$$M\left(^{(a)}t\right) > 0,\ \forall t \in T_1. \tag{1}$$

Let $r \in R_1$. For each $t \in r^\bullet \cap T_1$, $t \in D(N, M)$ and $M(r) + \Sigma_{p\in K(r)\backslash K^*(r)}W(p)M(p) < W(r, t)$. Thus

$$M(r) + \Sigma_{p\in K(r)\backslash K^*(r)}W(p)M(p) < \min\left\{W(r, t)\middle|t \in r^\bullet \cap T_1\right\}, \forall r \in R_1. \tag{2}$$

Meanwhile, since $M(r) + \Sigma_{p\in K(r)\backslash K^*(r)}W(p)M(p) = M_0(r) - \Sigma_{p\in K^*(r)}W(p)M(p)$. Thus (2) can be rewritten as

$$M_0(r) - \Sigma_{p\in K^*(r)}W(p)M(p) < \min\left\{W(r, t)\middle|t \in r^\bullet \cap T_1\right\}, \forall r \in R_1. \tag{3}$$

In addition, since $K^*(r) = H(r) \cap^\bullet T_1$, (3) can be rewritten as

$$M_0(r) - \Sigma_{p\in H(r)\cap^\bullet T_1}W(p)M(p) < \min\left\{W(r, t)\middle|t \in r^\bullet \cap T_1\right\}, \forall r \in R_1. \tag{4}$$

Let $N[R_1 \cup T_1]$ be the subnet of S^3PMR generated by $R_1 \cup T_1$. If $N[R_1 \cup T_1]$ is strongly connected, then it is a PRT-circuit θ such that $\Re[\theta] = R_1$, $\Im[\theta] = T_1$, and $P[\theta] =^\bullet T_1$. By (1) and (4), θ is saturated at M. Otherwise, $N[R_1 \cup T_1]$ consists of some strongly connected subsets and some directed paths between them. Then, there must exist, at least, a strongly connected subnet, denoted as N', such that from N' to any other strongly connected subnets, there exist no directed paths. Hence, N' is a PRT-circuit θ' such that $\Re[\theta'] = R_1$, $\Im[\theta'] \subseteq T_1$, and $P[\theta'] \subseteq^\bullet T_1$. From (1) and (4), θ' is saturated at M. Thus, there exists a saturated PRT-circuit at M. ■

Further, a sufficient and necessary condition for the liveness of S^3PMR is obtained from Lemmas 1 and 2.

Theorem 1: An S^3PMR (N, M_0) is live if and only if no PRT-circuit in Θ is saturated at any reachable marking of (N, M_0).

Note that not all PRT-circuits in Θ can be saturated. For example, consider the PRT-circuit $\theta_2 = r_2t_6r_3t_3$ in (N, M_0) shown in Fig. 1. We have $\Re[\theta_2] = \{r_2, r_3\}$, $\Im[\theta_2] = \{t_3, t_6\}$, and $P[\theta_2] = \{p_3, p_6\}$. It can be checked that θ_2 cannot be saturated at any reachable marking of (N, M_0).

Let $Q(N, M_0) = \{M|M = M_0 + [N]Y, M \geq 0, Y \geq 0\}$ be the set of markings satisfying the state equation of (N, M_0). Clearly, $R(N, M_0) \subseteq Q(N, M_0)$. Given a PRT-circuit $\theta \in \Theta$ and a marking $M \in Q(N, M_0)$, two binary indicators are introduced for $r \in \Re[\theta]$ and $p \in P[\theta]$, respectively, as follows:

$$a(r) = 1 \text{ if } M_0(r) - \Sigma_{p\in H(r)\cap P[\theta]}W(p)M(p) < \min\left\{W(r, t)\middle|t \in r^\bullet \cap \Im[\theta]\right\}; \text{otherwise, } a(r) = 0$$
$$b(p) = 1 \text{ if } M(p) > 0; \text{otherwise, } b(p) = 0.$$

Authorized licensed use limited to: Chulalongkorn University provided by UniNet. Downloaded on March 08,2026 at 05:25:48 UTC from IEEE Xplore. Restrictions apply.

Then an ILP is presented to determine whether or not a PRT-circuit $\theta \in \Theta$ can be saturated at some marking in $Q(N, M_0)$

$$\text{ILP1: } G(\theta) = \max\left\{\Sigma_{r\in\Re[\theta]}a(r) + \Sigma_{p\in P[\theta]}b(p)\right\} \tag{5}$$

$$\text{s.t. } M_0(r) - \Sigma_{p\in H(r)\cap P[\theta]}W(p)M(p) < Z(1-a(r)) + \min\left\{W(r,t)\middle|t \in r^\bullet \cap \Im[\theta]\right\}, \forall r \in \Re[\theta] \tag{6}$$

$$M(p) > Z(b(p)-1), \forall p \in P[\theta] \tag{7}$$

$$M \in Q(N, M_0) \tag{8}$$

$$a(r) \in \{0,1\};\ b(p) \in \{0,1\} \tag{9}$$

where Z is a sufficiently large positive integer.

Note that if $a(r) = 0$, then (6) obviously holds; otherwise, $a(r) = 1$, and (6) implies that $M_0(r) - \Sigma_{p\in H(r)\cap P[\theta]}W(p)M(p) < \min\{W(r,t)|t \in r^\bullet \cap \Im[\theta]\}$. Similarly, (7) holds if $b(p) = 0$, and $b(p) = 1$ implies $M(p) > 0$. Finally, the objective function $G(\theta)$ is the maximization of sums of all $a(r)$ and $b(p)$. Clearly, $G(\theta) \le |\Re[\theta]| + |P[\theta]|$.

Indeed, in the case that $G(\theta) = |\Re[\theta]| + |P[\theta]|$, i.e., all $a(r)$ and $b(p)$ equal to 1, there exists a marking $M \in Q(N, M_0)$ at which the conditions 1) and 2) in Definition 5 are met, and hence θ is saturated at M. On the contrary, if $G(\theta) < |\Re[\theta]| + |P[\theta]|$, then θ cannot be saturated at any marking in $Q(N, M_0)$. Since $\mathrm{R}(N, M_0) \subseteq Q(N, M_0)$, we obtain the following lemma.

Lemma 3: Let (N, M_0) be an S^{3}PMR and $\theta \in \Theta$. Only if $G(\theta) = |\Re[\theta]|+|P[\theta]|$, then θ may be saturated at some reachable marking of (N, M_0); while if $G(\theta) < |\Re[\theta]|+|P[\theta]|$, then θ must not be saturated at any reachable marking of (N, M_0).

For an S^{3}PMR (N, M_0), let $\Xi = \{\theta \in \Theta | G(\theta) = |\Re[\theta]| + |P[\theta]|\}$ be the set of saturable PRT-circuits and $\Theta\backslash\Xi = \{\theta \in \Theta | G(\theta) < |\Re[\theta]| + |P[\theta]|\}$ be the set of unsaturable PRT-circuits. Then Theorem 1 can be improved.

Theorem 2: An S^{3}PMR (N, M_0) is live if and only if no PRT-circuit in Ξ is saturated at any reachable marking of (N, M_0).

Since only PRT-circuits in Ξ may be saturated and lead to deadlocks in an S^{3}PMR (N, M_0), we are only concerned with PRT-circuits in Ξ in designing deadlock controllers for (N, M_0).

In order to prevent each PRT-circuit $\theta \in \Xi$ from being saturated and leading to deadlock, the minimum number of resources occupied in $P[\theta]$ in θ's saturated states should be needed in designing a deadlock controller, and it can be computed through the following LIP:

$$\text{ILP2}: X(\theta) = \min\left\{\Sigma_{p\in P[\theta]}W(p)M(p)\right\} \tag{10}$$

$$\text{s.t. } M \in Q(N, M_0)$$

$$M_0(r) - \Sigma_{p\in H(r)\cap P[\theta]}W(p)M(p) < \min\left\{W(r,t)\middle|t \in r^\bullet \cap \Im[\theta]\right\}, \forall r \in \Re[\theta] \tag{11}$$

$$M(p) > 0, \forall p \in P[\theta]. \tag{12}$$

In ILP2, constraints in (11) and (12) together imply that θ is saturated at M. The objective is to minimize the number of resources occupied in $P[\theta]$. That is, $X(\theta) = \min\{\Sigma_{p\in P[\theta]}W(p)M(p)|M \in Q(N, M_0)$ and θ is saturated at $M\}$.

Comment 1: Note that $P[\theta]$ contains at least two places, and by Definition 5, every place in $P[\theta]$ is marked when θ is saturated at marking $M \in Q(N, M_0)$, that is, $\forall p \in P[\theta]$, $M(p) \ge 1$. As a consequence, we have $X(\theta) > \max\{W(p)|p \in P[\theta]\}$.

Lemma 4: Let (N, M_0) be an S^{3}PMR, $M \in R(N, M_0)$, and $\theta \in \Xi$. If $\Sigma_{p\in P[\theta]}W(p)M(p) < X(\theta)$, then θ is not saturated at M.

Proof: We assume, by contrast, that θ is saturated at M. Since M belongs to $Q(N, M_0)$, $\Sigma_{p\in P[\theta]}W(p)M(p) \ge X(\theta)$ by ILP2. This leads to a contradiction. Hence, θ is not saturated at M. ■

From Theorem 2 and Lemma 4, in order to ensure the liveness of S^{3}PMR (N, M_0), for each $\theta \in \Xi$, the number of resources occupied in $P[\theta]$ should be limited to be less than $X(\theta)$. To do this, one method is to add a corresponding control place with a proper initial marking to each PRT-circuit in Ξ. But such method may lead to too many control places since the number of PRT-circuits in Ξ grows exponentially with the system size in the worst case. To design a simpler deadlock controller, the concept of a transition cover in [15] is extended and applied to S^{3}PMRs in this paper.

IV. Transition Cover-Based Live Deadlock Controllers

This section first extends the concept of an effective transition cover of S^{3}PRs in [15] to S^{3}PMRs, and then presents deadlock prevention controllers for these S^{3}PMRs with saturable PRT-circuits.

Definition 6: Let (N, M_0) be an S^{3}PMR, $\theta \in \Xi$, and $\Gamma(\theta) \subseteq \Xi$. $\Gamma(\theta)$ is a *transition cover* of θ or $\Gamma(\theta)$ covers θ if $\Im[\theta] \subseteq \cup_{\upsilon\in\Gamma(\theta)}\Im[\upsilon]$. $\Gamma(\theta)$ is *minimal* if any proper subset of $\Gamma(\theta)$ does not cover θ. Further, let $\Gamma \subseteq \Xi$, Γ is called a *transition cover* of (N, M_0) if $\forall\alpha \in \Xi$, $\Im[\alpha] \subseteq \cup_{\upsilon\in\Gamma}\Im[\upsilon]$.

For $\theta \in \Xi$, let $\Delta_\theta = \{p \in P_A | p \prec P[\theta]\}$ and $A_\theta = \Delta_\theta\backslash P[\theta]$. Given a transition cover Γ of (N, M_0), let $\Gamma(\alpha) \subseteq \Gamma$ be a minimal transition cover of $\alpha \in \Xi\backslash\Gamma$, we define $A_{\Gamma(\alpha)} = \cup_{\theta\in\Gamma(\alpha)}A_\theta$, $B_{\Gamma(\alpha)} = A_{\Gamma(\alpha)} \cap P[\alpha]$, and $k_{\Gamma(\alpha)} = |B_{\Gamma(\alpha)}|$.

Definition 7: Let $\Gamma(\theta) \subseteq \Xi$ be a transition cover of $\theta \in \Xi$. $\Gamma(\theta)$ is *effective* for θ if $\Gamma(\theta) \ne \emptyset$ and $X(\theta) > \Sigma_{\upsilon\in\Gamma(\theta)}\max\{W(p)|p \in P[\upsilon]\}$. A transition cover of (N, M_0), Γ, is effective if $\forall\alpha \in \Xi\backslash\Gamma$, there exists a subset $\Gamma(\alpha) \subseteq \Gamma$ that is an effective transition cover of α.

By Definition 7, any effective transition cover Γ of S^{3}PMR (N, M_0) is nonempty, and there exists an effective transition cover $\Gamma(\alpha) \subseteq \Gamma$ for each $\alpha \in \Xi\backslash\Gamma$. Hence, when an effective transitions cover, Γ, of (N, M_0) is mentioned in the sequel, we assume that an effective transition cover in Γ for each PRT-circuits of $\Xi\backslash\Gamma$ is also given. That is, a set $\Pi(\Gamma) = \{\Gamma(\alpha)|\Gamma(\alpha) \subseteq \Gamma$ is an effective transition cover for each $\alpha \in \Xi\backslash\Gamma\}$, is given.

Given an S^{3}PMR (N, M_0), if the weight of each arc is one, (N, M_0) is an S^{3}PR, and then we have $\Theta = \Xi$ and $X(\theta) = M_0(\Re[\theta])$, $\forall\theta \in \Xi$. Further, an effective transition cover Γ of (N, M_0) implies that $\forall\alpha \in \Xi\backslash\Gamma$, $M_0(\Re[\alpha]) = X(\alpha) > \Sigma_{\upsilon\in\Gamma(\alpha)}\max\{W(p)|p \in P[\upsilon]\} = |\Gamma(\alpha)|$, where $\Gamma(\alpha) \in \Pi(\Gamma)$. That is exactly identical to the effective transition cover of S^{3}PRs in [19]. Hence, we have extended the concept of an effective transition cover of S^{3}PRs in [19] to S^{3}PMRs.

Authorized licensed use limited to: Chulalongkorn University provided by UniNet. Downloaded on March 08,2026 at 05:25:48 UTC from IEEE Xplore. Restrictions apply.

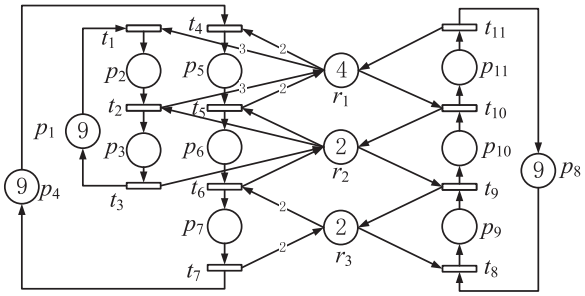

Fig. 2. Example of S^{3}PMR (N, M_0).

TABLE I
DETAILS OF ALL PRT-CIRCUITS OF (N, M_0) IN FIG. 2

θ	$\Re[\theta]$	$\Im[\theta]$	$G(\theta)$	$\theta \in \Xi$?	$X(\theta)$
θ_1	r_1, r_2	t_2, t_{10}	3	N	–
θ_2	r_1, r_2	t_5, t_{10}	4	Y	6
θ_3	r_1, r_2	t_2, t_5, t_{10}	4	N	–
θ_4	r_2, r_3	t_6, t_9	4	Y	3
θ_5	r_1, r_2, r_3	t_2, t_6, t_9, t_{10}	6	N	–
θ_6	r_1, r_2, r_3	t_5, t_6, t_9, t_{10}	7	Y	7
θ_7	r_1, r_2, r_3	$t_2, t_5, t_6, t_9, t_{10}$	6	N	–

Example 2: Consider S^{3}PMR (N, M_0) in Fig. 2, it has seven PRT-circuits, i.e., $\Theta = \{\theta_1, \theta_2, \ldots, \theta_7\}$. For each $\theta \in \Theta$, by solving its corresponding ILP1, $G(\theta)$ is computed and we have $\Xi = \{\theta_2, \theta_4, \theta_6\}$. Further, $X(\theta)$ is obtained for each θ in Ξ by solving its corresponding ILP2. All these details are shown in Table I. Let $\Gamma = \{\theta_2, \theta_4\}$. Note that $\Xi \backslash \Gamma = \{\theta_6\}$ and $X(\theta_6) = 7$. Since $\Im[\theta_6] \subseteq \Im[\theta_2] \cup \Im[\theta_4]$ and $X(\theta_6) > \max\{W(p)|p \in P[\theta_2]\} + \max\{W(p)|p \in P[\theta_4]\} = W(p_5) + W(p_6) = 3$, Γ is an effective transition cover of θ_6 and (N, M_0), respectively.

Definition 8: Given an S^{3}PMR (N, M_0) and $\theta \in \Xi$, define two weights for $p \in P_A$ with respect to θ as

$$W_\theta(p) = W(p) \text{ if } p \in P[\theta]; \text{otherwise } W_\theta(p) = 0$$
$$Q_\theta(p) = \max\{W_\theta(z)|z \in \Omega(p)\}$$

where $\Omega(p) = \{z \in P_A | p \prec z\}$.

Note that $p \in \Omega(p)$, and we have $Q_\theta(p) \geq W_\theta(p) \geq 0$. For the sake of self-completeness, we define $Q_\theta(\emptyset) = 0$.

Furthermore, for $\theta \in \Xi$, let $K_\theta = \{t \in P_0^\bullet | Q_\theta(t^{(a)}) > 0\}$ and $L_\theta = \{t \in T \backslash (P_0^\bullet \cup^\bullet P_0) | Q_\theta({}^{(a)}t) > Q_\theta(t^{(a)})\}$.

Indeed, K_θ is the collection of source transitions whose post operation place is previous to some place in $P[\theta]$; while L_θ is a collection of transitions in $t \in T \backslash (P_0^\bullet \cup^\bullet P_0)$ such that $\forall t \in L_\theta$, $Q_\theta({}^{(a)}t) > Q_\theta(t^{(a)})$.

Example 3: Reconsider S^{3}PMR (N, M_0) in Fig. 2. $\Xi = \{\theta_2, \theta_4, \theta_6\}$. $\Gamma = \{\theta_2, \theta_4\}$ is an effective transition cover of (N, M_0). For θ_2, $P[\theta_2] = \{p_5, p_{10}\}$, $W_{\theta 2}(p_5) = W(p_5) = 2$, $W_{\theta 2}(p_{10}) = W(p_{10}) = 1$, and $W_{\theta 2}(p) = 0$ for $p \in P_A \backslash P[\theta_2]$. Since $\Omega(p_5) = \{p_5, p_6, p_7\}$, then $Q_{\theta 2}(p_5) = \max\{W_{\theta 2}(p_5), W_{\theta 2}(p_6), W_{\theta 2}(p_7)\} = 2$. As the same reasons, we have $Q_{\theta 2}(p_9) = Q_{\theta 2}(p_{10}) = 1$ and $Q_{\theta 2}(p) = 0$ for $p \in P_A \backslash \{p_5, p_9, p_{10}\}$. For θ_4, similarly, we have $P[\theta_4] = \{p_6, p_9\}$, $W_{\theta 4}(p_6) = 2$, $W_{\theta 4}(p_9) = 1$, and $W_{\theta 4}(p) = 0$ for $p \in P_A \backslash P[\theta_4]$. Then $Q_{\theta 4}(p_5) = Q_{\theta 4}(p_6) = 2$, $Q_{\theta 4}(p_9) = 1$, and $Q_{\theta 4}(p) = 0$, $p \in P_A \backslash \{p_5, p_6, p_9\}$. Based on these calculated weights $Q_\theta(p)$, $\forall \theta \in \Gamma$, $\forall p \in P_A$, we obtain $K_{\theta 2} = \{t_4, t_8\}$, $L_{\theta 2} = \{t_5, t_{10}\}$, $K_{\theta 4} = \{t_4, t_8\}$, and $L_{\theta 4} = \{t_6, t_9\}$.

The following lemma shows that $\forall \theta \in \Xi$, the set $\{p \in P_A | Q_\theta(p) > 0\}$ is equivalent to Δ_θ.

Lemma 5: Let (N, M_0) be an S^{3}PMR and $\theta \in \Xi$. Then $\{p \in P_A | Q_\theta(p) > 0\} = \Delta_\theta$.

Proof: Let $p \in P_A$ with $Q_\theta(p) > 0$. Then $\exists z \in \Omega(p)$, i.e., $p \prec z$, such that $W_\theta(z) > 0$. By the definition of $W_\theta(z)$, we have $z \in P[\theta]$ and hence $p \prec P[\theta]$. That is, $p \in \Delta_\theta$. On the contrary, let $p \in \Delta_\theta$. Then $\exists z \in P[\theta]$ such that $p \prec z$. Since $W(z) > 0$ and $z \in \Omega(p)$, $Q_\theta(p) = \max\{W_\theta(x)|x \in \Omega(p)\} \geq W_\theta(z) = W(z) > 0$. Therefore, $\{p \in P_A | Q_\theta(p) > 0\} = \Delta_\theta$. ■

In the following, deadlock prevention controllers are developed for S^{3}PMRs by adding a control place with a proper initial marking to each PRT-circuit in a given effective transition cover.

Definition 9: Let (N, M_0) be an S^{3}PMR and $\Gamma \subseteq \Xi$ be an effective transition cover of (N, M_0). Define a Petri net controller for (N, M_0) with respect to Γ

$$(C_\Gamma, M_\Gamma) = (P_\Gamma, T_\Gamma, F_\Gamma, W_\Gamma, M_\Gamma)$$

where $P_\Gamma = \{p_\theta | \theta \in \Gamma\}$ is the set of control places. $T_\Gamma = \cup_{\theta \in \Gamma}\{K_\theta \cup L_\theta\}$. $F_\Gamma = \{(p_\theta, t) | t \in K_\theta, \theta \in \Gamma\} \cup \{(t, p_\theta) | t \in L_\theta, \theta \in \Gamma\}$. For $\theta \in \Gamma$, $\forall t \in K_\theta$, $\forall t_1 \in L_\theta$, $W_\Gamma(p_\theta, t) = Q_\theta(t^{(a)})$, and $W_\Gamma(t_1, p_\theta) = Q_\theta({}^{(a)}t_1) - Q_\theta(t_1^{(a)})$. $M_\Gamma(p_\theta) = X(\theta) - \rho_\theta$, where ρ_θ is an integer control variable for $\theta \in \Gamma$, satisfying the following inequalities:

$$1 \leq \rho_\theta \leq X(\theta) - \max\{W(p)|p \in P[\theta]\}, \forall \theta \in \Gamma \tag{13}$$

$$\Sigma_{\theta \in \Gamma(\alpha)} \rho_\theta \geq \Sigma_{\theta \in \Gamma(\alpha)} X(\theta) - X(\alpha) - k_{\Gamma(\alpha)} + 1 \quad \forall \alpha \in \Theta \setminus \Gamma \tag{14}$$

where $\Gamma(\alpha) \in \Pi(\Gamma)$.

Note that the control variable ρ_θ satisfying (13) and (14) may be not unique. The following lemma states that in (C_Γ, M_Γ) for each PRT-circuit $\theta \in \Gamma$, the initial marking of its control place $p_\theta, M_\Gamma(p_\theta)$, is greater than or equal to the maximal weight of output arcs of p_θ. Hence, each transition in $p_\theta^\bullet$ can be fired at M_Γ.

Lemma 6: Let Γ be an effective transition cover of S^{3}PMR (N, M_0), and (C_Γ, M_Γ) be the controller with respect to Γ for (N, M_0) in Definition 9. Then $M_\Gamma(p_\theta) \geq \max\{W_\Gamma(p_\theta, t)|t \in p_\theta^\bullet\}$ for $p_\theta \in P_\Gamma$.

Proof: By constraint (13) in Definition 9, $M_\Gamma(p_\theta) = X(\theta) - \rho_\theta \geq \max\{W(p)|p \in P[\theta]\}$. Meanwhile, we have $\max\{W(p)|p \in P[\theta]\} = \max\{W_\theta(p)|p \in P[\theta]\} = \max\{Q_\theta(p)|p \in P_A\} \geq \max\{W_\Gamma(p_\theta, t)|t \in p_\theta^\bullet\}$ according to Definition 9. Thus, $M_\Gamma(p_\theta) \geq \max\{W_\Gamma(p_\theta, t)|t \in p_\theta^\bullet\}$. ■

Let $(CN_\Gamma, M_{\Gamma 0}) = (N, M_0) \otimes (C_\Gamma, M_\Gamma)$ be the controlled system in Definition 9. We have the following result about $(CN_\Gamma, M_{\Gamma 0})$.

Lemma 7: Let $M \in R(CN_\Gamma, M_{\Gamma 0})$ and $\theta \in \Gamma$. Then

$$\Sigma_{p \in P_A} Q_\theta(p) M(p) + M(p_\theta) = M_{\Gamma 0}(p_\theta). \tag{15}$$

Proof: Please refer to Appendix A. ■

Example 4: Reconsider S^{3}PMR (N, M_0) in Fig. 2, $\Xi = \{\theta_2, \theta_4, \theta_6\}$. Recall that $\Gamma = \{\theta_2, \theta_4\}$ is an effective transition cover of θ_6 as well as (N, M_0). The controller (C_Γ, M_Γ) with

Authorized licensed use limited to: Chulalongkorn University provided by UniNet. Downloaded on March 08,2026 at 05:25:48 UTC from IEEE Xplore. Restrictions apply.

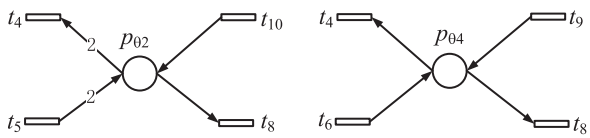

Fig. 3. Petri net structure of controller (C_Γ, M_Γ).

respect to Γ for (N, M_0) in Definition 9 contains two control places $p_{\theta 2}$ and $p_{\theta 4}$ corresponding to θ_2 and θ_4, respectively. Note that $\Delta_{\theta 2} = \{p_5, p_9, p_{10}\}$, $\Delta_{\theta 4} = \{p_5, p_6, p_9\}$, $A_{\theta 2} = \Delta_{\theta 2} \backslash P[\theta_2] = \{p_9\}$, $A_{\theta 4} = \Delta_{\theta 4} \backslash P[\theta_4] = \{p_5\}$, $\Gamma(\theta_6) = \{\theta_2, \theta_4\}$, $A_{\Gamma(\theta 6)} = A_{\theta 2} \cup A_{\theta 4} = \{p_5, p_9\}$, $B_{\Gamma(\theta 6)} = A_{\Gamma(\theta 6)} \cap P[\theta_6] = \{p_5, p_9\}$, and $k_{\Gamma(\theta 6)} = |B_{\Gamma(\theta 6)}| = 2$. The control variables $\rho_{\theta 2}$ and $\rho_{\theta 4}$ satisfy the following inequalities:

$$1 \le \rho_{\theta 2} \le X(\theta_2) - \max\{W(p)|p \in P[\theta_2]\} = 6 - 2 = 4$$
$$1 \le \rho_{\theta 4} \le X(\theta_4) - \max\{W(p)|p \in P[\theta_4]\} = 3 - 2 = 1$$
$$\rho_{\theta 2} + \rho_{\theta 4} \ge X(\theta_2) + X(\theta_4) - X(\theta_6) - k_{\Gamma(\theta 6)} + 1 = 1.$$

By solving the above integer linear inequalities via LINGO 11, we obtain four solutions: $(\rho_{\theta 2}, \rho_{\theta 4}) = (1, 1), (2, 1), (3, 1)$, and $(4, 1)$. Thus, by Definition 9, four Petri net controllers can be designed with the same structure C_Γ as shown in Fig. 3 and different initial markings $M_\Gamma \equiv (M_\Gamma(p_{\theta 2}), M_\Gamma(p_{\theta 4})) = (5, 2)$, $(4, 2)$, $(3, 2)$, and $(2, 2)$, respectively.

Example 4 shows that based on a given effective transition cover Γ of (N, M_0), the control variables ρ_θ satisfying constraints (13) and (14) may not be unique, and in this case, more than one controller can be designed according to Definition 9. These controllers have the same structure, but different initial markings. Next, we have to prove that any of them can enforce the liveness of (N, M_0). First we have the following result.

Lemma 8: Let Γ be an effective transition cover of S^{3}PMR (N, M_0), (C_Γ, M_Γ) a controller for (N, M_0) with respect to Γ in Definition 9. Then any PRT-circuit in Ξ cannot be saturated at any reachable marking of the controlled system $(CN_\Gamma, M_{\Gamma 0}) = (N, M_0) \otimes (C_\Gamma, M_\Gamma)$.

Proof: Please refer to Appendix B. ■

Then based on Lemma 8, the liveness of $(CN_\Gamma, M_{\Gamma 0})$ can be proved in the following.

Theorem 3: Let Γ be an effective transition cover of S^{3}PMR (N, M_0) and (C_Γ, M_Γ) be a controller with respect to Γ for (N, M_0) in Definition 9. Then the controlled system $(CN_\Gamma, M_{\Gamma 0}) = (N, M_0) \otimes (C_\Gamma, M_\Gamma)$ is live.

Proof: By Definition 9, the output arcs of every control place in (C_Γ, M_Γ) point to source transitions in $P_0^\bullet$. Actually, each source transition represents the entry of a raw part into the system and its firing does not release any token to a resource or control place. Hence new circular wait, one of the four necessary conditions of deadlock, is never met due to the addition of p_θ. That is, the addition of controller (C_Γ, M_Γ) does not lead to new deadlocks. Hence, a deadlock (if it exists) in $(CN_\Gamma, M_{\Gamma 0})$ is caused by a saturated PRT-circuit in Ξ. In order to prove the liveness of $(CN_\Gamma, M_{\Gamma 0})$, we only need to show that all PRT-circuits in Ξ are not saturated at any reachable marking of $(CN_\Gamma, M_{\Gamma 0})$. By Lemma 8, this is true. Therefore, $(CN_\Gamma, M_{\Gamma 0})$, is live.

By Definition 9, for each control place $p_\theta \in P_\Gamma$, $M_\Gamma(p_\theta) = X(\theta) - \rho_\theta$. It is important to notice that the smaller the control variable ρ_θ is, the larger the initial marking $M_\Gamma(p_\theta)$ is, and hence the less restriction imposed on the original net, and the more reachable markings the controlled system has. Thus, in order to improve the controllers permissiveness, an ILP is solved to obtain the control variables and make their sum as small as possible

$$\text{ILP3}: \ \text{Min} \quad \Sigma_{\theta \in \Gamma} \rho_\theta$$
$$\text{s.t. (13) and (14).}$$

■

Lemma 9: ILP3 is feasible, i.e., it has at least one solution.

Proof: We shall show that $\rho_\theta = X(\theta) - \max\{W(p)|p \in P[\theta]\}$, $\theta \in \Gamma$, is a feasible solution of ILP3. By Comment 1, we have $X(\theta) > \max\{W(p)|p \in P[\theta]\}$. In addition, since $X(\theta)$ and $\max\{W(p)|p \in P[\theta]\}$ are both integers, it is clear that $X(\theta) - 1 \ge \max\{W(p)|p \in P[\theta]\}$. That is, $\rho_\theta = X(\theta) - \max\{W(p)|p \in P[\theta]\} \ge 1$, satisfying (13).

On the other hand, let $\Gamma(\alpha) \in \Pi(\Gamma)$, $\alpha \in \Theta \backslash \Gamma$. Since $\Gamma(\alpha)$ is an effective transition cover of α, $X(\alpha) > \Sigma_{\theta \in \Gamma(\alpha)} \max\{W(p)|p \in P[\theta]\}$, and $k_{\Gamma(\alpha)} \ge 0$, we have

$$\begin{aligned}\Sigma_{\theta \in \Gamma(\alpha)} \rho_\theta &= \Sigma_{\theta \in \Gamma(\alpha)} X(\theta) - \Sigma_{\theta \in \Gamma(\alpha)} \max\{W(p)|p \in P[\theta]\} \\ &> \Sigma_{\theta \in \Gamma(\alpha)} X(\theta) - X(\alpha) \\ &\ge \Sigma_{\theta \in \Gamma(\alpha)} X(\theta) - X(\alpha) - k_{\Gamma(\alpha)}.\end{aligned}$$

That is, $\Sigma_{\theta \in \Gamma(\alpha)} \rho_\theta > \Sigma_{\theta \in \Gamma(\alpha)} X(\theta) - X(\alpha) - k_{\Gamma(\alpha)}$. Since $\Sigma_{\theta \in \Gamma(\alpha)} X(\theta) - X(\alpha) - k_{\Gamma(\alpha)}$ and $\Sigma_{\theta \in \Gamma(\alpha)} \rho_\theta$ are both integers, $\Sigma_{\theta \in \Gamma(\alpha)} \rho_\theta \ge \Sigma_{\theta \in \Gamma(\alpha)} X(\theta) - X(\alpha) - k_{\Gamma(\alpha)} + 1$, satisfying (14). Hence $\rho_\theta = X(\theta) - \max\{W(p)|p \in P[\theta]\}$ is a feasible solution of LIP3. ■

The combination of Lemma 9 and Theorem 3 implies the following conclusion.

Theorem 4: Let Γ be an effective transition cover of S^{3}PMR (N, M_0). Then the controller (C_Γ, M_Γ) with respect to Γ in Definition 9, whose control variables are determined by solving ILP3, is a deadlock prevention controller for (N, M_0).

V. Existence and Computation of Effective Transition Covers of S^{3}PMR

From the last section, we know that effective transition covers play crucial roles in designing deadlock prevention controllers for an AMS. This section first proves the existence of computation and then presents a method for computing such effective transition covers. To this end, first we need to know all saturable PRT-circuits, i.e., Ξ. By Definition 4, each PRT-circuit is only related with transitions in T and resource places in P_R, and its transitions belong to $P_R^\bullet \cap {}^\bullet P_R$. Then all PRT-circuits should be contained in a so-called *resource-transition net* of N, $N_R = N[P_R \cup (P_R^\bullet \cap {}^\bullet P_R)]$.

Note that a PRT-circuit in S^{3}PMR (N, M_0) is a union of some elementary circuits in N_R. Xing *et al.* [33] proposed Algorithm *Find-All-Elementary-Circuits* (N_R) to enumerate all elementary circuits in N_R. In the following, Algorithm CPT is proposed to compute Ξ and Γ, i.e., a transition cover of (N, M_0). In Algorithm CPT, step 1 computes all elementary

Authorized licensed use limited to: Chulalongkorn University provided by UniNet. Downloaded on March 08,2026 at 05:25:48 UTC from IEEE Xplore. Restrictions apply.

Algorithm 1 Algorithm CPT (Computing All the PRT-Circuits That May Be Saturated and a Transition Cover)

Input: An S^3PMR (N, M_0) and its resource-transition net N_R;
Output: Ξ and Γ_0 (a transition cover of (N, M_0));

Step 1: Find all elementary circuits in N_R by using *Find-All-Elementary-Circuits* (N_R). Let Γ_0 be the set of all elementary circuits in N_R.

Step 2: Construct recursively the set Θ of PRT-circuits from Γ_0 as follows
(1) Let $\Theta = \Gamma_0$;
(2) For each $\theta_1 \in \Gamma_0$, and for every $\theta_2 \in \Theta$, if $\Re[\theta_1] \cap \Re[\theta_2] \neq \emptyset$ and $\theta_1 \cup \theta_2$ is not in Θ, then add $\theta_1 \cup \theta_2$ into Θ.
(3) Delete all non-perfect PRT-circuits in Θ.

Step 3: Set $\Xi = \emptyset$. For each $\theta \in \Theta$, solve its corresponding ILP1, obtain $G(\theta)$. If $G(\theta) = |\Re[\theta]| + |P[\theta]|$, add θ into Ξ.

Step 4: $\Gamma_0 := \Xi \cap \Gamma_0$. If $\Xi = \emptyset$, goto Sept 7;

Step 5: For each $\theta \in \Xi$, if $\Im[\theta] \nsubseteq \cup_{\varpi \in \Gamma 0} \Im[\varpi]$, let $\Gamma_0 := \Gamma_0 \cup \theta$.

Step 6: For each $\theta \in \Gamma_0$, if $\cup_{\varpi \in \Gamma 0 \setminus \{\theta\}} \Im[\varpi] \supseteq \Im[\varepsilon]$ for every $\varepsilon \in \Xi$, delete θ from Γ_0.

Step 7: Output Ξ and Γ_0.

circuits in N_R by using *Find-All-Elementary-Circuits* (N_R). Note that an RT-circuit can be expressed as the union of some elementary circuits. Steps 2 computes Θ, the set of all PRT-circuits, in an iterative manner. Step 3 obtain $G(\theta)$ for each $\theta \in \Theta$ by solving its corresponding ILP1, and then Ξ, the set of saturable PRT-circuits, is extracted from Θ. Step 4 sets $\Gamma_0 := \Xi \cap \Gamma_0$. If $\Xi = \Gamma_0 = \emptyset$, then by Theorem 2 the input net (N, M_0) is live and go to step 7. Step 5 adds any PRT-circuit, which is not covered by Γ_0, into Γ_0. To the end, Γ_0 will become a transition cover of (N, M_0). Further, step 6 minimizes Γ_0 such that no proper subset of Γ_0 is a transition cover of (N, M_0). Step 7 exits this algorithm and outputs Ξ and Γ_0.

Based on the above analysis, we have the following conclusion.

Theorem 5: Let (N, M_0) be an S^3PMR. Then Algorithm CPT can correctly output all saturable PRT-circuits and a transition cover of (N, M_0).

Indeed, if Algorithm CPT outputs $\Xi = \Gamma_0 = \emptyset$, then the input net S^3PMR (N, M_0) is live. In other words, Algorithm CPT can also be used to check the liveness of S^3PMRs, and it requires no generation of the reachability tree.

Note that some nonempty transition covers of (N, M_0) may not be effective (just as show in Example 5 in the next section). To check the effectiveness of transition covers and to transform noneffective ones into effective ones, Algorithm CET is presented.

In Algorithm CET, Γ denotes a transition cover and V denotes a set of effective transition covers. Also, the main body of this algorithm is an iterative process while(), which can be decomposed into five steps.

Step 1 (Lines 3–5): Choose an $\alpha \in \Xi \setminus \Phi$, find a minimal transition cover $\Gamma(\alpha) \subseteq \Gamma$ for α by using procedure Min() (lines 29–37).

Algorithm 2 Algorithm CET (Check the Effectiveness of Transition Covers and Transform Noneffective Ones Into Effective Ones)

Input: $\Gamma_0 \neq \emptyset$, a transition cover of S^3PMR (N, M_0).
Output: Γ, an effective transition cover of (N, M_0); $V = \{\Gamma(\alpha) | \Gamma(\alpha)$ is an effective transition cover of $\alpha \in \Xi \setminus \Gamma\}$.

1: Set $\Gamma = \Gamma_0$; $\Phi = \Gamma_0$; $V = \emptyset$;
2: while $(\Xi \setminus \Phi \neq \emptyset)$ do{
3: choose $\alpha \in \Xi \setminus \Phi$;
4: $\Gamma(\alpha) = \{\theta \in \Gamma | \Im[\theta] \cap \Im[\alpha] \neq \emptyset\}$;
5: Min($\Gamma(\alpha)$) by using Min procedure.
6: Solving its corresponding ILP2, yields $X(\alpha)$;
7: if$(X(\alpha) > \Sigma_{\theta \in \Gamma(\alpha)} \max\{W(p) | p \in P[\theta]\})$\{
8: $\Phi := \Phi \cup \{\alpha\}$; $V := V \cup \{\Gamma(\alpha)\}$;
9: }
10: else\{ // $\Gamma(\alpha)$ is a non-effective transition cover of α.
11: let $\vartheta(\alpha) = \{\chi \in \Gamma(\alpha) | \max\{W(p) | p \in P[\chi]\} = \max\{W(p) | p \in P[\alpha]\}$ and $\chi \cup \alpha \in \Xi\}$;
12: if$(\vartheta(\alpha) = \emptyset)$\{
13: $\Gamma := \Gamma \cup \{\alpha\}$; $\Phi := \Phi \cup \{\alpha\}$;
14: }
15: else\{
16: choose $\varpi \in \vartheta(\alpha)$, let $\beta = \alpha \cup \varpi$;
17: $\Gamma := (\Gamma\ \{\varpi\}) \cup \{\beta\}$;
18: $\Phi := \Phi \cup \{\alpha, \beta\}$; $\Gamma(\varpi) = \Gamma(\alpha) = \{\beta\}$;
19: $V := V \cup \{\Gamma(\varpi), \Gamma(\alpha)\}$;
20: for each $\Gamma(\varepsilon) \in V$ do\{
21: if $(\varpi \in \Gamma(\varepsilon))$\{
22: $\Gamma(\varepsilon) := (\Gamma(\varepsilon) \setminus \{\varpi\}) \cup \{\beta\}$;
23: Min($\Gamma(\varepsilon)$);
24: }
25: }
26: }
27: }
28: Output Γ and V;
29: Min($\Gamma(\mu)$)\{
30: Let $s = |\Gamma(\mu)|$;
31: Sort $\Gamma(\mu) = \{\theta_0, \theta_1, ..., \theta_{s-1}\}$ by size $|\Im[\mu] \cap \Im[\theta_i]|$ in a descending order;
32: for(int $i = 0$; $i++$; $i < s$) do\{
33: if $(\Im[\mu] \subseteq \Im[\Gamma(\mu) \setminus \theta_i])$\{
34: $\Gamma(\mu) := \Gamma(\mu) \setminus \{\theta_i\}$;
35: }
36: }
37: }//end of Min();

Step 2 (Lines 6–9): By solving the corresponding ILP2, $X(\alpha)$ is obtained. If $X(\alpha) > \Sigma_{\theta \in \Gamma(\alpha)} \max\{W(p) | p \in P[\theta]\}$, $\Gamma(\alpha)$ is an effective transition cover of α, and then add $\{\alpha\}$ and $\{\Gamma(\alpha)\}$ into Φ and V, respectively.

Step 3 (Lines 10–14): If $X(\alpha) \leq \Sigma_{\theta \in \Gamma(\alpha)} \max\{W(p) | p \in P[\theta]\}$ and $\vartheta(\alpha) = \{\chi \in \Gamma(\alpha) | \max\{W(p) | p \in P[\chi]\} = \max\{W(p) | p \in P[\alpha]\}$ and $\chi \cup \alpha \in \Xi\} = \emptyset$, add $\{\alpha\}$ into both Γ and Φ.

Step 4 (Lines 15–19): Then $\vartheta(\alpha) \neq \emptyset$. Choose an $\varpi \in \vartheta(\alpha)$, let $\beta = \alpha \cup \varpi$. Then $\beta \in \Xi$. Replace ϖ with β in Γ, i.e.,

Authorized licensed use limited to: Chulalongkorn University provided by UniNet. Downloaded on March 08,2026 at 05:25:48 UTC from IEEE Xplore. Restrictions apply.

$\Gamma := (\Gamma\ \{\varpi\}) \cup \{\beta\}$. Since $\Re[\alpha] \subseteq \Re[\beta]$ and $\Re[\varpi] \subseteq \Re[\beta]$, $\{\beta\} \subseteq \Gamma$ is a minimal transition cover of α and ϖ, respectively. In addition, since $\varpi \in \vartheta(\alpha)$ and $\beta = \alpha \cup \varpi$, we have max $\{W(p)|p \in P[\varpi]\} = \max\{W(p)|p \in P[\alpha]\} = \max\{W(p)|p \in P[\beta]\}$. Meanwhile, by Comment 1, $X(\alpha) > \max\{W(p)|p \in P[\alpha]\} = \max\{W(p)|p \in P[\beta]\}$. That is, $\{\beta\}$ is an effective transition cover of α. Similarly, $\{\beta\}$ is an effective transition cover of ϖ too. Add $\Gamma(\alpha) = \{\beta\}$ and $\Gamma(\varpi) = \{\beta\}$ into V, and add $\{\alpha, \beta\}$ into Φ.

Step 5 (Lines 20–25): For each $\Gamma(\varepsilon) \in V$ with $\varpi \in \Gamma(\varepsilon)$, we know that $X(\varepsilon) > \Sigma_{\upsilon\in\Gamma(\varepsilon)}\max\{W(p)|p \in P[\upsilon]\}$ but $\Gamma(\varepsilon) \nsubseteq \Gamma$ because $\Gamma(\varepsilon)\backslash\Gamma = \varpi$. Note that $\Im[\varpi] \subseteq \Im[\beta]$ and $\Im[\varepsilon] \subseteq \cup_{\upsilon\in\Gamma(\varepsilon)}\Im[\upsilon]$. Hence $\Im[\varepsilon] \subseteq \cup_{\upsilon\in(\Gamma(\varepsilon)\backslash\{\varpi\})\cup\{\beta\}}\Im[\upsilon]$, i.e., $(\Gamma(\varepsilon)\backslash\varpi)\cup\{\beta\}$ is a transition cover of ε. Moreover, since $\max\{W(p)|p \in P[\beta]\} = \max\{W(p)|p \in P[\varpi]\}$, we have $X(\varepsilon) > \Sigma_{\upsilon\in\Gamma(\varepsilon)}\max\{W(p)|p \in P[\upsilon]\} = \Sigma_{\upsilon\in(\Gamma(\varepsilon)\backslash\{\varpi\})\cup\{\beta\}}\max\{W(p)|p \in P[\upsilon]\}$. Then set $\Gamma(\varepsilon) = (\Gamma(\varepsilon)\backslash\varpi) \cup \{\beta\} \subseteq \Gamma$ and minimize $\Gamma(\varepsilon)$ by invoking procedure Min(). Note that the obtained $\Gamma(\varepsilon) \subseteq \Gamma$ and no more PRT-circuits are added into $\Gamma(\varepsilon)$ during Min(). Hence, $X(\varepsilon) > \Sigma_{\upsilon\in\Gamma(\varepsilon)}\max\{W(p)|p \in P[\upsilon]\}$ still holds, i.e., $\Gamma(\varepsilon)$ is an effective transition cover of ε. To the end, each $\Gamma(\varepsilon) \in V$ is an effective transition cover of ε and $\Gamma(\varepsilon) \subseteq \Gamma$.

When while() finishes, i.e., $\Phi = \Xi$, this algorithm outputs an effective transition cover Γ of (N, M_0) and a set $V = \{\Gamma(\alpha)|\Gamma(\alpha)$ is an effective transition cover of $\alpha \in \Xi\backslash\Gamma\}$.

From the above analysis, we have the following result.

Theorem 6: For any nonempty transition cover Γ_0 of S^{3}PMR (N, M_0), Algorithm CET can correctly output an effective transition cover Γ of (N, M_0) and (Γ), a set of effective transition covers of $\Gamma(\alpha)$ of $\alpha \in \Xi\backslash\Gamma$.

For marked S^{3}PMR (N, M_0), if the transition cover Γ_0 obtained by Algorithm CPT is an empty set, then (N, M_0) is live; otherwise, by Algorithm CET, an effective transition cover Γ for (N, M_0) is definitely obtained. Furthermore, based on Γ, a deadlock prevention controller can be derived for (N, M_0) with respect to Γ according to Definition 9. This procedure can be summarized as follows.

Procedure DCD (Deadlock Prevention Controller Design for S^{3}PMR): Given an S^{3}PMR (N, M_0).

Step 1: By Algorithm CPT, compute Ξ, the set of PRT-circuits that may be saturated, and Γ_0, a transition cover of (N, M_0). If $\Xi = \Gamma_0 = \emptyset$, then (N, M_0) is live and exist.

Step 2: By using Algorithm CET, check the effectiveness of Γ_0, and transform it into an effective one if it is not effective. Let Γ and $\Pi(\Gamma)$ be the output of Algorithm CET, where Γ is an effective transition cover of (N, M_0) and $\Pi(\Gamma) = \{\Gamma(\alpha)|\Gamma(\alpha) \subseteq \Gamma$ is an effective transition cover of each $\alpha \in \Xi\backslash\Gamma\}$.

Step 3: According to Definition 9, the Petri net structure C_Γ of controller (C_Γ, M_Γ) with respect to Γ for (N, M_0) is constructed, and the initial marking M_Γ is determined next.

Step 4: For each $\varepsilon \in \Xi$, solving its corresponding ILP2, we obtain $X(\varepsilon)$. Based on $\Pi(\Gamma)$ and $X(\varepsilon)$, establish an integer linear program ILP3, and solve it to obtain control variable ρ_θ for each $\theta \in \Gamma$. At the end, set $M_\Gamma(p_\theta) = X(\theta) - \rho_\theta$, $\theta \in \Gamma$.

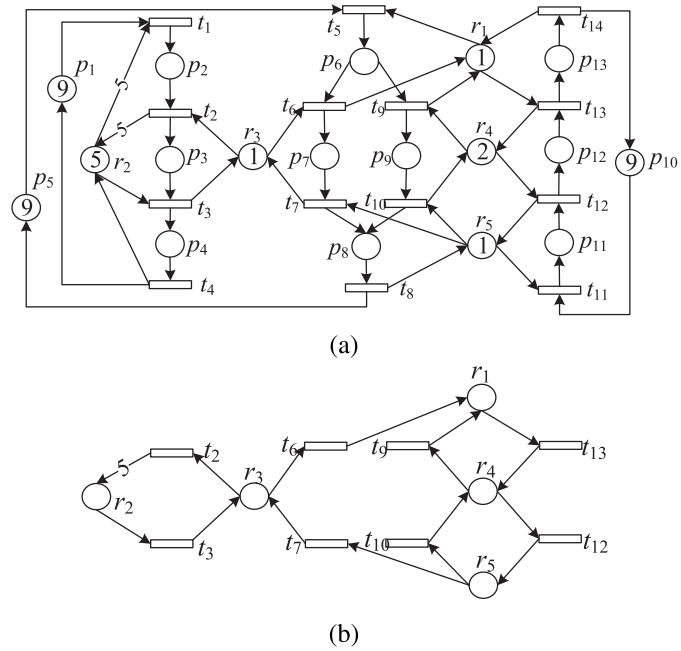

Fig. 4. (a) Example of S^{3}PMR (N, M_0) and (b) its corresponding resource-transition net N_R.

TABLE II
DETAILS OF PRT-CIRCUITS IN Ξ FOR (N, M_0) IN FIG. 4(a)

θ	$\Re[\theta]$	$\Im[\theta]$	$X(\theta)$
θ_1	r_4, r_5	t_{10}, t_{12}	3
θ_2	r_1, r_3, r_4, r_5	$t_6, t_7, t_9, t_{10}, t_{12}, t_{13}$	5
θ_3	r_1, r_3, r_4, r_5	$t_6, t_7, t_9, t_{12}, t_{13}$	5
θ_4	r_2, r_3	t_2, t_3	6
θ_5	r_1, r_2, r_3, r_4, r_5	$t_2, t_3, t_6, t_7, t_9, t_{12}, t_{13}$	10
θ_6	r_1, r_2, r_3, r_4, r_5	$t_2, t_3, t_6, t_7, t_9, t_{10}, t_{12}, t_{13}$	10

Theorem 7: Let (N, M_0) be an S^{3}PMR. Then the Petri net obtained by Procedure DCD is a deadlock prevention controller for (N, M_0).

VI. EXAMPLES

Example 5: Consider S^{3}PMR (N, M_0) in Fig. 4(a), its resource-transition net N_R is shown in Fig. 4(b). By Algorithm CPT, there are six PRT-circuits that may be saturated, $\Xi = \{\theta_1, \ldots, \theta_6\}$, and $\Gamma_0 = \{\theta_1, \theta_5\}$ is a transition cover of (N, M_0). Then for each $\theta \in \Xi$, by solving its corresponding ILP2, we obtain $X(\theta)$. The details of Ξ are shown in Table II. Note that $\Gamma_0 \neq \emptyset$. Now by Algorithm CET, we can check the effectiveness of Γ_0. At the beginning, $\Gamma = \Gamma_0$, $\Phi = \Gamma_0$, and $V = \emptyset$. Then $\Xi\backslash\Phi = \{\theta_2, \theta_3, \theta_4, \theta_6\}$.

In the first iteration of while(), choose $\theta_2 \in \Xi\backslash\Phi$. Note that $\Gamma(\theta_2) = \{\theta_1, \theta_5\} \subseteq \Gamma$ is a minimal transition cover of θ_2. Since $X(\theta_2) = 5 < \Sigma_{\theta\in\Gamma(\theta 2)}\max\{W(p)|p \in P[\theta]\} = W(p_2) + W(p_6) = 6$, $\Gamma(\theta_2)$ is not an effective transition cover of θ_2. In addition, we have $\vartheta(\theta_2) = \{\theta_1\}$ and $\theta_2 = \theta_2 \cup \theta_1$. Then by Algorithm CET, θ_1 is replaced with θ_2 in Γ, i.e., $\Gamma := (\Gamma\backslash\{\theta_1\}) \cup \{\theta_2\} = \{\theta_2, \theta_5\}$. In this case, $\Gamma(\theta_1) = \{\theta_2\} \subseteq \Gamma$ is

Authorized licensed use limited to: Chulalongkorn University provided by UniNet. Downloaded on March 08,2026 at 05:25:48 UTC from IEEE Xplore. Restrictions apply.

an effective transition cover of θ_1, $V := V \cup \{\Gamma(\theta_1)\} = \{\Gamma(\theta_1)\}$, and $\Phi := \Phi \cup \{\theta_2\} = \{\theta_1, \theta_2, \theta_5\}$.

In the second iteration of while(), choose $\theta_3 \in \Xi \backslash \Phi$. Since $\Im[\theta_3] \subseteq \Im[\theta_2]$ and $X(\theta_3) = 5 > \max\{W(p)|p \in P[\theta_2]\} = 1$, we obtain that $\Gamma(\theta_3) = \{\theta_2\}$ is a minimal and effective transition cover of θ_3. Then $V := V \cup \{\Gamma(\theta_3)\} = \{\Gamma(\theta_1), \Gamma(\theta_3)\}$ and $\Phi := \Phi \cup \{\theta_3\} = \{\theta_1, \theta_2, \theta_3, \theta_5\}$.

In the third iteration of while(), choose $\theta_4 \in \Xi \backslash \Phi$. Then $\Gamma(\theta_4) = \{\theta_5\} \subseteq \Gamma$ is a minimal and effective transition cover of θ_4, because $\Im[\theta_4] \subseteq \Im[\theta_5]$ and $X(\theta_4) = 6 > \max\{W(p)|p \in P[\theta_5]\} = 5$. Then $V := V \cup \{\Gamma(\theta_4)\} = \{\Gamma(\theta_1), \Gamma(\theta_3), \Gamma(\theta_4)\}$ and $\Phi := \Phi \cup \{\theta_4\} = \{\theta_1, \theta_2, \theta_3, \theta_4, \theta_5\}$.

In the fourth iteration of while(), choose $\theta_6 \in \Xi \backslash \Phi$. It is easy to verify that $\Gamma(\theta_6) = \{\theta_2, \theta_5\} \subseteq \Gamma$ is a minimal transition cover of θ_6. Since $X(\theta_6) = 10 > \Sigma_{\theta \in \Gamma(\theta 6)} \max\{W(p)|p \in P[\theta]\} = 6$, $\Gamma(\theta_6)$ is also an effective transition cover of θ_6. Then $V := V \cup \{\Gamma(\theta_6)\} = \{\Gamma(\theta_1), \Gamma(\theta_3), \Gamma(\theta_4), \Gamma(\theta_6)\}$ and $\Phi := \Phi \cup \{\theta_6\} = \Xi$.

After the four iterations, while() finishes with $\Phi = \Xi$. We obtain an effective transition cover $\Gamma = \{\theta_2, \theta_5\}$ of (N, M_0) and the set of effective transition covers of θ_1, θ_3, θ_4, and θ_6, i.e., $\Pi(\Gamma) = V = \{\Gamma(\theta_1), \Gamma(\theta_3), \Gamma(\theta_4), \Gamma(\theta_6)\}$, where $\Gamma(\theta_1) = \{\theta_2\}$, $\Gamma(\theta_3) = \{\theta_2\}$, $\Gamma(\theta_4) = \{\theta_5\}$, and $\Gamma(\theta_6) = \{\theta_2, \theta_5\}$.

Then based on Γ and $\Pi(\Gamma)$, a controller (C_Γ, M_Γ) with respect to Γ in Definition 9 can be constructed for (N, M_0). It contains two control place $p_{\theta 2}$ and $p_{\theta 5}$ corresponding to θ_2 and θ_5 in Γ, respectively. Note that for each $\theta \in \Gamma$, $\Delta_\theta = P[\theta]$, and hence $A_\theta = \Delta_\theta \backslash P[\theta] = \emptyset$. Then $A_{\Gamma(\theta_1)} = \cup_{\theta \in \Gamma(\theta 1)} A_\theta = \emptyset$, $B_{\Gamma(\theta 1)} = A_{\Gamma(\theta 1)} \cap P[\theta_1] = \emptyset$, and $k_{\Gamma(\theta 1)} = |B_{\Gamma(\theta 1)}| = 0$. Similarly, we have $A_{\Gamma(\theta 3)} = A_{\Gamma(\theta 4)} = A_{\Gamma(\theta 6)} = \emptyset$, $B_{\Gamma(\theta 3)} = B_{\Gamma(\theta 4)} = B_{\Gamma(\theta 6)} = \emptyset$, and $k_{\Gamma(\theta 3)} = k_{\Gamma(\theta 4)} = k_{\Gamma(\theta 6)} = 0$. The control variables, $\rho_{\theta 2}$ and $\rho_{\theta 5}$, are determined by the following ILP:

$$
\begin{aligned}
\text{ILP4 : Min} \quad & \rho_{\theta 2} + \rho_{\theta 5} \\
\text{s.t.} \quad & 1 \le \rho_{\theta 2} \le X(\theta_2) - \max\{W(p)|p \in P[\theta_2]\} = 4 \\
& 1 \le \rho_{\theta 5} \le X(\theta_5) - \max\{W(p)|p \in P[\theta_5]\} = 5 \\
& \rho_{\theta 2} \ge X(\theta_2) - X(\theta_1) - k_{\Gamma(\theta 1)} + 1 = 3 \\
& \rho_{\theta 2} \ge X(\theta_2) - X(\theta_3) - k_{\Gamma(\theta 3)} + 1 = 1 \\
& \rho_{\theta 5} \ge X(\theta_5) - X(\theta_4) - k_{\Gamma(\theta 4)} + 1 = 5 \\
& \rho_{\theta 2} + \rho_{\theta 5} \ge X(\theta_2) + X(\theta_5) - X(\theta_6) \\
& \qquad - k_{\Gamma(\theta 6)} + 1 = 6 \\
& \rho_{\theta 2}, \rho_{\theta 5} \in \mathbb{Z}.
\end{aligned}
$$

By solving ILP4 via LINGO 11, the runtime is indicated to be zero and the unique solution is : $\rho_{\theta 2} = 3$ and $\rho_{\theta 5} = 5$. Thus the deadlock controller (C_Γ, M_Γ) with respect to Γ for (N, M_0) can be constructed as shown in Fig. 5. Then controlled system $(N, M_0) \otimes (C_\Gamma, M_\Gamma)$ is live and has 132 reachable states.

In this paper, all ILPs are solved via LINGO 11 performed on a 3.4 GHz Core i7-2600 CPU computer with 4.0 GB RAM under Window 7 operating system. Moreover, in this example, the runtime to solve each ILP in Algorithms CET and CPT is indicated to be zero.

Li *et al.* [17] proposed a liveness-enforcing supervisor for S^4PR by using elementary siphons such that the complexity of the controller is reduced. Since S^3PMR is a subclass of

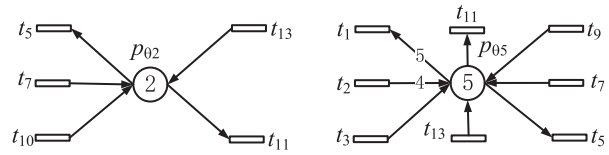

Fig. 5. Deadlock controller (C_Γ, M_Γ) for (N, M_0) in Fig. 4(a).

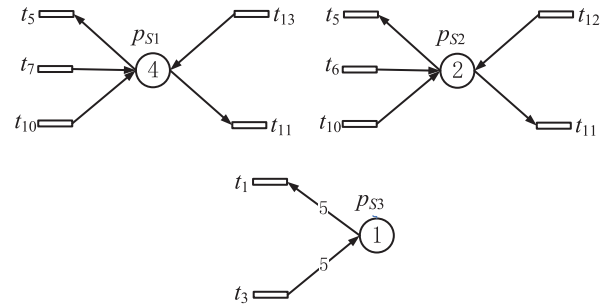

Fig. 6. Elementary siphon-based deadlock controller (C, M) for (N, M_0) in Fig. 4(a).

S^4PR, the method for designing liveness-enforcing supervisor in [17] is also suitable for S^3PMRs. Note that (N, M_0) in this example contains four SMSs, namely, $S_1 = \{r_1, r_3, r_4, r_5, p_3, p_8, p_{13}\}$, $S_2 = \{r_4, r_5, p_8, p_{12}\}$, $S_3 = \{r_2, r_3, p_4, p_7\}$, and $S_4 = \{r_1, r_2, r_3, r_4, r_5, p_4, p_8, p_{13}\}$. It is easy to verify that $\{S_1, S_2, S_3\}$ is a set of elementary siphons and S_4 is strongly dependent on S_1 and S_3. Then according to [17], the elementary siphon-based deadlock controller (C, M_C) for (N, M_0) is constructed as shown in Fig. 6. It has three control places $p_{S1} - p_{S3}$ corresponding to siphons in $\{S_1, S_2, S_3\}$, and their initial markings are 4, 2, and 1, respectively.

Note that the controller (C, M_C) has three control places, and our new developed controller has only two control places. On the other hand, we should also notice that in Fig. 6, t_1 is dead under the control of (C, M_C) since $M_C(p_{S3}) = 1 < W(p_{S3}, t_1) = 5$. That is, (C, M_C) cannot ensure the liveness of (N, M_0).

Example 6: Consider S^3PMR (N, M_0) in Fig. 7. By Algorithm CPT, we obtain $\Xi = \{\theta_1, \ldots, \theta_{11}\}$, the set of PRT-circuits that may be saturated, and $\Gamma = \{\theta_1 - \theta_4, \theta_7, \theta_8, \theta_{11}\}$, a transition cover of (N, M_0). For each $\theta \in \Xi$, by solving its corresponding ILP2, we obtain $X(\theta)$, The details of Ξ are shown in Table III. Then by using Algorithm CET, it is easily checked that Γ is an effective transition cover of (N, M_0), and a set of effective transition covers, $\Pi(\Gamma)$, is obtained, where $\Pi(\Gamma) = \{\Gamma(\theta_i), i \in \mathbb{Z}_{11} \backslash \{1 - 4, 7, 8, 11\}\}$, $\Gamma(\theta_5) = \{\theta_7\}$, $\Gamma(\theta_6) = \{\theta_8\}$, $\Gamma(\theta_9) = \{\theta_1, \theta_{11}\}$, and $\Gamma(\theta_{10}) = \{\theta_4\}$.

By Definition 9, the controller (C_Γ, M_Γ) with respect to Γ contains seven control places $p_{\theta 1} - p_{\theta 4}$, $p_{\theta 7}$, $p_{\theta 8}$, and $p_{\theta 11}$ corresponding to PRT-circuits in Γ, respectively. Then, we shall establish an ILP with respect to $\Pi(\Gamma)$ to determine the control variables $\rho_{\theta 1} - \rho_{\theta 4}$, $\rho_{\theta 7}$, $\rho_{\theta 8}$, and $\rho_{\theta 11}$ of (C_Γ, M_Γ). First, the inequalities in constraint (14) related with $\Pi(\Gamma)$ are established. For θ_5, $\Gamma(\theta_5) = \{\theta_7\}$. Since $\Delta_{\theta 7} = \{p_4, p_7, p_8, p_9, p_{10}, p_{12}, p_{13}, p_{14}, p_{15}, p_{16}\}$, we have $A_{\Gamma(\theta 5)} = A_{\theta 7} = \Delta_{\theta 7} \backslash P[\theta_7] = \{p_7, p_8, p_9, p_{12}, p_{13}\}$, $B_{\Gamma(\theta 5)} = A_{\Gamma(\theta 5)} \cap P[\theta_5] = \emptyset$, and $k_{\Gamma(\theta 5)} = 0$. Its corresponding

Authorized licensed use limited to: Chulalongkorn University provided by UniNet. Downloaded on March 08,2026 at 05:25:48 UTC from IEEE Xplore. Restrictions apply.

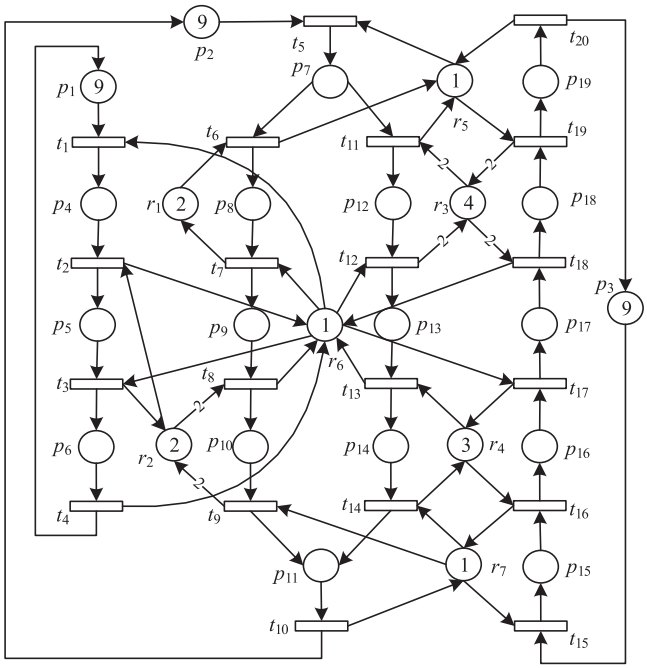

Fig. 7. Example of S^3PMR (N, M_0).

TABLE III
DETAILS OF PRT-CIRCUITS IN Ξ FOR (N, M_0) IN FIG. 7

θ	$\Re[\theta]$	$\Im[\theta]$	$X(\theta)$
θ_1	r_4, r_7	t_{14}, t_{16}	4
θ_2	r_2, r_6	t_2, t_3	3
θ_3	r_2, r_6	t_3, t_8	2
θ_4	r_1, r_3, r_5, r_6	$t_6, t_7, t_{11}, t_{12}, t_{18}, t_{19}$	8
θ_5	r_2, r_4, r_6, r_7	t_2, t_9, t_{16}, t_{17}	7
θ_6	r_2, r_4, r_6, r_7	t_8, t_9, t_{16}, t_{17}	7
θ_7	r_2, r_4, r_6, r_7	$t_2, t_9, t_{14}, t_{16}, t_{17}$	7
θ_8	r_2, r_4, r_6, r_7	$t_8, t_9, t_{14}, t_{16}, t_{17}$	7
θ_9	r_4, r_6, r_7	$t_{13}, t_{14}, t_{16}, t_{17}$	5
θ_{10}	r_3, r_6	t_{12}, t_{18}	5
θ_{11}	r_4, r_6	t_{13}, t_{17}	4

inequality is

$$\rho_{\theta 7} \geq X(\theta_7) - X(\theta_5) - k_{\Gamma(\theta 5)} + 1 = 1.$$

For θ_9, $\Gamma(\theta_9) = \{\theta_1, \theta_{11}\}$. Then since $\Delta_{\theta 1} = \{p_7, p_{12}, p_{13}, p_{14}, p_{15}\}$, $A_{\theta 1} = \Delta_{\theta 1} \backslash P[\theta_1] = \{p_7, p_{12}, p_{13}\}$, $\Delta_{\theta 11} = \{p_7, p_{12}, p_{13}, p_{15}, p_{16}\}$, and $A_{\theta 11} = \Delta_{\theta 11} \backslash P[\theta_{11}] = \{p_7, p_{12}, p_{15}\}$, we have $A_{\Gamma(\theta 9)} = A_{\theta 1} \cup A_{\theta 11} = \{p_7, p_{12}, p_{13}, p_{15}\}$, $B_{\Gamma(\theta 9)} = A_{\Gamma(\theta 9)} \cap P[\theta_9] = \{p_{13}, p_{15}\}$, and $k_{\Gamma(\theta 9)} = 2$. Its corresponding inequality is

$$\rho_{\theta 1} + \rho_{\theta 11} \geq X(\theta_1) + X(\theta_{11}) - X(\theta_9) - k_{\Gamma(\theta 9)} + 1 = 2.$$

Finally, we can establish all the inequalities in constraint (14) with respect to $\Pi(\Gamma)$, and the corresponding ILP is established as follows:

$$\begin{aligned} \text{LIP5}: \text{Min} \quad & \rho_{\theta 1} + \rho_{\theta 2} + \rho_{\theta 3} + \rho_{\theta 4} + \rho_{\theta 7} + \rho_{\theta 8} + \rho_{\theta 11} \\ \text{s.t.} \quad & 1 \leq \rho_{\theta 1} \leq 3, 1 \leq \rho_{\theta 2} \leq 2, 1 \leq \rho_{\theta 3} \leq 1 \\ & 1 \leq \rho_{\theta 4} \leq 6, 1 \leq \rho_{\theta 7} \leq 5, 1 \leq \rho_{\theta 8} \leq 5 \\ & 1 \leq \rho_{\theta 11} \leq 3, \rho_{\theta 7} \geq 1, \rho_{\theta 8} \geq 1 \\ & \rho_{\theta 1} + \rho_{\theta 11} \geq 2, \rho_{\theta 4} \geq 4 \\ & \rho_{\theta i} \in \mathbb{Z}. \end{aligned}$$

TABLE IV
DEADLOCK CONTROLLER (C_Γ, M_Γ) FOR (N, M_0) IN FIG. 7

p_θ	$p_\theta^\bullet$	${}^\bullet p_\theta$	$M_\Gamma(p_\theta)$
$p_{\theta 1}$	t_5, t_{15}	t_6, t_{14}, t_{16}	3
$p_{\theta 2}$	t_1	t_3	2
$p_{\theta 3}$	t_1, t_5	t_3, t_{11}, t_8	1
$p_{\theta 4}$	$2t_5, 2t_{15}$	$t_6, t_7, 2t_{12}, 2t_{19}$	4
$p_{\theta 7}$	$t_1, 2t_5, t_{15}$	$t_2, 2t_9, t_{11}, t_{14}, t_{17}$	6
$p_{\theta 8}$	$2t_5, t_{15}$	$2t_9, t_{11}, t_{14}, t_{17}$	6
$p_{\theta 11}$	t_5, t_{15}	t_6, t_{13}, t_{17}	3

TABLE V
ALL THE SMSS FOR (N, M_0) IN FIG. 7

i	S_i
1	$p_4, p_6, p_9, p_{13}, p_{19}, r_1, r_3, r_5, r_6$
2	$p_6, p_{10}, p_{13}, p_{17}, r_2, r_6$
3	$p_6, p_{11}, p_{17}, r_2, r_6, r_4, r_7$
4	$p_4, p_6, p_9, p_{13}, p_{18}, r_3, r_6$
5	$p_4, p_6, p_9, p_{14}, p_{17}, r_4, r_6$
6	p_{11}, p_{16}, r_4, r_7
7	$p_6, p_{10}, p_{13}, p_{19}, r_1, r_2, r_3, r_6, r_5$
8	$p_6, p_{11}, p_{19}, r_1, r_2, r_3, r_4, r_6, r_5, r_7$
9	$p_4, p_6, p_9, p_{14}, p_{19}, r_1, r_3, r_4, r_5, r_6$
10	$p_6, p_{10}, p_{13}, p_{18}, r_2, r_3, r_6$
11	$p_6, p_{10}, p_{14}, p_{17}, r_2, r_4, r_6$
12	$p_6, p_{10}, p_{14}, p_{19}, r_1, r_2, r_3, r_4, r_5, r_6$
13	$p_6, p_{11}, p_{18}, r_2, r_3, r_4, r_6, r_7$
14	$p_4, p_6, p_9, p_{14}, p_{18}, r_3, r_4, r_6$
15	$p_6, p_{10}, p_{14}, p_{18}, r_2, r_3, r_4, r_6$
16	$p_4, p_6, p_9, p_{11}, p_{17}, r_4, r_6, r_7$
17	$p_4, p_6, p_9, p_{11}, p_{19}, r_1, r_3, r_4, r_5, r_6, r_7$
18	$p_4, p_6, p_9, p_{11}, p_{18}, r_3, r_4, r_6, r_7$

TABLE VI
ELEMENTARY SIPHON-BASED DEADLOCK CONTROLLER (C, M_C) FOR(N, M_0) IN FIG. 7

p_S	$p_S^\bullet$	${}^\bullet p_S$	$M_C(p_S)$
p_{S1}	t_5, t_{15}	t_6, t_{14}, t_{16}	3
p_{S2}	t_1	t_3	2
p_{S3}	t_1, t_5	t_3, t_{11}, t_8	1
p_{S4}	$2t_5, 2t_{15}$	$t_6, t_7, 2t_{12}, 2t_{19}$	4
p_{S5}	$t_1, 2t_5, t_{15}$	$t_2, 2t_9, t_{11}, t_{14}, t_{17}$	6
p_{S6}	$2t_5, t_{15}$	$2t_9, t_{11}, t_{14}, t_{17}$	6

By LINGO 11, the unique solution of ILP5 is obtained: $\rho_{\theta 1} = \rho_{\theta 2} = \rho_{\theta 3} = \rho_{\theta 7} = \rho_{\theta 8} = 1$ and $\rho_{\theta 4} = 4$; while the runtime is indicated to be zero. The deadlock controller (C_Γ, M_Γ) with respect to Γ for (N, M_0) is as shown in Table IV. In addition, in this example, the runtime to solve each ILP in Algorithms CET and CPT is indicated to be zero.

Let $(CN_\Gamma, M_{\Gamma 0}) = (N, M_0) \otimes (C_\Gamma, M_\Gamma)$ be the controlled system. It is live and has 1555 reachable states.

Now we establish a deadlock controller for (N, M_0) by using the elementary siphon-based approach in [17]. Note that (N, M_0) has 18 SMSs, which are shown in Table V.

It is easy to verify that $\{S_1 - S_6\}$ is a set of elementary siphons of (N, M_0). According to the methods in [17], a deadlock controller (C, M_C) according to elementary siphons set $\{S_1 - S_6\}$ is constructed and shown in Table VI. The controlled system is live and has 1368 reachable markings.

Although our controller (C_Γ, M_Γ) has one more control place than the elementary siphon-based controller (C, M_C), its permissiveness is improved by $13.7 \approx (1555 - 1368)\backslash 1368$.

Authorized licensed use limited to: Chulalongkorn University provided by UniNet. Downloaded on March 08,2026 at 05:25:48 UTC from IEEE Xplore. Restrictions apply.

VII. Conclusion

Based on PRT-circuits, this paper presents the liveness analysis and deadlock control of generalized Petri nets, S^3PMRs, modeling AMSs with multiple resource requirements. We start by showing that an S^3PMR is live if and only if no PRT-circuit is saturated at all reachable marking. Similar work has been done in [18], but their conclusion is proved to be defective in [30]. Note that a PRT-circuit of an S^3PMR may be not saturated at any reachable marking. We propose an ILP to determine whether a PRT-circuit can be saturated or not, and hence the set of saturable PRT-circuits is computed.

In order to develop a deadlock prevention controller with small size for AMSs, we extend the concept of transition covers in [19] from S^3PRs to S^3PMRs. Then by adding a control place with a proper control variable for each PRT-circuit in a so-called effective transition cover, it is proved that deadlocks are prevented, whereas the control variables can be determined by solving an ILP to make their sum as small as possible, and hence the permissiveness of the controller is guaranteed and sometimes improved. Since the number of PRT-circuits in an effective transition cover is much less than that of PRT-circuits to be controlled, our controller is of small structural size. In addition, some examples show that, compared with an elementary siphon-based liveness-enforcing controller [17] for S^3PMR, our controller permits more legal markings.

Given an S^3PMR, an algorithm, namely, CPT, is proposed to compute its transition cover and the set of all PRT-circuits that may be saturated. Further, an algorithm, namely, CET is presented for checking the effectiveness of any nonempty transition cover, and transforming noneffective transition covers into effective ones. Hence, for any S^3PMR with saturable PRT-circuits, there exists at least an effective transition cover, and based on it, a deadlock prevention controller can be designed.

Our future research is to perform the liveness characterization in terms of RT-circuits in more general Petri nets such as S^4PRs, and analyzing how to select effective transition covers such that the performance of the resulting controllers is improved.

Appendix A
Proof of Lemma 7

The proof is made by induction. Let $\varpi = t_0 t_1 t_2 \ldots t_{n-1}$ be a sequence of transitions with length n, $M_{\Gamma 0}[\varpi > M_1$. If $\varpi = \varepsilon$ (empty string), then $M_1 = M_{\Gamma 0}$, and each place in P_A is empty at $M_{\Gamma 0}$, hence (15) holds at $M_{\Gamma 0}$. Now assume $t \in T$, $M_1[t > M_2$, and (15) is verified by M_1. According to whether t belongs to K_θ or L_θ, there are three cases to be considered.

Case 1: $t \in K_\theta$. Then $t^{(a)} \in P_A$, $M_2(t^{(a)}) = M_1(t^{(a)}) + 1$ and $\Sigma_{p \in P_A} Q_\theta(p) M_2(p) = \Sigma_{p \in P_A} Q_\theta(p) M_1(p) + Q_\theta(t^{(a)})$. Since arc (p_θ, t) exists and its weight is $Q_\theta(t^{(a)})$, $M_2(p_\theta) = M_1(p_\theta) - Q_\theta(t^{(a)})$.

Case 2: $t \in L_\theta$. Then ${}^{(a)}t, t^{(a)} \in P_A$, $M_2({}^{(a)}t) = M_1({}^{(a)}t) - 1$, and $M_2(t^{(a)}) = M_1(t^{(a)}) + 1$. Also, since $t \in {}^\bullet p_\theta$ and $W_\Gamma(t, p_\theta) = Q_\theta({}^{(a)}t) - Q_\theta(t^{(a)})$, we have $M_2(p_\theta) = M_1(p_\theta) + Q_\theta({}^{(a)}t) - Q_\theta(t^{(a)})$. Hence

$$\begin{aligned} &M_2(p_\theta) + Q_\theta\left(t^{(a)}\right) M_2\left(t^{(a)}\right) + Q_\theta\left({}^{(a)}t\right) M_2\left({}^{(a)}t\right) \\ &= M_1(p_\theta) + Q_\theta\left({}^{(a)}t\right) - Q_\theta\left(t^{(a)}\right) + Q_\theta\left(t^{(a)}\right)\left(M_1\left(t^{(a)}\right) + 1\right) \\ &\quad + Q_\theta\left({}^{(a)}t\right)\left(M_1\left({}^{(a)}t\right) - 1\right) \\ &= M_1(p_\theta) + Q_\theta\left(t^{(a)}\right) M_1\left(t^{(a)}\right) + Q_\theta\left({}^{(a)}t\right) M_1\left({}^{(a)}t\right). \end{aligned}$$

In addition for each $p \in P_A \backslash \{{}^{(a)}t, t^{(a)}\}$, $M_1(p) = M_2(p)$ and $Q_\theta(p) M_2(p) = Q_\theta(p) M_1(p)$.

Case 3: $t \notin K_\theta \cup L_\theta$. Then there are three subcases: $t \in P_0^\bullet$ and $Q_\theta(t^{(a)}) = 0$, $t \in P_A \backslash \{P_0^\bullet \cup^\bullet P_0\}$ and $Q_\theta(t^{(a)}) = Q_\theta({}^{(a)}t)$, or $t \in^\bullet P_0$. In all of them, it is clear that $\Sigma_{p \in P} Q_\theta(p) M_2(p) = \Sigma_{p \in P} Q_\theta(p) M_1(p)$. Also, by Definition 9, since no arc exists between t and p_θ, we have $M_2(p_\theta) = M_1(p_\theta)$.

In all the above cases, $\Sigma_{p \in P_A} Q_\theta(p) M_2(p) + M_2(p_\theta) = \Sigma_{p \in P_A} Q_\theta(p) M_1(p) + M_1(p_\theta) = M_{\Gamma 0}(p_\theta)$, i.e., (15) holds at M_2. By the mathematical induction, we can say (15) holds at any reachable marking of $(CN_\Gamma, M_{\Gamma 0})$.

Appendix B
Proof of Lemma 8

Let $M \in R(CN_\Gamma, M_{\Gamma 0})$. For any PRT-circuit $\theta \in \Gamma$, since $W(p) = W_\theta(p)$ for $p \in P[\theta]$, we have

$$\Sigma_{p \in P[\theta]} W(p) M(p) = \Sigma_{p \in P[\theta]} W_\theta(p) M(p). \tag{16}$$

Also, since $0 < W_\theta(p) \leq Q_\theta(p)$ for each $p \in P[\theta]$, $P[\theta] \subseteq P_A$, and $Q_\theta(p) \geq 0$ for each $p \in P_A$, we obtain

$$\begin{aligned} \Sigma_{p \in P[\theta]} W_\theta(p) M(p) &\leq \Sigma_{p \in P[\theta]} Q_\theta(p) M(p) \\ &\leq \Sigma_{p \in P_A} Q_\theta(p) M(p). \end{aligned} \tag{17}$$

By combining (16) and (17), we have $\Sigma_{p \in P[\theta]} W(p) M(p) \leq \Sigma_{p \in P_A} Q_\theta(p) M(p)$. On the other hand, by Lemma 7, $\Sigma_{p \in P_A} Q_\theta(p) M(p) \leq M_\Gamma(p_\theta) = X(\theta) - \rho_\theta \leq X(\theta) - 1$. Thus

$$\Sigma_{p \in P[\theta]} W(p) M(p) \leq X(\theta) - 1. \tag{18}$$

That is, the number of resources occupied in $P[\theta]$ at M is less than $X(\theta)$, by Lemma 4, θ is not saturated at M.

Now we shall prove each $\alpha \in \Xi \backslash \Gamma$ is not saturated at M, either. Note that there exists $\Gamma(\alpha) \in \Pi(\Gamma)$ such that $\Gamma(\alpha)$ is an effective transition cover of α. That is, $\Im[\alpha] \subseteq \cup_{\theta \in \Gamma(\alpha)} \Im[\theta]$; hence $P[\alpha] \subseteq \cup_{\theta \in \Gamma(\alpha)} P[\theta]$ and

$$\Sigma_{p \in P[\alpha]} W(p) M(p) \leq \Sigma_{\theta \in \Gamma(\alpha)} \Sigma_{p \in P[\theta]} W(p) M(p). \tag{19}$$

In addition, $\forall \theta \in \Gamma(\alpha) \subseteq \Gamma$, according to (16) and (17), $\Sigma_{p \in P[\theta]} W(p) M(p) \leq \Sigma_{p \in P[\theta]} Q_\theta(p) M(p)$. Invoking this inequality into the right-hand-side of (19), we obtain

$$\Sigma_{p \in P[\alpha]} W(p) M(p) \leq \Sigma_{\theta \in \Gamma(\alpha)} \Sigma_{p \in P[\theta]} Q_\theta(p) M(p). \tag{20}$$

On the other hand, since $P[\theta] = \Delta_\theta \backslash A_\theta$, we have

$$\Sigma_{p \in P[\theta]} Q_\theta(p) M(p) = \Sigma_{p \in \Delta\theta} Q_\theta(p) M(p) - \Sigma_{p \in A\theta} Q_\theta(p) M(p). \tag{21}$$

Authorized licensed use limited to: Chulalongkorn University provided by UniNet. Downloaded on March 08,2026 at 05:25:48 UTC from IEEE Xplore. Restrictions apply.

By Lemma 5, $\Delta_\theta = \{p \in P_A | Q_\theta(p) > 0\}$. Hence, $\Sigma_{p\in\Delta\theta} Q_\theta(p)M(p) = \Sigma_{p\in P_A} Q_\theta(p)M(p)$. After invoking this equation into the right-hand-side of (21), we obtain

$$\Sigma_{p\in P[\theta]} Q_\theta(p)M(p) = \Sigma_{p\in P_A} Q_\theta(p)M(p) - \Sigma_{p\in A\theta} Q_\theta(p)M(p). \tag{22}$$

Further, invoking (22) into the right-hand-side of (20), we have

$$\begin{aligned}&\Sigma_{p\in P[\alpha]} W(p)M(p)\\ &\le \Sigma_{\theta\in\Gamma(\alpha)}\big(\Sigma_{p\in P_A} Q_\theta(p)M(p) - \Sigma_{p\in A\theta} Q_\theta(p)M(p)\big)\\ &= \Sigma_{\theta\in\Gamma(\alpha)}\Sigma_{p\in P_A} Q_\theta(p)M(p) - \Sigma_{\theta\in\Gamma(\alpha)}\Sigma_{p\in A\theta} Q_\theta(p)M(p).\end{aligned} \tag{23}$$

For any $\theta \in \Gamma(\alpha) \subseteq \Gamma$, by Lemma 7, $\Sigma_{p\in P_A} Q_\theta(p)M(p) \le M_{\Gamma 0}(p_\theta) = X(\theta) - \rho_\theta$. Hence, (23) can be rewritten as

$$\begin{aligned}\Sigma_{p\in P[\alpha]} W(p)M(p) \le\ & \Sigma_{\theta\in\Gamma(\alpha)}(X(\theta) - \rho_\theta)\\ & - \Sigma_{\theta\in\Gamma(\alpha)}\Sigma_{p\in A\theta} Q_\theta(p)M(p).\end{aligned} \tag{24}$$

By Lemma 5, $Q_\theta(p) \ge 1$ for each $p \in A_\theta \subseteq \Delta_\theta$, then $\Sigma_{\theta\in\Gamma(\alpha)}\Sigma_{p\in A\theta} Q_\theta(p)M(p) \ge \Sigma_{\theta\in\Gamma(\alpha)}\Sigma_{p\in A\theta} M(p) = \Sigma_{\theta\in\Gamma(\alpha)} M(A_\theta)$. Further, $\Sigma_{\theta\in\Gamma(\alpha)} M(A_\theta) \ge M(A_{\Gamma(\alpha)})$ since $A_{\Gamma(\alpha)} = \cup_{\theta\in\Gamma(\alpha)} A_\theta$. Hence, $\Sigma_{\theta\in\Gamma(\alpha)}\Sigma_{p\in A\theta} Q_\theta(p)M(p) \ge M(A_{\Gamma(\alpha)})$. Invoking this inequality into the right-hand-side of (24), we obtain

$$\Sigma_{p\in P[\alpha]} W(p)M(p) \le \Sigma_{\theta\in\Gamma(\alpha)}(X(\theta) - \rho_\theta) - M\big(A_{\Gamma(\alpha)}\big). \tag{25}$$

Meanwhile, since $\Sigma_{\theta\in\Gamma(\alpha)}\rho_\theta$ satisfies (14), we have $\Sigma_{\theta\in\Gamma(\alpha)}(X(\theta) - \rho_\theta) \le X(\alpha) - 1 + k_{\Gamma(\alpha)}$. Combining this inequality with (25), we obtain

$$\Sigma_{p\in P[\alpha]} W(p)M(p) \le X(\alpha) - 1 + k_{\Gamma(\alpha)} - M\big(A_{\Gamma(\alpha)}\big). \tag{26}$$

Herein, there are two cases to be considered.

1) $M(A_{\Gamma(\alpha)}) < k_{\Gamma(\alpha)}$. Since $B_{\Gamma(\alpha)} \subseteq A_{\Gamma(\alpha)}$, we have $M(B_{\Gamma(\alpha)}) \le M(A_{\Gamma(\alpha)}) < k_{\Gamma(\alpha)}$. We can claim that α is not saturated at M. To see this, assume, on the contrary, that α is saturated at M. Then each place in $P[\alpha]$ is marked at M. Since $B_{\Gamma(\alpha)} \subseteq P[\alpha]$, each place in $B_{\Gamma(\alpha)}$ is marked at M, too. Hence we have $M(B_{\Gamma(\alpha)}) \ge |B_{\Gamma(\alpha)}| = k_{\Gamma(\alpha)}$. This contradicts with $M(B_{\Gamma(\alpha)}) < k_{\Gamma(\alpha)}$.
2) $M(A_{\Gamma(\alpha)}) \ge k_{\Gamma(\alpha)}$. Then (26) implies that $\Sigma_{p\in P[\alpha]} W(p)M(p) \le X(\alpha) - 1$, i.e., the number of resources occupied in $P[\alpha]$ at M is less than $X(\alpha)$. Then by Lemma 4, α is not saturated at M.

Therefore, no PRT-circuit in Ξ can be saturated at any reachable marking of $(CN_\Gamma, M_{\Gamma 0})$.

REFERENCES

[1] Z. A. Banaszak and B. H. Krogh, "Deadlock avoidance in flexible manufacturing systems with concurrently competing process flows," *IEEE Trans. Robot. Autom.*, vol. 6, no. 6, pp. 724–734, Dec. 1990.

[2] K. Barkaoui and J.-F. Pradat-Peyre, "On liveness and controlled siphons in Petri nets," in *Proc. 17th Int. Conf. Appl. Theory Petri Nets*, vol. 1091. Osaka, Japan, 1996, pp. 57–72.

[3] D. Y. Chao, "Max'-controlled siphons for liveness of S^3PGR^3," *IET Control Theory Appl.*, vol. 1, no. 4, pp. 933–936, Jul. 2007.

[4] J. Campos, C. Seatzu, and X. Xie, *Formal Methods in Manufacturing*. Boca Raton, FL, USA: CRC Press, 2014.

[5] J. Ezpeleta, J. M. Colom, and J. Martinez, "A Petri net based deadlock prevention policy for flexible manufacturing systems," *IEEE Trans. Robot. Autom.*, vol. 11, no. 2, pp. 173–184, Apr. 1995.

[6] F. Chu and X.-L. Xie, "Deadlock analysis of Petri nets using siphons and mathematical programming," *IEEE Trans. Robot. Autom.*, vol. 13, no. 6, pp. 793–804, Dec. 1997.

[7] M. P. Fanti, B. Maione, and B. Turchiano, "Comparing digraph and Petri net approaches to deadlock avoidance in FMS," *IEEE Trans. Syst., Man, Cybern. B, Cybern.*, vol. 30, no. 5, pp. 783–798, Oct. 2000.

[8] M. P. Fanti and M. Zhou, "Deadlock control methods in automated manufacturing systems," *IEEE Trans. Syst., Man, Cybern. A, Syst., Humans*, vol. 34, no. 1, pp. 5–22, Jan. 2004.

[9] Y. Feng, K. Xing, Z. Gao, and Y. Wu, "Transition cover-based robust Petri net controllers for automated manufacturing systems with a type of unreliable resources," *IEEE Trans. Syst., Man, Cybern., Syst.*, vol. 47, no. 11, pp. 3019–3029, Nov. 2017.

[10] Y. Huang, M. Jeng, X. Xie, and S. Chung, "Deadlock prevention policy based on Petri nets and siphons," *Int. J. Prod. Res.*, vol. 39, no. 2, pp. 283–305, Jan. 2001.

[11] H. Hu and Y. Liu, "Supervisor simplification for AMS based on Petri nets and inequality analysis," *IEEE Trans. Autom. Sci. Eng.*, vol. 11, no. 1, pp. 66–77, Jan. 2014.

[12] H. Hu, Y. Liu, and M. Zhou, "Maximally permissive distributed control of large scale automated manufacturing systems modeled with Petri nets," *IEEE Trans. Control Syst. Technol.*, vol. 23, no. 5, pp. 2026–2034, Sep. 2015.

[13] H. Hu, Y. Liu, and L. Yuan, "Supervisor simplification in FMSs: Comparative studies and new results using Petri nets," *IEEE Trans. Control Syst. Technol.*, vol. 24, no. 1, pp. 81–95, Jan. 2016.

[14] M. D. Jeng, "A Petri net synthesis theory for modeling flexible manufacturing systems," *IEEE Trans. Syst., Man, Cybern. B, Cybern.*, vol. 27, no. 2, pp. 169–183, Apr. 1997.

[15] M. A. Lawley, S. A. Reveliotis, and P. M. Ferreira, "A correct and scalable deadlock avoidance policy for flexible manufacturing systems," *IEEE Trans. Robot. Autom.*, vol. 14, no. 5, pp. 796–809, Oct. 1998.

[16] Z. Li and M. Zhou, "Elementary siphons of Petri nets and their application to deadlock prevention in flexible manufacturing systems," *IEEE Trans. Syst., Man, Cybern. A, Syst., Humans*, vol. 34, no. 1, pp. 38–51, Jan. 2004.

[17] Z. Li, J. Zhang, and M. Zhao, "Liveness-enforcing supervisor design for a class of generalised petri net models of flexible manufacturing systems," *IET Control Theory Appl.*, vol. 1, no. 4, pp. 955–967, Jul. 2007.

[18] D. Liu, Z. Li, and M. Zhou, "Liveness of an extended S^3PR," *Automatica*, vol. 46, no. 6, pp. 1008–1018, Jun. 2010.

[19] H. Liu, K. Xing, M. Zhou, L. Han, and F. Wang, "Transition cover-based design of Petri net controllers for automated manufacturing systems," *IEEE Trans. Syst., Man, Cybern., Syst.*, vol. 44, no. 2, pp. 196–208, Feb. 2014.

[20] H. Liu, K. Xing, W. Wu, M. Zhou, and H. Zou, "Deadlock prevention for flexible manufacturing systems via controllable siphon basis of Petri nets," *IEEE Trans. Syst., Man, Cybern., Syst.*, vol. 45, no. 3, pp. 519–529, Mar. 2015.

[21] G. Y. Liu, Z. W. Li, K. Barkaoui, and A. M. Al-Ahmari, "Robustness of deadlock control for a class of Petri nets with unreliable resources," *Inf. Sci.*, vol. 235, no. 6, pp. 259–279, Jun. 2013.

[22] X. Lu, M. Zhou, A. C. Ammari, and J. Ji, "Hybrid Petri nets for modeling and analysis of microgrid systems," *IEEE/CAA J. Autom. Sinica*, vol. 3, no. 4, pp. 347–354, Oct. 2016.

[23] L. Piroddi, R. Cordone, and I. Fumagalli, "Selective siphon control for deadlock prevention in Petri nets," *IEEE Trans. Syst., Man, Cybern. A, Syst., Humans*, vol. 38, no. 6, pp. 1337–1348, Nov. 2008.

[24] N. Ran, H. Su, and S. Wang, "An improved approach to test diagnosability of bounded Petri nets," *IEEE/CAA J. Autom. Sinica*, vol. 4, no. 2, pp. 297–303, Apr. 2017.

[25] F. Tricas, F. Garcia-Valles, J. M. Colom, and J. Ezpeleta, "A Petri net structure-based deadlock prevention solution for sequential resource allocation systems," in *Proc. Int. Conf. Robot. Autom. (ICRA)*, Barcelona, Spain, Apr. 2005, pp. 272–278.

[26] M. Uzam and M. Zhou, "An iterative synthesis approach to Petri net-based deadlock prevention policy for flexible manufacturing systems," *IEEE Trans. Syst., Man, Cybern. A, Syst., Humans*, vol. 37, no. 3, pp. 362–371, May 2007.

[27] N. N. Wu and M. Zhou, *System Modeling and Control With Resource-Oriented Petri Nets*. New York, NY, USA: CRC Press, 2010.

Authorized licensed use limited to: Chulalongkorn University provided by UniNet. Downloaded on March 08,2026 at 05:25:48 UTC from IEEE Xplore. Restrictions apply.

[28] Y. Wu, K. Xing, J. Luo, and Y. Feng, "Robust deadlock control for automated manufacturing systems with an unreliable resource," *Inf. Sci.*, vols. 346–347, pp. 17–28, Jun. 2016.

[29] S. Wang, C. Wang, and M. Zhou, "Controllability conditions of resultant siphons in a class of Petri nets," *IEEE Trans. Syst., Man, Cybern. A, Syst., Humans*, vol. 42, no. 5, pp. 1206–1215, Sep. 2012.

[30] S. Wang and M. Liu "Comments on 'liveness of an extended S^3PR' [automatica 46(6) (2010) 1008–1018]," *Automatica*, vol. 50, no. 8, pp. 2199–2200, Aug. 2014.

[31] F. Wang, K.-Y. Xing, M.-C. Zhou, X.-P. Xu, and L.-B. Han, "A robust deadlock prevention control for automated manufacturing systems with unreliable resources," *Inf. Sci.*, vol. 345, pp. 243–256, Jun. 2016.

[32] K. Xing, M. Zhou, H. Liu, and F. Tian, "Optimal Petri-net-based polynomial-complexity deadlock-avoidance policies for automated manufacturing systems," *IEEE Trans. Syst., Man, Cybern. A, Syst., Humans*, vol. 39, no. 1, pp. 188–199, Jan. 2009.

[33] K. Xing, M. Zhou, F. Wang, H. Liu, and F. Tian, "Resource-transition circuits and siphons for deadlock control of automated manufacturing systems," *IEEE Trans. Syst., Man, Cybern. A, Syst., Humans*, vol. 41, no. 1, pp. 74–84, Jan. 2011.

[34] K. Xing, L. Han, M. Zhou, and F. Wang, "Deadlock-free genetic scheduling algorithm for automated manufacturing systems based on deadlock control policy," *IEEE Trans. Syst., Man, Cybern. B, Cybern.*, vol. 42, no. 3, pp. 603–615, Jun. 2012.

[35] C. Zhong and Z. Li, "Self-liveness of a class of Petri net models for flexible manufacturing Systems," *IET Control Theory Appl.*, vol. 4, no. 3, pp. 403–410, Mar. 2010.

[36] M. Zhou, F. DiCesare, and A. A. Desrochers, "A hybrid methodology for synthesis of Petri net models for manufacturing systems," *IEEE Trans. Robot. Autom.*, vol. 8, no. 3, pp. 350–361, Jun. 1992.

[37] M. C. Zhou and K. Venkatesh, *Modeling, Simulation and Control of Flexible Manufacturing Systems: A Petri Net Approach*. Singapore: World Sci., 1998.

[38] M. C. Zhou and F. DiCesare, *Petri Net Synthesis for Discrete Event Control of Manufacturing Systems*. London, U.K.: Kluwer Acad., 1993.

[39] M. C. Zhou and M. D. Jeng, "Modeling, analysis, simulation, scheduling, and control of semiconductor manufacturing systems: A Petri net approach," *IEEE Trans. Semicond. Manuf.*, vol. 11, no. 3, pp. 333–357, Aug. 1998.

[40] M. C. Zhou, H.-X. Li, and M. Weijnen, *Contemporary Issues in Systems Science and Engineering*. Hoboken, NJ, USA: Wiley, 2015.

[41] Q. Zhu, N. Q. Wu, Y. Qiao, and M. C. Zhou, "Scheduling of single-arm multi-cluster tools with wafer residency time constraints in semiconductor manufacturing," *IEEE Trans. Semicond. Manuf.*, vol. 28, no. 1, pp. 117–125, Feb. 2015.

[42] Q. Zhu, N. Q. Wu, Y. Qiao, and M. C. Zhou, "Optimal scheduling of complex multi-cluster tools based on timed resource-oriented Petri nets," *IEEE Access*, vol. 4, pp. 2096–2109, 2016.

[43] Q. Zhu, N. Wu, Y. Qiao, and M. C. Zhou, "Petri net-based optimal one-wafer scheduling of single-arm multi-cluster tools in semiconductor manufacturing," *IEEE Trans. Semicond. Manuf.*, vol. 26, no. 4, pp. 578–591, Dec. 2013.

[44] R. Zurawski and M. C. Zhou, "Petri nets and industrial applications: A tutorial," *IEEE Trans. Ind. Electron.*, vol. 41, no. 6, pp. 567–583, Dec. 1994.

[45] E. Zussman and M. C. Zhou, "A methodology for modeling and adaptive planning of disassembly processes," *IEEE Trans. Robot. Autom.*, vol. 15, no. 1, pp. 190–194, Feb. 1999.

[46] E. Zussman and M. C. Zhou, "Design and implementation of an adaptive planner for disassembly processes," *IEEE Trans. Robot. Autom.*, vol. 16, no. 2, pp. 171–179, Apr. 2000.

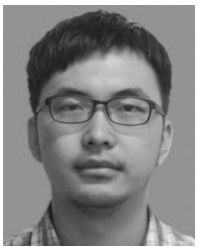

Yanxiang Feng received the B.S. degree in automation science and technology and the Ph.D. degree in systems engineering from Xi'an Jiaotong University, Xi'an, China, in 2010 and 2017, respectively.

He is currently with the State Key Laboratory for Manufacturing Systems Engineering, Xi'an Jiaotong University. His current research interests include Petri net, discrete event systems, and robust control.

Keyi Xing received the B.S. degree in mathematics from Northwest University, Xi'an, China, in 1982, the M.S. degree in applied mathematics from Xidian University, Xi'an, in 1985, and the Ph.D. degree in systems engineering from Xi'an Jiaotong University, Xi'an, in 1994.

He was with Xidian University in 1985. Since 2004, he has been with Xi'an Jiaotong University, where he is currently a Professor of systems engineering with the State Key Laboratory for Manufacturing Systems Engineering and with the Systems Engineering Institute. His current research interests include control and scheduling of automated manufacturing, discrete-event, and hybrid systems.

MengChu Zhou (S'88–M'90–SM'93–F'03) received the B.S. degree in control engineering from the Nanjing University of Science and Technology, Nanjing, China, in 1983, the M.S. degree in automatic control from the Beijing Institute of Technology, Beijing, China, in 1986, and the Ph.D. degree in computer and systems engineering from Rensselaer Polytechnic Institute, Troy, NY, USA, in 1990.

He joined the New Jersey Institute of Technology, Newark, NJ, USA, in 1990, where he is currently a Distinguished Professor of electrical and computer engineering. He has over 700 publications, including 12 books, 400+ journal papers (over 290 in the IEEE TRANSACTIONS), and 28 book-chapters. His has co-authored/edited the books entitled *Business and Scientific Workflows: A Web Service-Oriented Approach* (NJ, USA: IEEE/Wiley, 2013) (with W. Tan) and *Contemporary Issues in Systems Science and Engineering* (NJ, USA: IEEE/Wiley, 2015) (with H.-X. Li and M. Weijnen). His current research interests include Petri nets, Internet of Things, big data, Web services, manufacturing, transportation, and energy systems.

Dr. Zhou was a recipient of the CIM University-LEAD Award by Society of Manufacturing Engineers, the Perlis Research Award, and the Fenster Innovation in Engineering Education Award by NJIT, the Humboldt Research Award for U.S. Senior Scientists, the Franklin V. Taylor Memorial Award, and the Norbert Wiener Award from the IEEE Systems, Man and Cybernetics Society. He has been among most highly cited scholars for years and ranked top one in the field of engineering worldwide in 2012 by Web of Science/Thomson Reuters. He is the Founding Editor of the IEEE Press Book Series on Systems Science and Engineering. He served as an Associate Editor for the IEEE TRANSACTIONS ON ROBOTICS AND AUTOMATION, the IEEE TRANSACTIONS ON AUTOMATION SCIENCE AND ENGINEERING, the IEEE TRANSACTIONS ON SYSTEMS, MAN AND CYBERNETICS: SYSTEMS, and the IEEE TRANSACTIONS ON INDUSTRIAL INFORMATICS, and an Editor of the IEEE TRANSACTIONS ON AUTOMATION SCIENCE AND ENGINEERING. He is an Associate Editor of the IEEE TRANSACTIONS ON INTELLIGENT TRANSPORTATION SYSTEMS, *IEEE/CAA Journal of Automatica Sinica*, and *Frontiers of Information Technology & Electronic Engineering*. He served as a Guest-Editor for many journals, including the IEEE INTERNET OF THINGS JOURNAL, the IEEE TRANSACTIONS ON INDUSTRIAL ELECTRONICS, and the IEEE TRANSACTIONS ON SEMICONDUCTOR MANUFACTURING. He is a Life Member of the Chinese Association for Science and Technology in USA and served as its President in 1999. He is a fellow of International Federation of Automatic Control, the American Association for the Advancement of Science, and Chinese Association of Automation.

Huixia Liu received the B.S. degree in applied mathematics from Dalian University, Dalian, China, in 2001, the M.S. degree in mathematics from the Harbin Institute of Technology, Harbin, China, in 2003, and the Ph.D. degree in systems engineering from Xi'an Jiaotong University, Xi'an, China, in 2012.

She has been a member of the School of Information and Electrical Engineering, Ludong University, Yantai, China, where she is an Associate Professor. Her current research interests include control and scheduling of automated manufacturing and Petri nets.

Authorized licensed use limited to: Chulalongkorn University provided by UniNet. Downloaded on March 08,2026 at 05:25:48 UTC from IEEE Xplore. Restrictions apply.