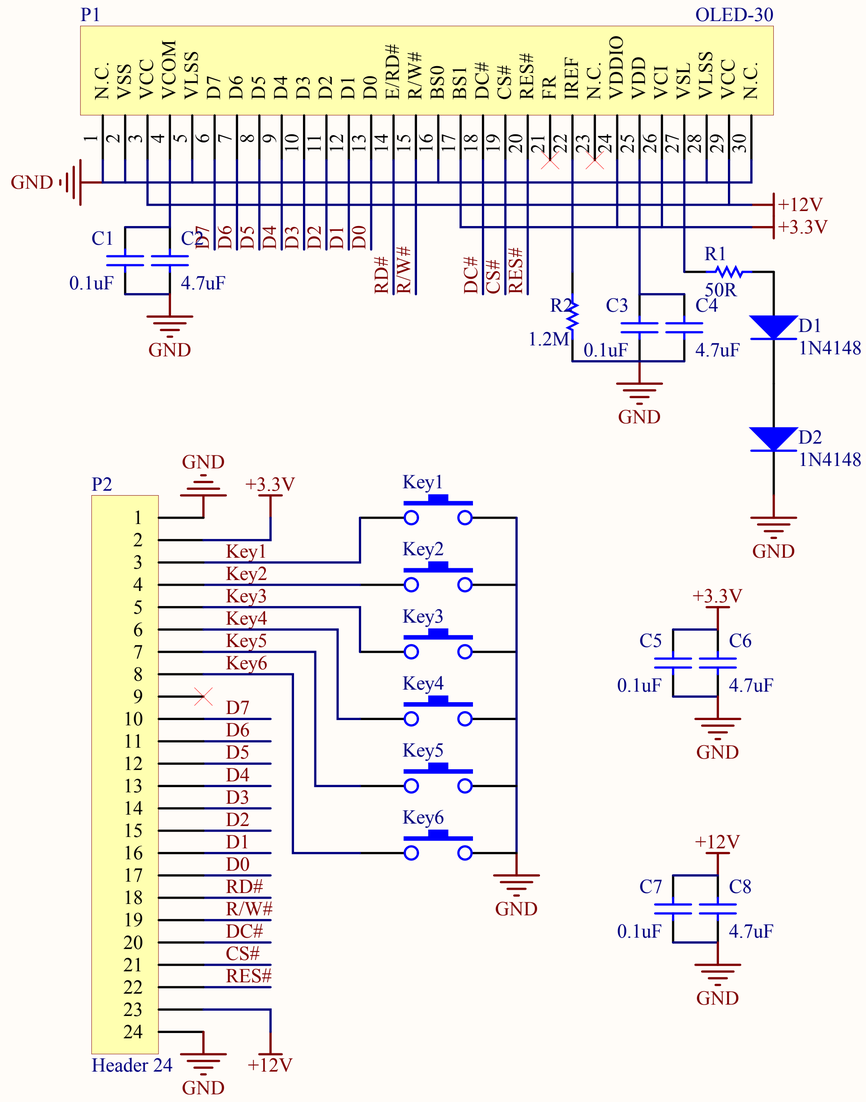

Title		
Size A4	Number	Revision
Date: 2011-3-23		Sheet of
File: D:\Work\..\AE1-display-key.SchDoc		Drawn By:

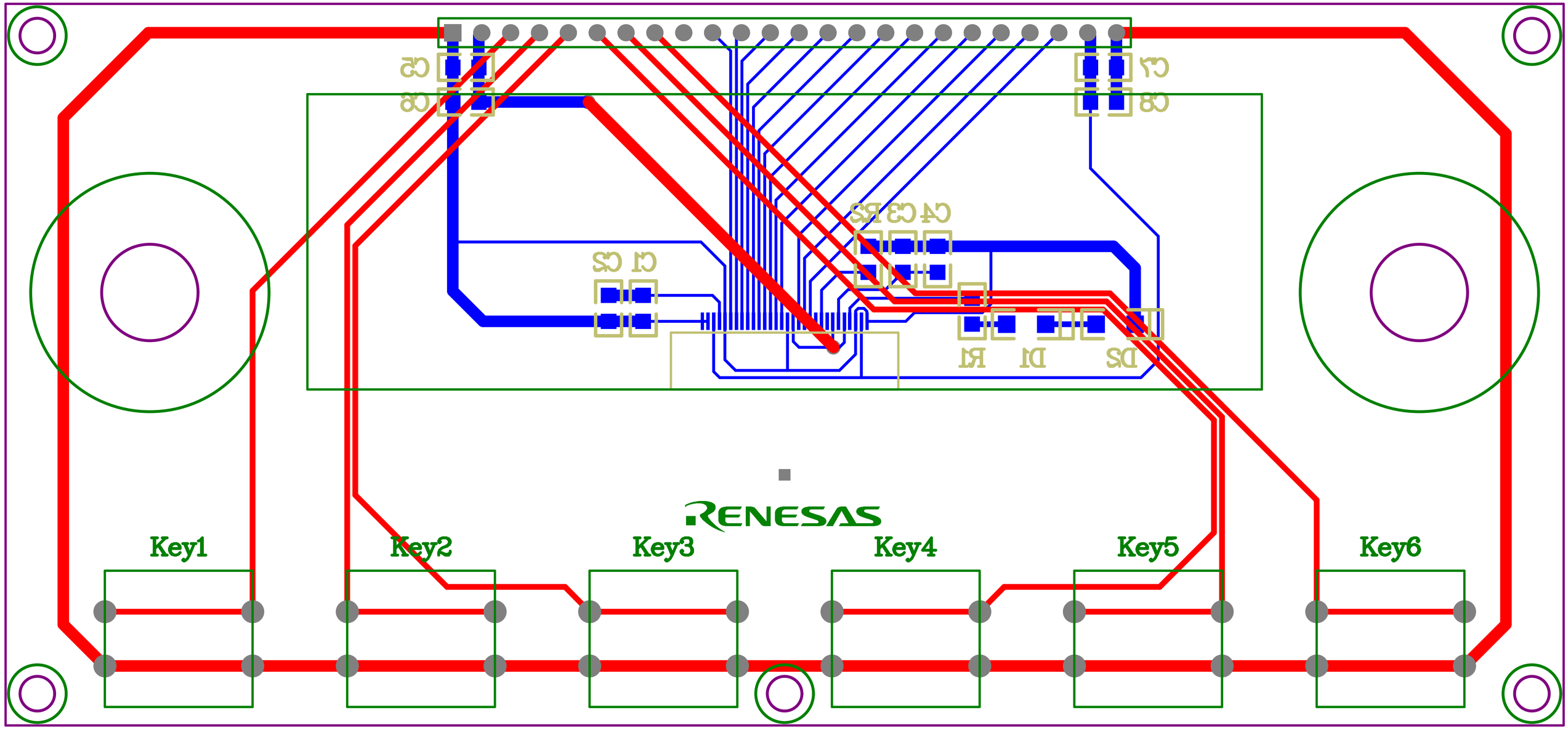
C5
C6
C7
C8
C4 C3 R2
C1 C2
R1
D1
D2
RENESAS
Key1
Key2
Key3
Key4
Key5
Key6