REV	BY	DATE	DESCRIPTION	ECO
B	[illegible]	1/15/75	DELETED TOL FOR .250 DIM (2 PL), REV'D TOL FOR .120 DIM, ADDED NOTE 1 & MAT'L NO., REV'D NOTE 4, DELETED NOTE 5	17590
C	[illegible]	6/18/75	DELETED TOL FOR .125 DIM. .430 DIM WAS .440	19479
D	[illegible]	3/24/76	ADDED NOTE 5, FINISH WAS 8/.	[illegible]
E	[illegible]	1/1/82	ADDED "REF" TO .125 DIMS (2 PLCS).	23138

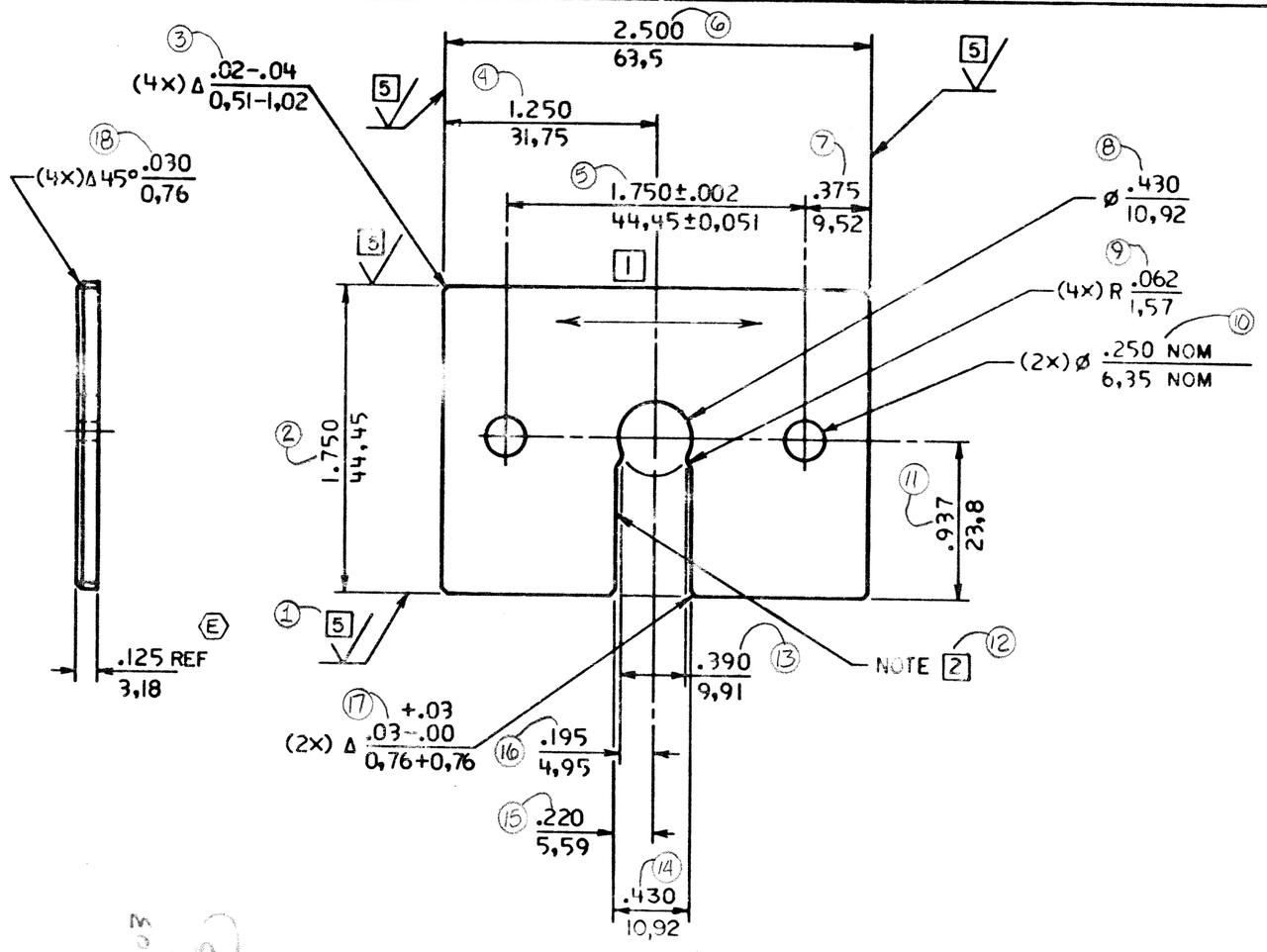

DETAIL A
ZONE C-8

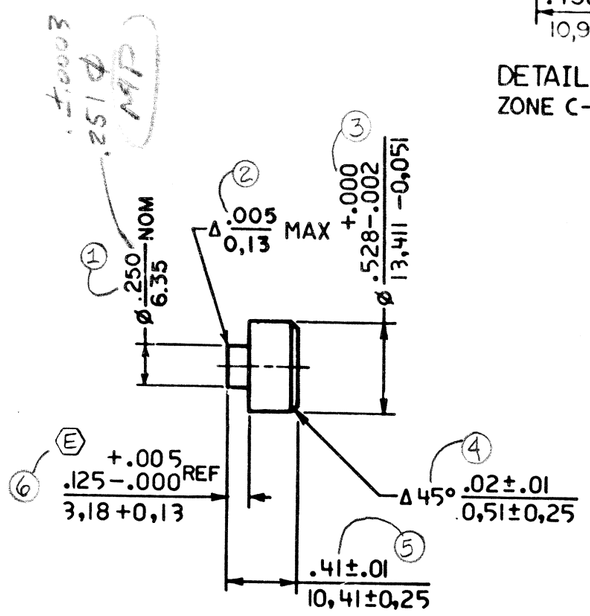

DETAIL B
ZONE C-6
(2X)

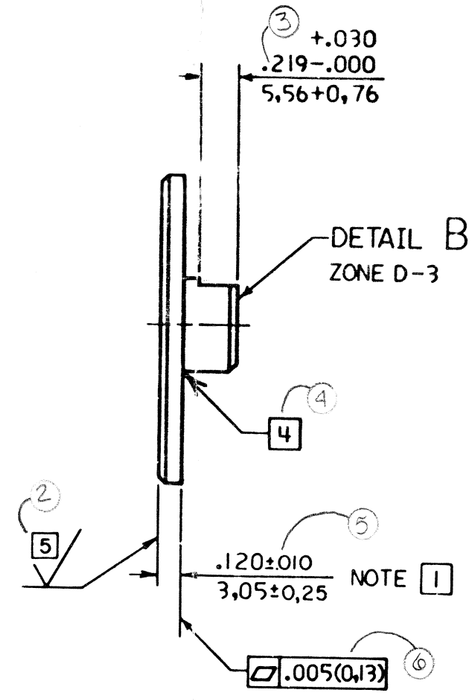

DETAIL B
ZONE D-3

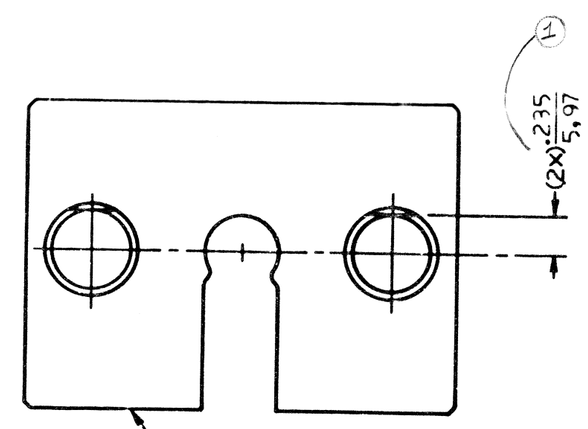

DETAIL A
ZONE C-4

NOTES

1. GRAIN DIRECTION
2. BREAK .015-.030 (0,38-0,76) ENTIRE AREA OF SLOT, TOP AND BOTTOM
3. NO EDGE BREAK PERMISSIBLE ON SIDE OF HOLE WITH 8/ FINISH
4. MUST WITHSTAND MIN. 50 IN LBS TORQUE
5. FINISH TO BE IN DIRECTION SHOWN 16/ TO 32/

MATERIAL	NO AISI 316		
STAINLESS STEEL			
MATL ALTERNATE	NO		
CASE DEPTH			
HARDNESS			
SURFACE TREATMENT			

SCALE 2/1

THIRD ANGLE PROJECTION

INCH / mm

MUST CONFORM TO ENG SPEC:

TOLERANCES UNLESS OTHERWISE NOTED		INCH	mm
LINEAR ±		.005	0,13
ANGLES ±		3°	
RADII UNLESS OTHERWISE NOTED			
EDGE/CORNER BREAKS	OUTSIDE MAX		
	INSIDE MAX		

COBE LABORATORIES, INC.
LAKEWOOD, COLORADO, U.S.A.

TITLE: PLATE, SEAL HOLDER, TOP

CHKD BY | DATE | ECO NO. 23138 | LATEST CHANGES | PART STATUS A

PART NO. 771801-691 | REV E | SHT 1/1

408

DATED PRINT 1-6-97