REV	REVISION DESCRIPTION	BY	DATE	ECO
A	ORIGINAL RELEASE	LC	9/21/90	52350

GENERAL SPECIFICATIONS FOR ANODIZED PART

1. COLOR: BLACK TYPE II PER MIL-A-8625C
2. PERFORMANCE CHARACTERISTICS
   - A. PURPOSE OF COATING
     - ■ DECORATIVE
     - ☐ CORROSION RESISTANCE
     - ☐ OTHER
   - B. CRITICAL PART SURFACES
     - ■ CLASS A APPLIES IN ALL PLACE(S). SEE NOTE
     - ☐ CLASS D APPLIES . NO COSMETIC REQUIREMENTS ON PART.
     - ☐ CLASS APPLIES IN PLACE(S). SEE NOTE
   - C. SEALING (IF UNSPECIFIED, SEAL WITH WATER)
     - ☐ OTHER SEALANT REQUIRED. SPECIFY:
3. PROCESS
   - A. RACKING POINTS (ANODIZER'S DISCRETION, UNLESS SPECIFIED)
     - ■ RACK ONLY WHERE SHOWN. SEE NOTE 4 AND (2B) ABOVE.
   - B. MASKING OF HOLES
     - ☐ DO NOT MASK.
     - ☐ MASKING REQUIRED IN PLACE(S). SEE NOTE
     - NOTE: GAUGES TO BE USED AFTER COATING, WHETHER MASKED OR NOT.
4. QC INSPECTION CRITERIA
   - A. ☐ SAMPLING PLAN ACCEPTABLE (AQL 1.5).

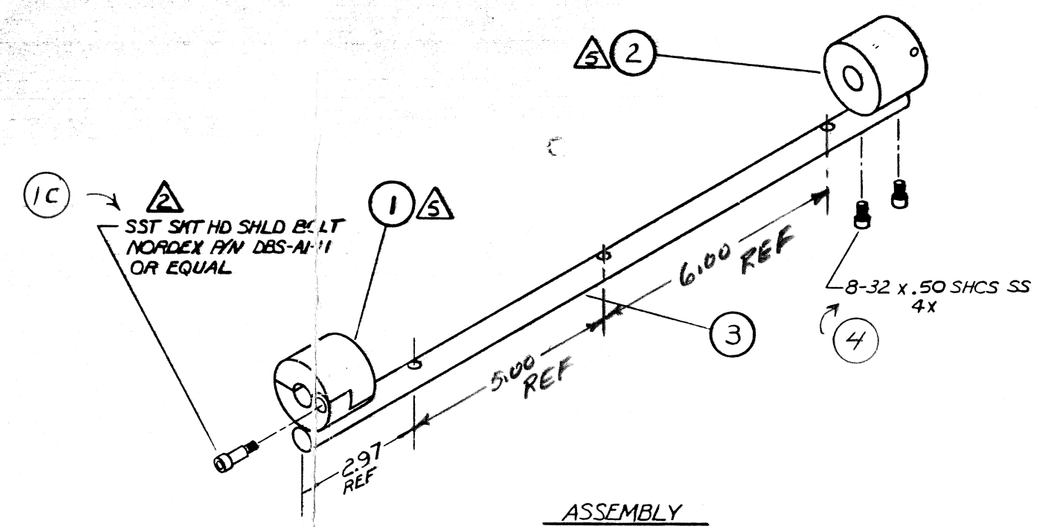

ASSEMBLY
NO SCALE

NOTES

1. BREAK ALL SHARP EDGES & CORNERS R.02 - .04
2. APPLY PERMANENT TYPE LOC-TITE TO SHOULDER BOLT AND TORQUE TO 2-4 in/lbs
3. ◆ INDICATES DIM TO BE CHECKED AT INCOMING QC.
4. RACK PARTS DURING ANODIZING IN ANY THRU HOLES OR AREAS INDICATED
5. CENTERLINES OF CLAMPS TO BE WITHIN ± 1°-0'

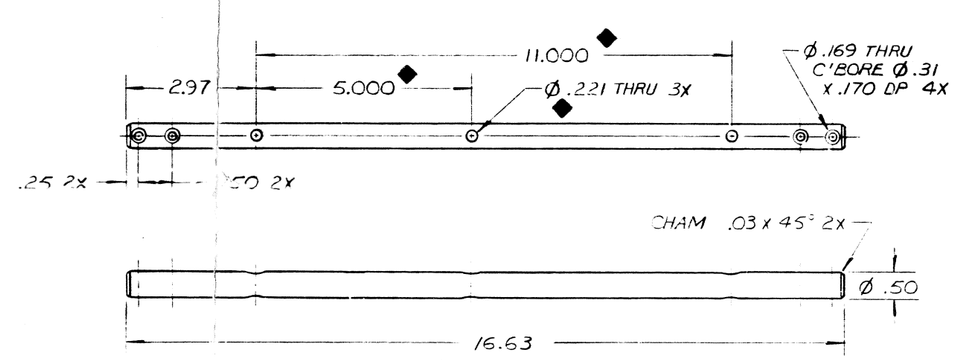

POLE (3)
SCALE 1/2

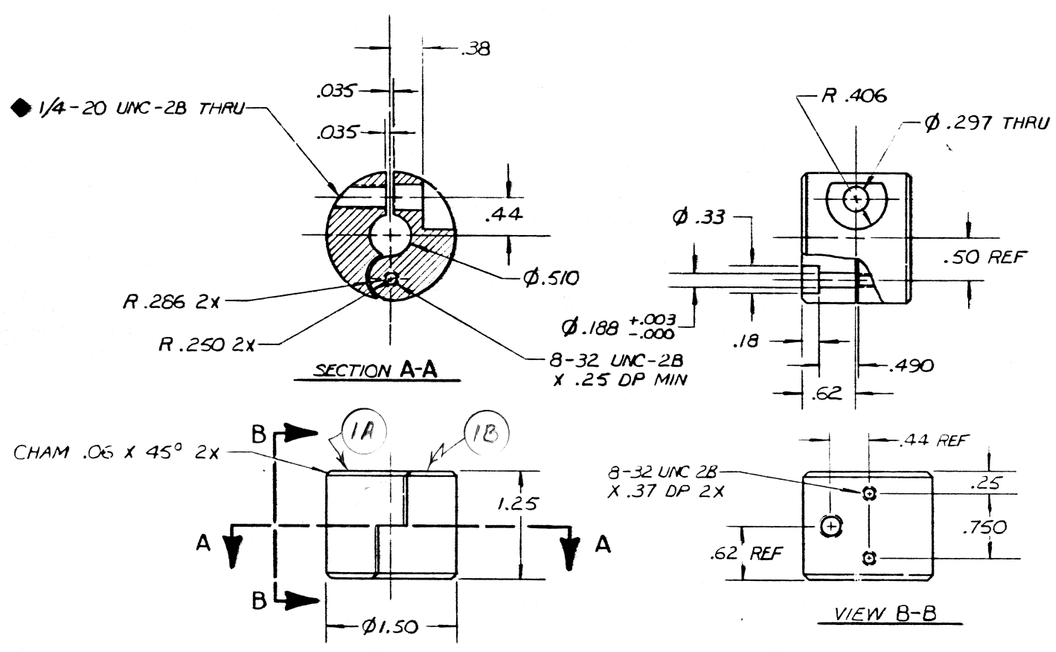

POLE CLAMP (1)

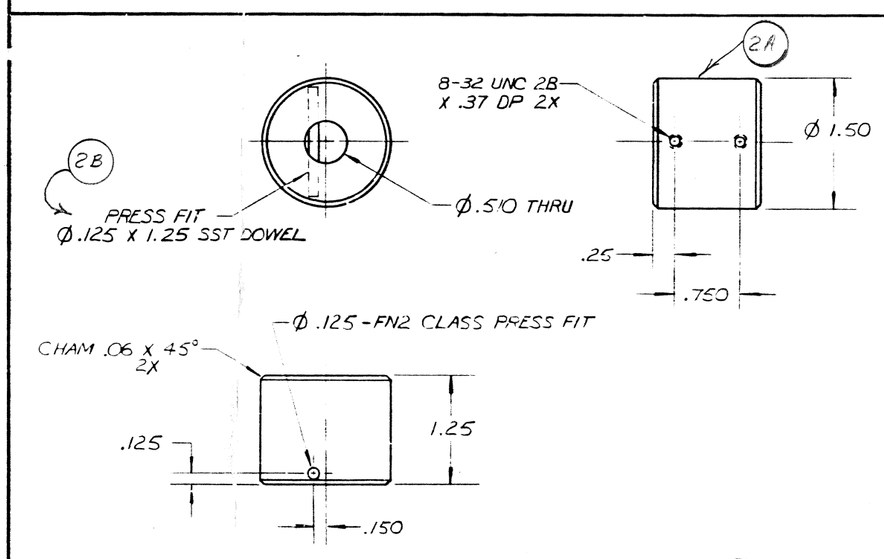

BOTTOM CLAMP (2)

THESE DRAWINGS AND SPECIFICATIONS ARE THE PROPERTY OF COBE LABORATORIES, INC. AND SHALL NOT BE REPRODUCED, COPIED, OR USED FOR MANUFACTURE OR SALE OF APPARATUS WITHOUT WRITTEN PERMISSION OF COBE LABORATORIES, INC.

TOLERANCES AND SYMBOLOGY PER ANSI Y14.5M-1982. DIMENSIONS SPECIFIED ARE AFTER ADDITIVE FINISH

X- ±
XX- ±.02
XXX- ±.005
XXXX- ±

ANGLES ± 2°

SURF FINISH 63 RMS

MATERIAL: ALUMINUM 6061-T6

CHECKED C. MOON DATE 3-90
DRAWN JCPES DATE 3/23/90

SIZE D | SCALE 1/1 | DO NOT SCALE DWG | SHEET SIZE: A

COBE COBE LABORATORIES, INC. LAKEWOOD, COLORADO, U.S.A.

TITLE: CLAMP ASSEMBLY

PART NO. 777067-2R2 | REV A | SHT 1 OF 1

DATED 9/3/08 ~~7/20/14~~
PRINT

458