REV	REVISION DESCRIPTION	BY	DATE	ECO
A	ORIGINAL RELEASE, REPLACES 777067-113	VLF	3/11/93	61275
B	.13 WAS .06 OF NOTE 3, .07 WAS .06 OF NOTE 4 ADDED DIM. .08 TO CLARIFY DEPTH OF CHAMFER	VLF	3/31/93	61314
C	ADDED 12L14 TO MATERIAL	VLF	11/27/95	BCT 000726

NOTES:

1. DEBURR OR BREAK ALL EDGES, .020 MAX.
2. FINISH: YELLOW ZINC
3. △3 SHARP TO R .13 MAX.
4. △4 .07 UNDERCUT RELIEF PERMISSABLE AT THE BOTTOM OF 18°/10° ANGLE. CONFIGURATION CAN VARY.
5. ◆ INDICATES KEY DIM. TO BE CHECKED AT INCOMING Q.C.

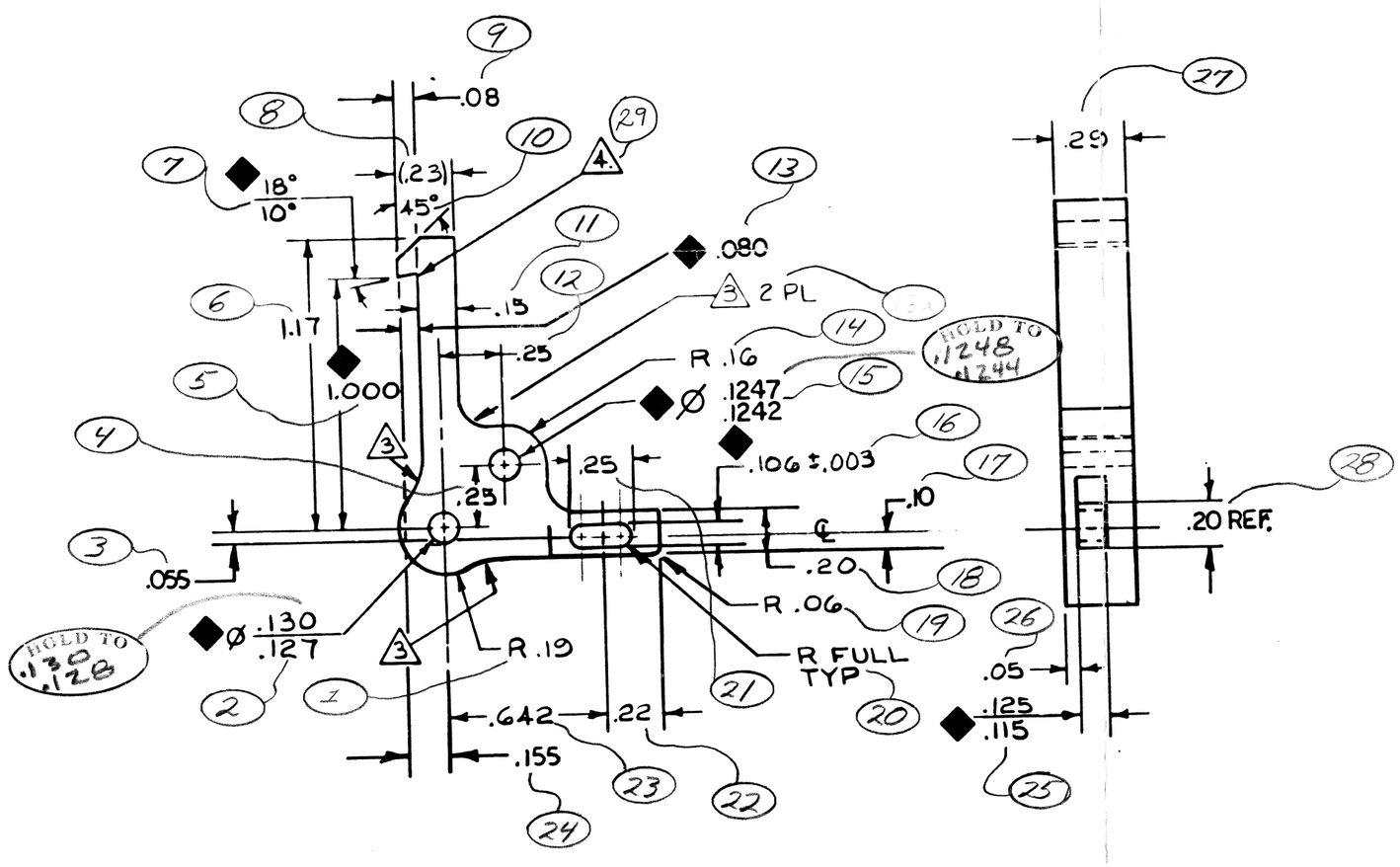

Dated Print 11-14-07

THESE DRAWINGS AND SPECIFICATIONS ARE THE PROPERTY OF COBE LABORATORIES INC AND SHALL NOT BE REPRODUCED COPIED OR USED FOR MANUFACTURE OR SALE OF APPARATUS WITHOUT WRITTEN PERMISSION OF COBE LABORATORIES INC

TOLERANCES AND SYMBOLOGY PER ANSI Y14.5M-1982
DIMENSIONS SPECIFIED ARE AFTER ADDITIVE FINISH

X± ; XX± .02 ; XXX± .010 ; XXXX±

ANGLES 5°

SURF FINISH 125

MATERIAL: 1010-1025, 12L14

CHECKED: M 2 — DATE 9/3/87

DRAWN: T Younger — DATE 9/3/87

SIZE C | SCALE 2 X | DO NOT SCALE DWG | THIRD ANGLE PROJECTION

COBE BCT
COBE BCT, Inc.
Blood Component Technology
1201 Oak Street Lakewood, CO 80215-4407 USA a gambro company

TITLE: LEVER, TRIP L.H.

PART NO 777067-495 | REV C | SHT 1 OF 1

TELEDYNE POST N87901

408