NOTES :

1. ! INDICATES KEY FEATURES TO BE VERIFIED BY INCOMING Q.C.

2. APPLY CHROMATE CONVERSION COATING PER MIL-DTL-5541F, TYPE II (ROHS COMPLIANT, NON-HEXAVALENT), CLASS 3. CERTIFICATE OF COMPLIANCE TO BE PROVIDED.

3. BREAK ALL SHARP EDGES AND CORNERS.

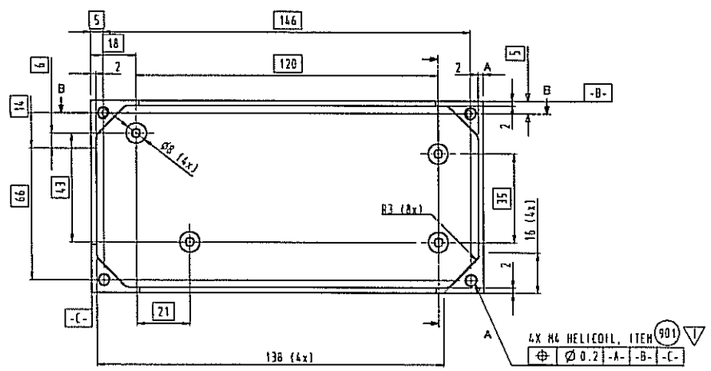

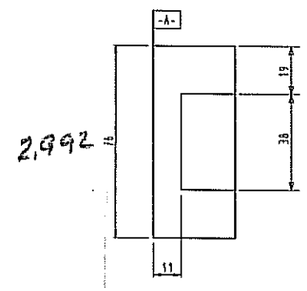

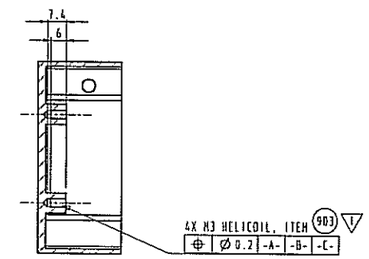

Section A--A

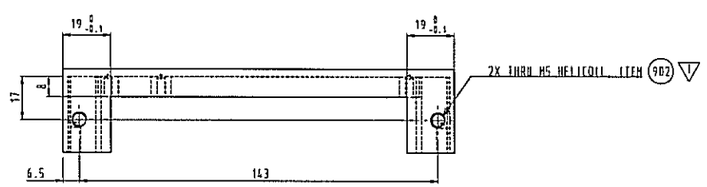

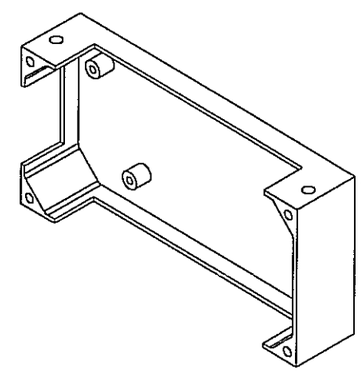

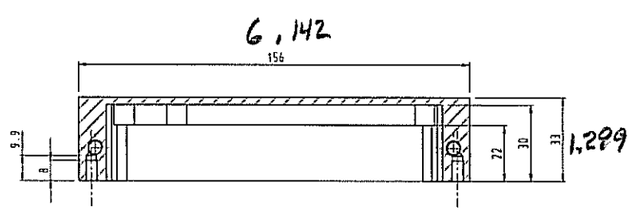

Section B--B

408

2-6-12

Rev. No.	Revision order No. and description of the revision	By	Date	ECO #
C	REVISED NOTE 2	EK	7/14/11	[illegible]
B	CENTER VIEW ON LEFT SIDE OF PAGE - CHANGED HIDDEN LINES FROM INVISIBLE TO DASHED FOR CLARITY	JBB	12/07/06	[illegible]
A	INITIAL RELEASE - Was 2845637	JG	11/01/06	[illegible]

Unless otherwise stated the following applies:
Dimensions in millimeters
Dimensions after surface treatment
Surface roughness in µm 3.2
Surface treatment 2
Surface finish before 0.2-0.4
Surface finish after 0.4
Material designation 6061-T6 ALUMINUM
Drawn by Legp
Checked by Legp
Date 20060228
Scale 1:1
Not apply dimension
Tolerances acc. to ISO 2768-mK
Welding tolerances acc. to ISO 13920-class
CardianBCT
HQ: 6175 Lusk Boulevard, Lakewood, Colorado 80215-4440 USA
Designation Housing
Sheet no / of 1/1
Drawing No. 986300-649
Actual rev. C

ITEM NO.	QTY	U/M	PART NO.	DESCRIPTION
903	4	EA.	986207-211	HELI-COIL INSERT, M3 x 4.5
902	2	EA.	986207-410	HELI-COIL INSERT, M5 x 5
901	4	EA.	986207-311	HELI-COIL INSERT, M4 x 6

BILL OF REFERENCE

The information contained herein is the property of CardianBCT, Inc. It is furnished in confidence and may not be used for any purpose other than that for which it is intended, except with written permission of CardianBCT, Inc. © 2006 CardianBCT, Inc.