REV	REVISION DESCRIPTION	BY	DATE	ECO #
C	REDRAWN TO COBE FORMAT/AUTOCAD, ADDED NOTE 1	VLF	12/12/94	65153
D	ANODIZE SPEC. WAS OMITTED ON CONVERSION	VLF	4/20/95	BCT 000180

NOTE:

1. ◆ INDICATTES KEY DIMENSIOM TO BE INSPECTED BY INCOMING Q.C.
2. ANODIZE PER MIL-A-8625 TYPE II, CLASS I

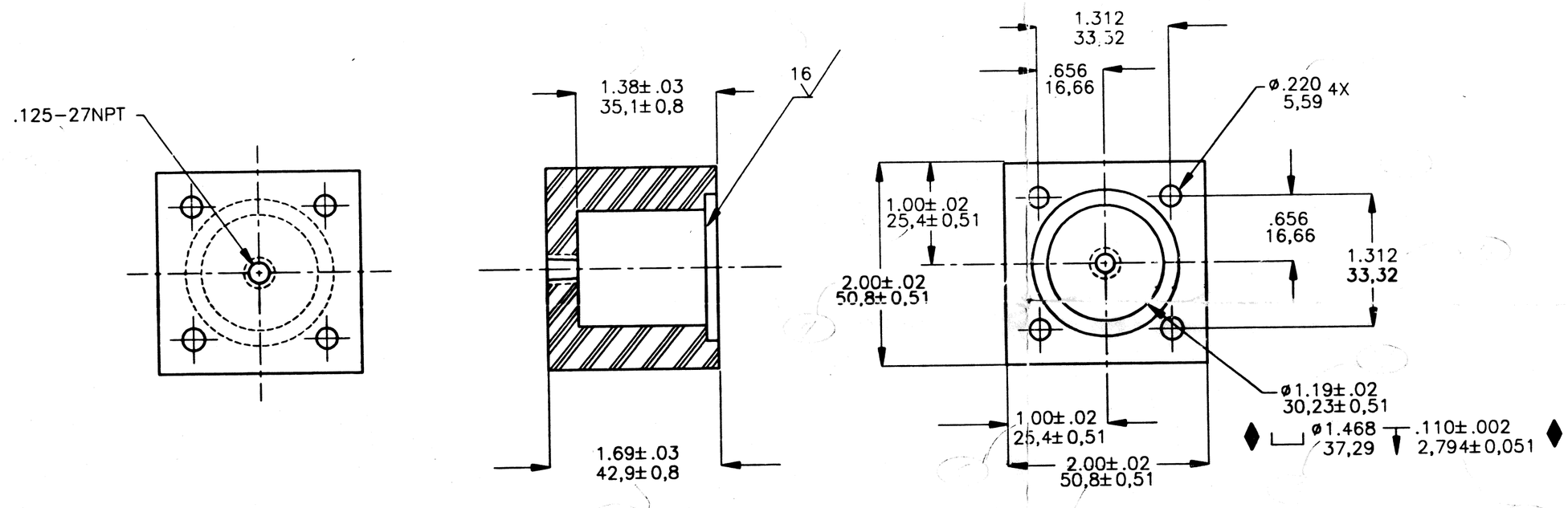

3-13-03

THESE DRAWINGS AND SPECIFICATIONS ARE THE PROPERTY OF COBE BCT INC. AND SHALL NOT BE REPRODUCED, COPIED, OR USED FOR MANUFACTURE OR SALE OF APPARATUS WITHOUT WRITTEN PERMISSION OF COBE BCT INC.

TOLERANCES AND SYMBOLOGY PER ANSI Y14.5M-1982 DIMENSIONS SPECIFIED ARE AFTER ADDITIVE FINISH.

.X± .XX± .XXX± .005 .XXXX±

ANGLES ±

SURF. FINISH

DIMENSIONS ARE IN INCHES UNLESS OTHERWISE SPECIFIED

MATERIAL 2024 OR 6061T6 ALUMINUM

ORIGINATOR | DATE

DRAWN VLFERGUSON | DATE 12/94

SIZE C | SCALE FULL | DO NOT SCALE DWG | THIRD ANGLE PROJECTION

COBE BCT Blood Component Technology a gambro company

COBE BCT INC. 1201 Oak Lakewood, Colorado 80215-4407 USA

TITLE BLOCK,SEAL

PART NO. 771820-726 | REV D | SHT 1 OF 1

408