NOTES:

1. BREAK ALL SHARP CORNERS AND EDGES R.02 MAX.
2. APPLY PERMANENT TYPE LOC-TITE TO SHOULDER BOLT AND TORQUE TO 2-4 IN/LBS.
3. MASKING OPTIONAL WHERE INDICATED.
4. RACK PARTS DURING ANODIZING IN ANY THRU HOLE OR AREAS INDICATED.
5. (I) INDICATES KEY DIMENSION TO BE INSPECTED BY INCOMING Q.C.

GENERAL SPECIFICATIONS FOR ANODIZED PART

6. COLOR: BLACK, TYPE 2, PER MIL-A-8625C
7. PERFORMANCE CHARACTORISTICS
   A. PURPOSE OF COATING: DECORATIVE.
   B. CRITICAL PART SURFACES
      CLASS A APPLIES IN ALL PLACES. SEE NOTE 1.
8. PROCESS
   RACK ONLY WHERE SHOWN. SEE NOTE 4 AND (2B) ABOVE.
   MASKING OF HOLES.
   MASKING REQUIRED IN 1 PLACE(S). SEE NOTE 3.
9. Q.C. INSPECTION CRITERIA
   A. SAMPLING PLAN ACCEPTABLE (AQL 1.5).

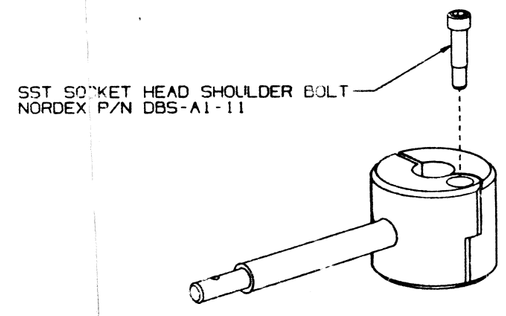

REV	REVISION DESCRIPTION	BY	DATE	ECO #
A	ORIGINAL RELEASE REPLACES 777066-249, 250	EL	5/5/88	43250
B	Ø.297 THRU U Ø.813 WAS Ø.281 THRU U Ø.75; ADDED PEPENDICULARITY WHICH WAS OMITTED FROM ORIGINAL RELEASE FROM DIM. Ø.094 +.003-.000	MDH	3/10/90	47340
C	ADDED INSP SYMBOL & NOTE 5	SC	12/12/94	65164
D	Added tolerance to .x in tol block	MH	3/13/95	BCT546

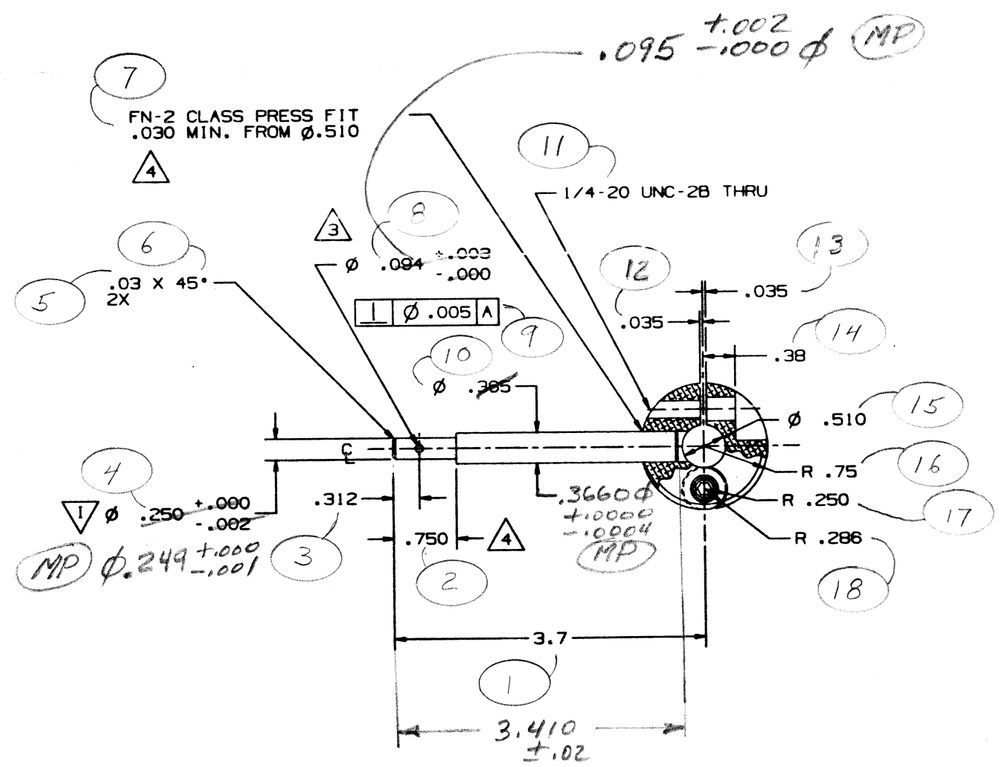

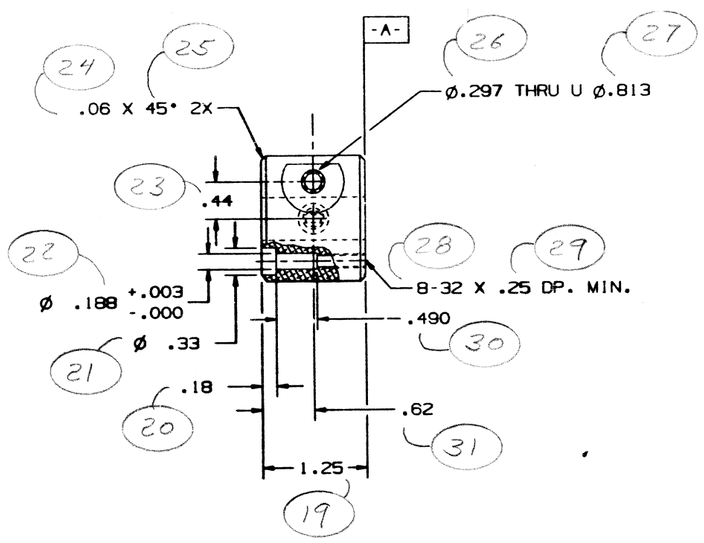

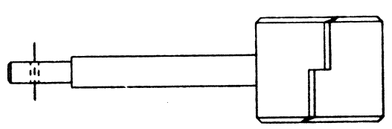

CAD GENERATED DWG
777066-997.prt

COBE BCT
COBE BCT, Inc.
Blood Component Technology
a gambro company

TITLE: CLAMP, POLE

MATERIAL: ALUMINUM 6061-T6

SURF. FINISH: 63RMS

ORIGINATOR: CAMBARERI

DATE: 5/5/88

PART NO. 777066-997 REV D SHT 1 OF 1

Dated Print 7-14-10

10/30/
408/95