REV	REVISION DESCRIPTION	BY	DATE	ECO #
01	PROTOTYPE	[illegible]	07/23/08	BCT
02	POLE DIA WAS .50; REMOVED HOOK DETAIL; MOVED DETAIL 2 TO OUTSIDE OF POLE	[illegible]	08/00/00	BCT
03	Hole diameter changed from .156 to .172	JD	11/03/08	BCT
04	PART NUMBER ERROR CORRECTED CHANGED FROM -062 TO -081	JD	11/10/00	BCT
05	ADDED GROOVES & CUTOUT TO BTM OF POLE	[illegible]	12/29/00	BCT
06	R.085 WAS R.065; ADDED 2° OFFSETS; .310 WAS .270; ADDED 4X R.03 & 2X R.04; ADDED DETAIL 3 & HORIZONTAL HOLES NOTE	[illegible]	02/02/09	BCT

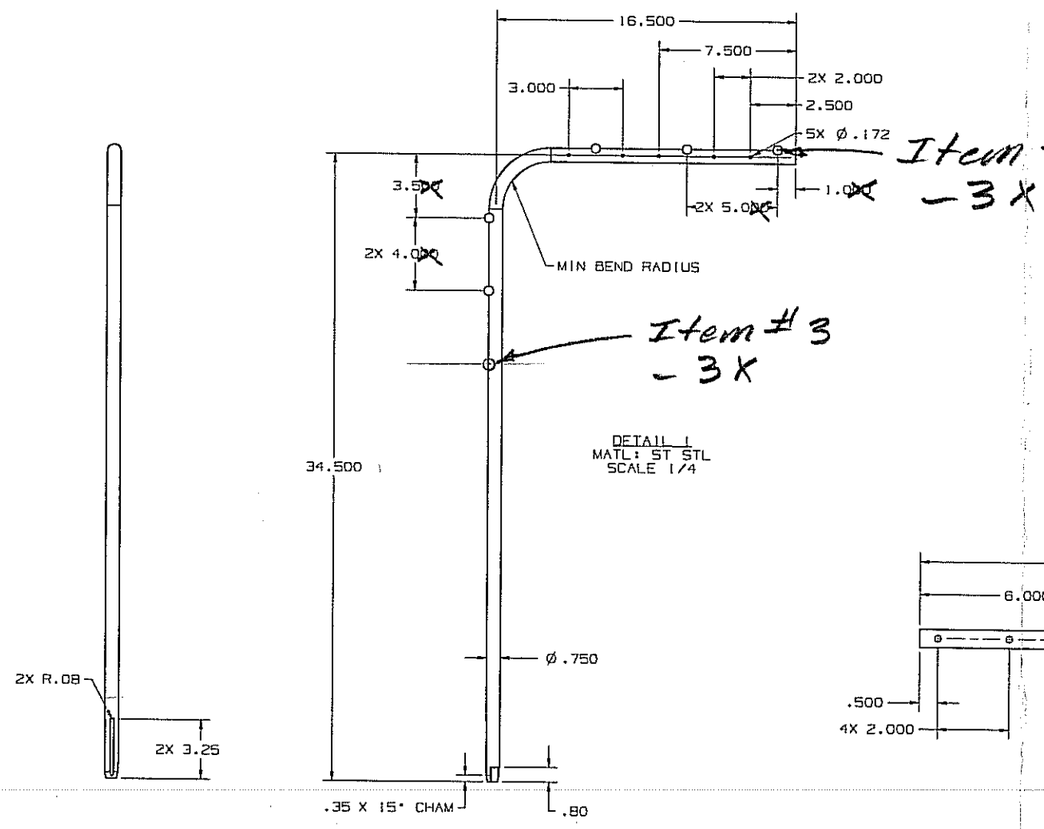

DETAIL 1
MATL: ST STL
SCALE 1/4

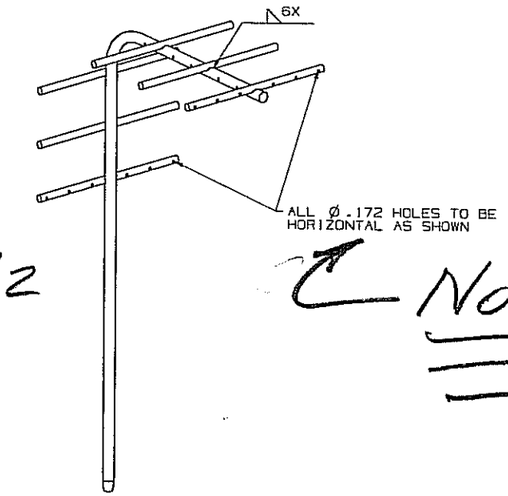

Note; to Welder

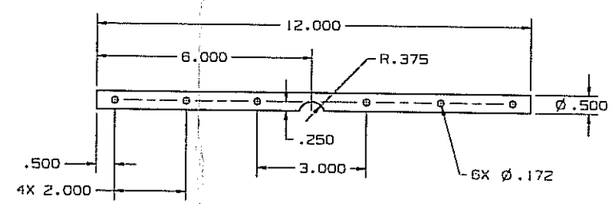

DETAIL 2 (3X)
MATL: ST STL
SCALE 1/2

Tube-Top

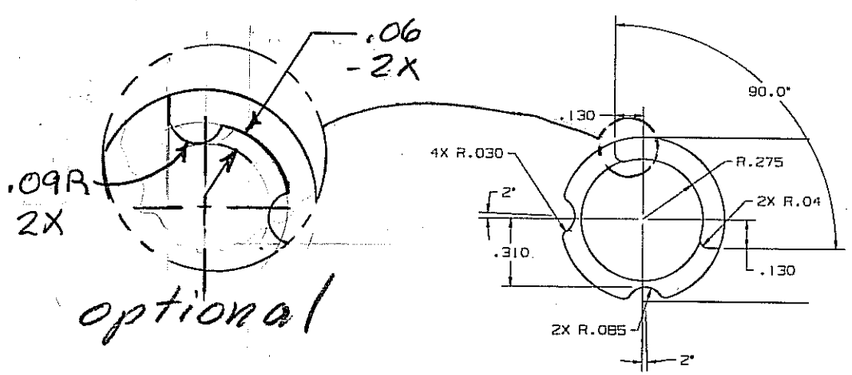

optional

SCALE 3:1

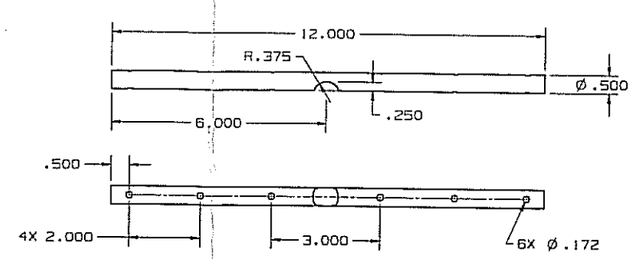

DETAIL 3 (3X)
MATL: ST STL
SCALE 1/2

Tube-Side

3-4-09 408

THESE DRAWINGS AND SPECIFICATIONS ARE THE PROPERTY OF CaridianBCT INC. AND SHALL NOT BE REPRODUCED, COPIED, OR LOANED OR EXHIBITED TO ANYONE OTHER THAN THE PERSONS TO WHOM THEY ARE ASSIGNED, NOR SHALL THEY BE USED IN THE MANUFACTURE OR SALE OF APPARATUS WITHOUT WRITTEN PERMISSION OF CaridianBCT INC.

TOLERANCES AND STANDARDS PER ASME Y14.5M-1982 DIMENSIONS SPECIFIED ARE AFTER ADDITIVE FINISH.

.x ± 0.04
.xx ± 0.015
.xxx ± 0.010
.xxxx ± 0.0020

ANGLES ± 3°

SURF. FINISH --

DIMENSIONS ARE IN INCHES UNLESS OTHERWISE SPECIFIED

MATERIAL NOTED

ORIGINATOR

DATE

DRAWN CROSS

DATE 07/23/08

SIZE D | SCALE NOTED | DO NOT SCALE DWG | THIRD ANGLE PROJECTION

UNIGRAPHICS

CaridianBCT
10811 Collins Avenue
Lakewood, Colorado 80215-4440
USA

TITLE

BAG POLE

PART NO. 004100-081 | REV 06 | SHT 1 OF 1