NOTES :

1. ▽I INDICATES KEY FEATURES TO BE VERIFIED BY INCOMING Q.C.
2. YELLOW CHROMATE CONVERSION PER MIL-C-5541E, CLASS 3
3. BREAK ALL SHARP EDGES AND CORNERS.

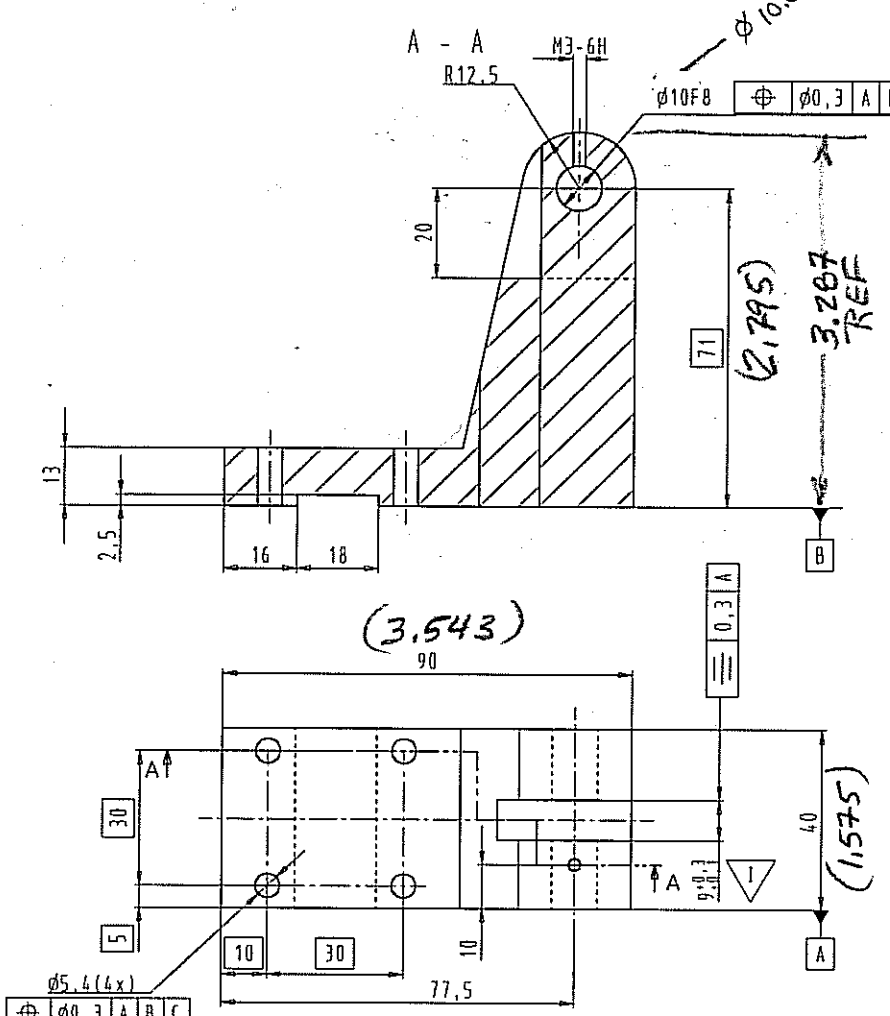

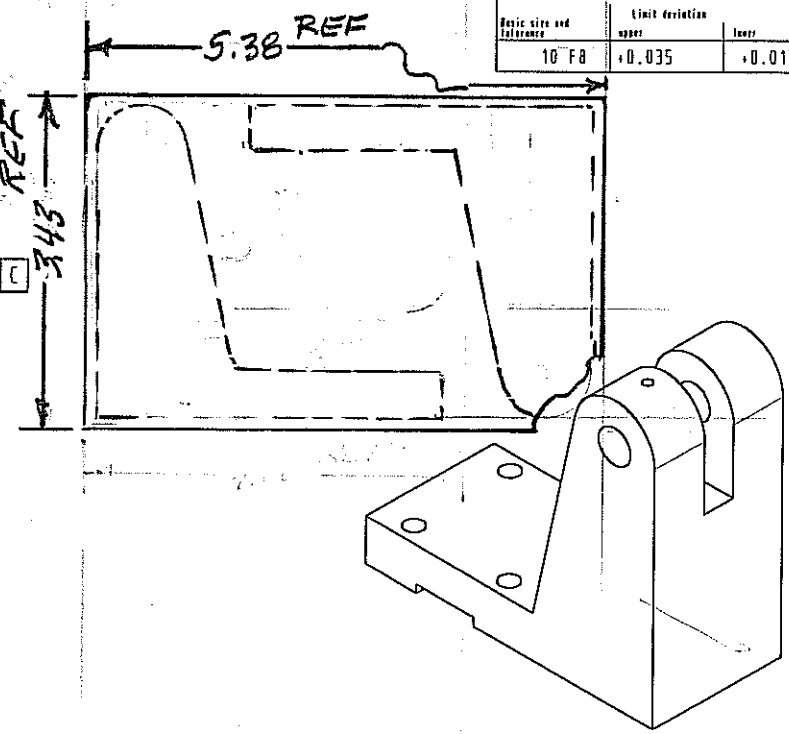

Tolerances acc. to ISO		
Basic size and Tolerance	Limit deviation upper	lower
10 F8	+0.035	+0.013

3-02-09 408

Rev. No.	Revision order No. and description of the revision	By	Date	ECO #
A	Initial Release, Was 2772085	JG	08/25/06	BC1017588

Unless otherwise stated the following applies:
Dimensions in millimeters
Dimensions after surface treatment

Surface treatment ▽2

Surface roughness R_a µm ▽3.2

Sharp edges broken 0.2-0.4

Fillet radii 0.2-0.4

Material designation: 7075-T6 ALUMINIUM

Drawn by: Kac | Checked by: Legp | Date: 990525 | Scale: 1:1

1st Angle Projection

Tolerances acc. to ISO 2768-class: mK

Welding tolerances acc. to ISO 13920-class

GAMBRO BCT

Denomination: Front Bracket

Sheet no / of: 1/1

Drawing No.: 986300-606

Latest rev.: A

This drawing and the information contained herein is the property of Gambro BCT, Inc. and shall not be reproduced, copied, or used for any purpose without written permission of Gambro BCT, Inc.
© 2005 Gambro BCT, Inc.