REV	REVISION DESCRIPTION	BY	DATE	ECO #
A	ORIGINAL RELEASE	VLF	7/21/94	58791

NOTES:

1. ♦INDICATES FEATURES TO BE CHECKED AT INCOMING Q.C.
2. BREAK AND DEBURR ALL SHARP EDGES R.015.
3. △3 RACKING PERMITTED ON NOTED FEATURES ONLY.

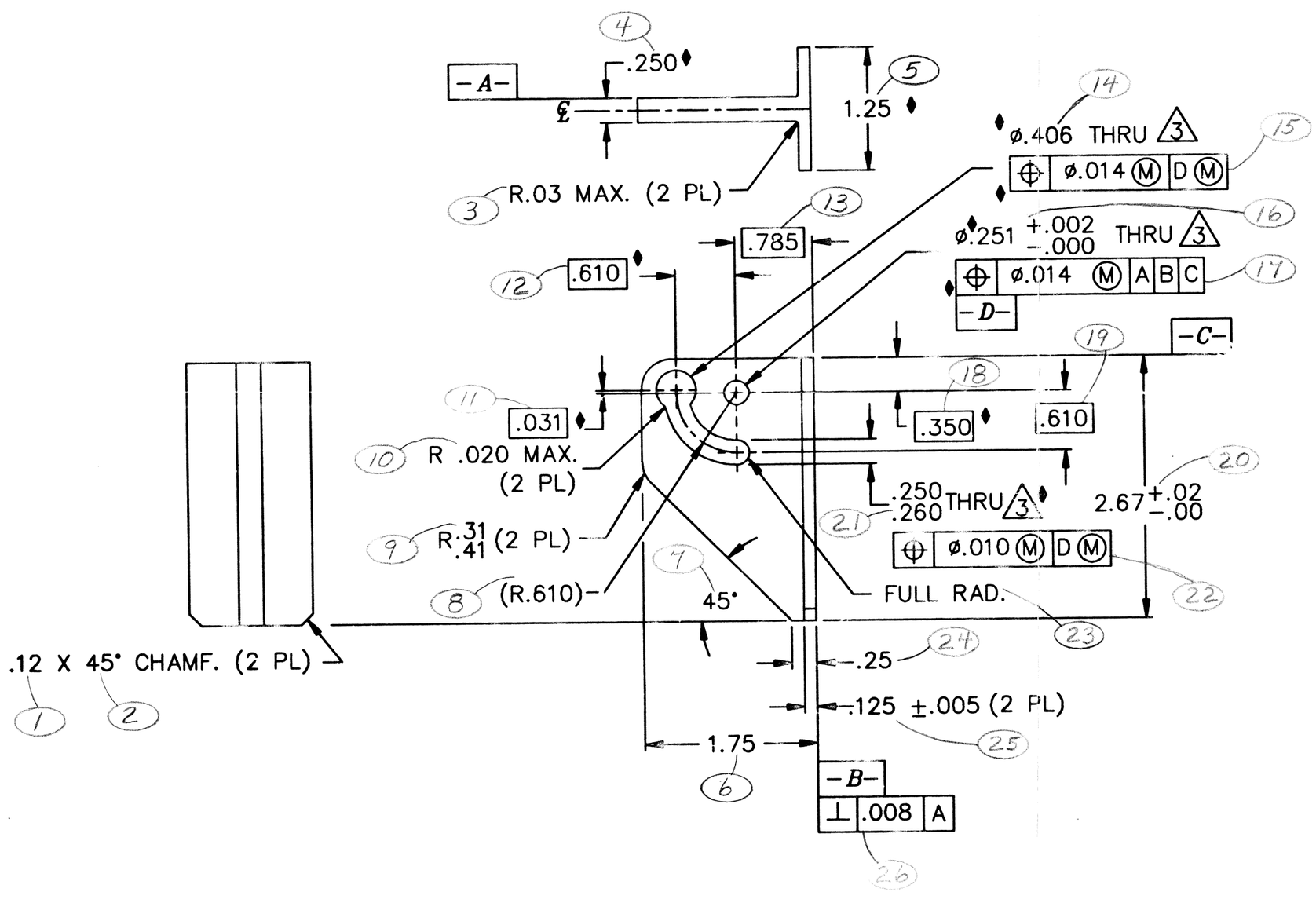

GENERAL SPECIFICATIONS FOR ANODIZED PART

1. ANODIZE PER MIL-A-8625, TYPE III,CLASS 2, COLOR BLACK.
2. ALL DIMENSIONS TO BE HELD TO TOLERANCE AFTER ANODIZATION
3. PERFORMANCE CHARACTERISTICS
   A. PURPOSE OF COATING
      ■ DECORATIVE
      ■ CORROSION RESISTANCE
      □ OTHER
   B. SEALING (IF UNSPECIFIED, SEAL WITH WATER)
      □ OTHER SEALANT REQUIRED. SPECIFY:NICKEL ACETATE
4. PROCESS
   A. RACKING POINTS (ANODIZER'S DISCRETION, UNLESS SPECIFIED)
      ■ RACK ONLY ON FEATURES INDICATED WITH NOTE △3
   B. MASKING OF HOLES AND/OR OTHER FEATURES
      ■ DO NOT MASK.
      □ MASKING REQUIRED IN PLACE(S). SEE NOTE
      NOTE: GAUGES TO BE USED AFTER COATING, WHETHER MASKED OR NOT.
5. QC INSPECTION CRITERIA
   A. ■ SAMPLING PLAN ACCEPTABLE (AQL 1.5).

DATED PRINT 8-31-95

AUTOCAD DWG
ORIG DISK:
FILE: 7067826.DWG

AUTOCAD GENERATED DRAWING

THESE DRAWINGS AND SPECIFICATIONS ARE THE PROPERTY OF COBE BCT INC AND SHALL NOT BE REPRODUCED, COPIED, OR USED FOR MANUFACTURE OR SALE OF APPARATUS WITHOUT WRITTEN PERMISSION OF COBE BCT INC.

TOLERANCES AND SYMBOLOGY PER ANSI Y14.5M-1982 DIMENSIONS SPECIFIED ARE AFTER ADDITIVE FINISH.

.X±.1
.XX±.01
.XXX±.005
.XXXX±N/A
ANGLES ± .5°
SURF. FINISH 32

DIMENSIONS ARE IN INCHES UNLESS OTHERWISE SPECIFIED

MATERIAL ALUMINUM 6061-T6

ORIGINATOR J WALKER DATE 9/21/93
DRAWN J PAYLOR DATE 2/19/92

SIZE C SCALE 1:1 DO NOT SCALE DWG THIRD ANGLE PROJECTION

COBE BCT
COBE BCT INC. Blood Component Technology a gambro company
1201 Oak Lakewood, Colorado 80215-4407 USA

TITLE PLATE, MOUNTING

PART NO. 777067-826 REV A SHT 1 OF 1

Dated Print 8-27-96

408