ASSEMBLY NOTES:

1. SLIDE SHAFT SLEEVE, #903, OVER HEX RETAINER SHAFT, #902. INSERT SPRING, #907, INTO HEX RETAINER SHAFT, #902. TAKE THESE ITEMS AND INSERT THEM INTO HEX BODY, #904.
2. SLIDE KEEPER KEY, #901, OVER HEX RETAINER SHAFT, #902. COMPRESSING THE SPRING SLIGHTY, ATTACH KEEPER KEY, #901 TO HEX BODY #904 USING BUTTON HEAD SCR., #913 (APPLY LOCTITE, #911, TO SCREW THREADS). ENSURE THAT KEEPER KEY EDGE IS FLUSH WITH HEX BODY EDGE AS SHOWN IN RIGHT VIEW.
3. COMPRESSING SPRING, #907, WORK RETAINER SHAFT IN & OUT OF HEX BODY TO ENSURE SMOOTH OPERATION.
4. INSERT RELEASE SHAFT, #914, INTO HEX BODY, #904. INSERT RELEASE SPRING, #915, INTO RELEASE SHAFT.
5. PRESS DOWEL PINS, #916, INTO CAP PLATE, #910.
6. ATTACH CAP PLATE, #910, TO HEX BODY, #904, USING SCREWS #909.
7. ATTACH HEX BODY, #904, TO LATCH PLATE, #905, USING SCREWS #908 (APPLY LOCTITE, #911, TO SCREW THREADS).
8. INSERT LATCH PLATE, #905, INTO HINGE BLOCK, #906, AS SHOWN IN FRONT VIEW. ROTATE LATCH PLATE , #905, SO THAT HOLE "A" IN LATCH PLATE ALIGNS WITH HOLE "B" IN HINGE BLOCK. WITH THESE TWO HOLES ALIGNED INSERT, QTY (1), SST BALL, #922, FOLLOWED BY SPRING, #907, AND THEN THE REMAINING SST BALL, #922.
9. USING AN APPROPRIATELY SIZED TOOL AGAINST THE SST BALL, #922, COMPRESS THE SPRING AND ROTATE LATCH PLATE, #905, CLOCKWISE UNTIL THE SST BALLS DETENT INTO A LOCATING FEATURE IN THE HINGE BLOCK, A POSITION 90 DEG FROM THAT SHOWN IN FRONT VIEW.
10. MOUNT SPACER #921 ON HINGE BLOCK #906 SO THAT SPACER IS AGAINST THE BOTTOM SURFACE OF THE LATCH PLATE #905.
11. ATTACH SCREW #912, TO HINGE BLOCK, #906 (APPLY LOCTITE, #911, TO SCREW THREADS.
12. ENSURE THE HEX RETAINER/RELEASE FUNCTIONS SMOOTHLY AFTER ASSEMBLY.
13. FILL THE INTERIOR OF CAP, ITEM 920 SO THAT IT COVERS THE GRIP SPRINGS. INSTALL CAP ON SHAFT, ITEM 902 SO IT STOPS AGAINST THE INSIDE OF CAP. ALLOW EPOXY TO CURE WITH THE CAP DOWN.

GENERAL NOTES:

1. INDICATES KEY DIMENSIONS TO BE CHECKED AT INCOMING Q.C.

| REV | REVISION DESCRIPTION | BY | DATE | ECO # |
|---|---|---|---|---|
| A | ORIGINAL RELEASE, SIM TO 777098-429 | DG | 02/27/07 | BCT019049 |
| B | ADDED DETAIL G TO SHOW HOLES "A" AND "B" | DG | 03/16/07 | BCT019184 |
| C | REMOVED "OPTIA" FROM TITLE BLOCK. | AR | 08/28/07 | BCT020432 |

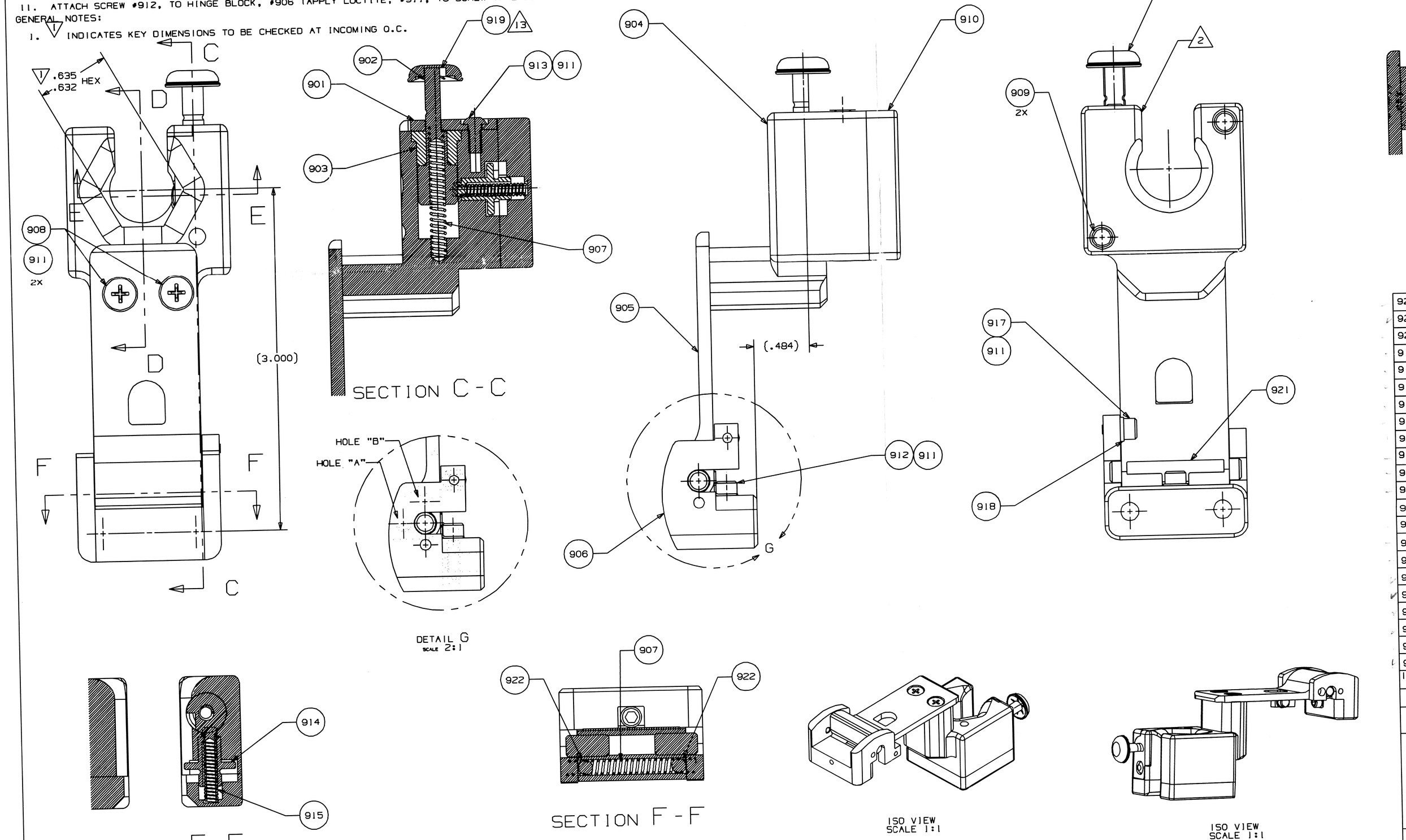


| ITEM NO. | QTY | U/M | PART NO. | DESCRIPTION |
|---|---|---|---|---|
| 922 | 2 | EA | 777067-115 | BALL, SST, 1/8" |
| 921 | 1 | EA | 777099-282 | SPACER |
| 920 | 1 | EA | 777098-248 | CAP, MM-CARR, 94802A110 Push Nut |
| 919 | .01 | OZ | 777098-249 | EPOXY, 3M, EC-2216 B/A, TRANSLUCENT |
| 918 | 1 | EA. | 779013-200 | WASHER, SPLIT, SST, #4 |
| 917 | 1 | EA. | 779019-100 | SCREW, SCH, SST, 4-40, 3/16 |
| 916 | 2 | EA. | 779029-305 | PIN, DOWEL, SST, 3/32, 3/8 |
| 915 | 1 | EA. | 777096-709 | SPRING, RELEASE |
| 914 | 1 | EA. | 777098-299 | SHAFT, RELEASE |
| 913 | 1 | EA | 779032-101 | SCR, BTN, SCH, SST BLACK OXIDE#4-40x1/4 |
| 912 | 1 | EA | 779019-102 | SCR, SCH, SST, 4-40, 3/8 |
| 911 | .001 | OZ | 778128-000 | ADHESIVE, LOCTITE 242, BLUE |
| 910 | 1 | EA | 777099-472 | PLATE, CAP |
| 909 | 2 | EA. | 779044-102 | SCR, SCH, SST, LK, 4-40, 3/8 |
| 908 | 2 | EA. | 779208-306 | SCR, FLH, PHH, SST, 6-32, 1/2 |
| 907 | 2 | EA. | 777096-089 | SPRING, FILLER HEX HOLDER |
| 906 | 1 | EA. | 777098-252 | BLOCK, HINGE |
| 905 | 1 | EA. | 777098-251 | PLATE, LATCH |
| 904 | 1 | EA. | 777099-469 | BODY, HEX |
| 903 | 1 | EA. | 777096-728 | SLEEVE, SHAFT |
| 902 | 1 | EA. | 777099-468 | SHAFT, HEX RETAINER |
| 901 | 1 | EA. | 777099-467 | KEY, KEEPER 6-12-09 408 |

BILL OF REFERENCE

THESE DRAWINGS AND SPECIFICATIONS ARE THE PROPERTY OF GAMBRO BCT, INC AND SHALL NOT BE REPRODUCED IN WHOLE OR IN PART, OR USED FOR MANUFACTURE OR SALE OF APPARATUS WITHOUT WRITTEN PERMISSION OF GAMBRO BCT INC

10811 Collins Avenue, Lakewood, Colorado 80215-4460 USA
GAMBRO BCT

TOLERANCES AND SYMBOLOGY PER ASME Y14.5M-1994. DIMENSIONS SPECIFIED ARE AFTER ADDITIVE FINISH

x± 0.1
xx± 0.01
xxx± 0.005
xxxx± 0.0020

ANGLES ± 2°

SURF FINISH NA

DIMENSIONS ARE IN INCHES UNLESS OTHERWISE SPECIFIED

MATERIAL: SEE ABOVE

ORIGINATOR: GIBBONS 02/27/07

DRAWN: GIBBONS 02/27/07

TITLE: HEX HOLDER ASSY, FILLER

SIZE D | SCALE 2:1 | DO NOT SCALE DWG | THIRD ANGLE PROJECTION

PART NO. 777094-492 | REV C | SHT 1 OF 1

UG DWG.