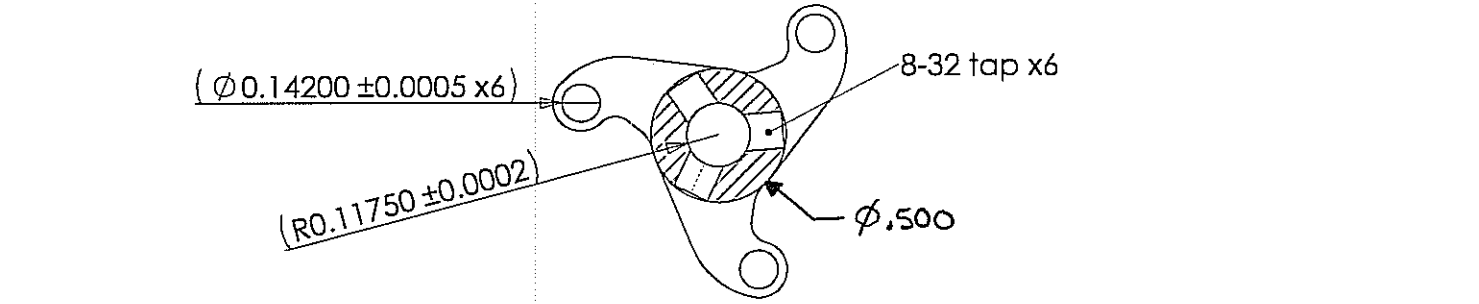


SECTION A-A
SCALE 3 : 1

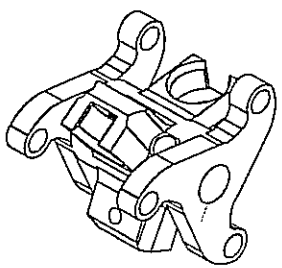

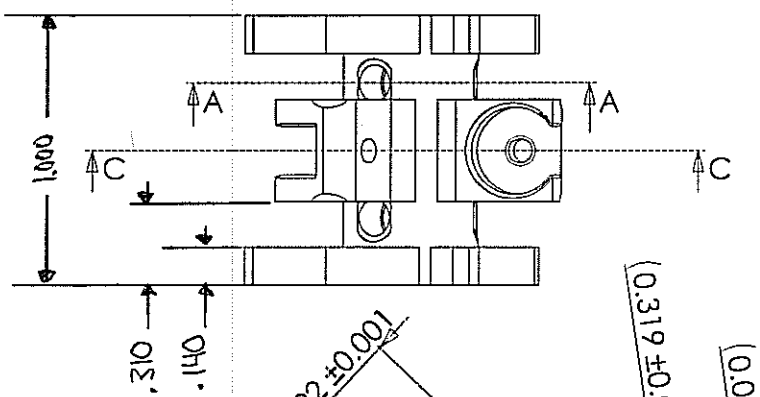


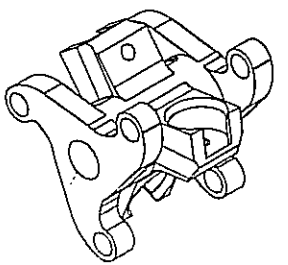

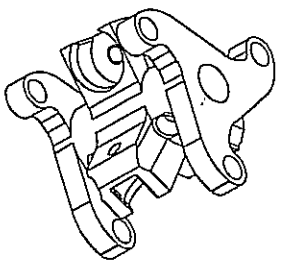

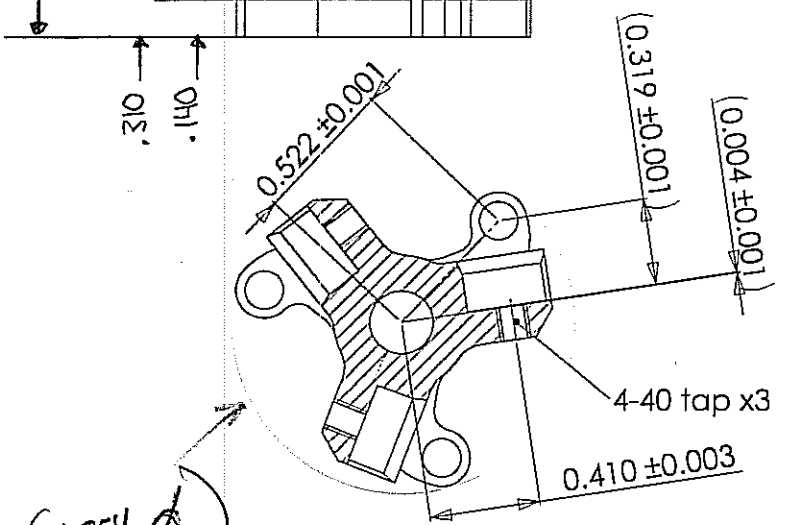


SECTION C-C
SCALE 3 : 1

4/13/09 408

Material: Aluminum or Stainless Steel

Center - Spring Pump 004101-014 rev-8

UNLESS OTHERWISE SPECIFIED:
NAME DATE
DRAWN
CHECKED
ENG APPR.
MFG APPR.
Q.A.
COMMENTS:
TITLE:
SIZE DWG. NO. REV
C
SCALE: 2:1 WEIGHT: 31.456 SHEET 1 OF 1
DO NOT SCALE DRAWING