NOTES:
1. REMOVE ALL BURRS AND BREAK SHARP CORNERS.

2. FINISH- ANODIZE PER MIL-A-8625F, TYPE II, CLASS 2, DYED BLACK WITH A NICKEL ACETATE SEAL.

3 INDICATES FEATURE / DIMENSION TO BE CHECKED AT INCOMING INSPECTION.

REV	REVISION DESCRIPTION	BY	DATE	ECO #
A	INITIAL RELEASE	TP	01/31/11	BCT02991

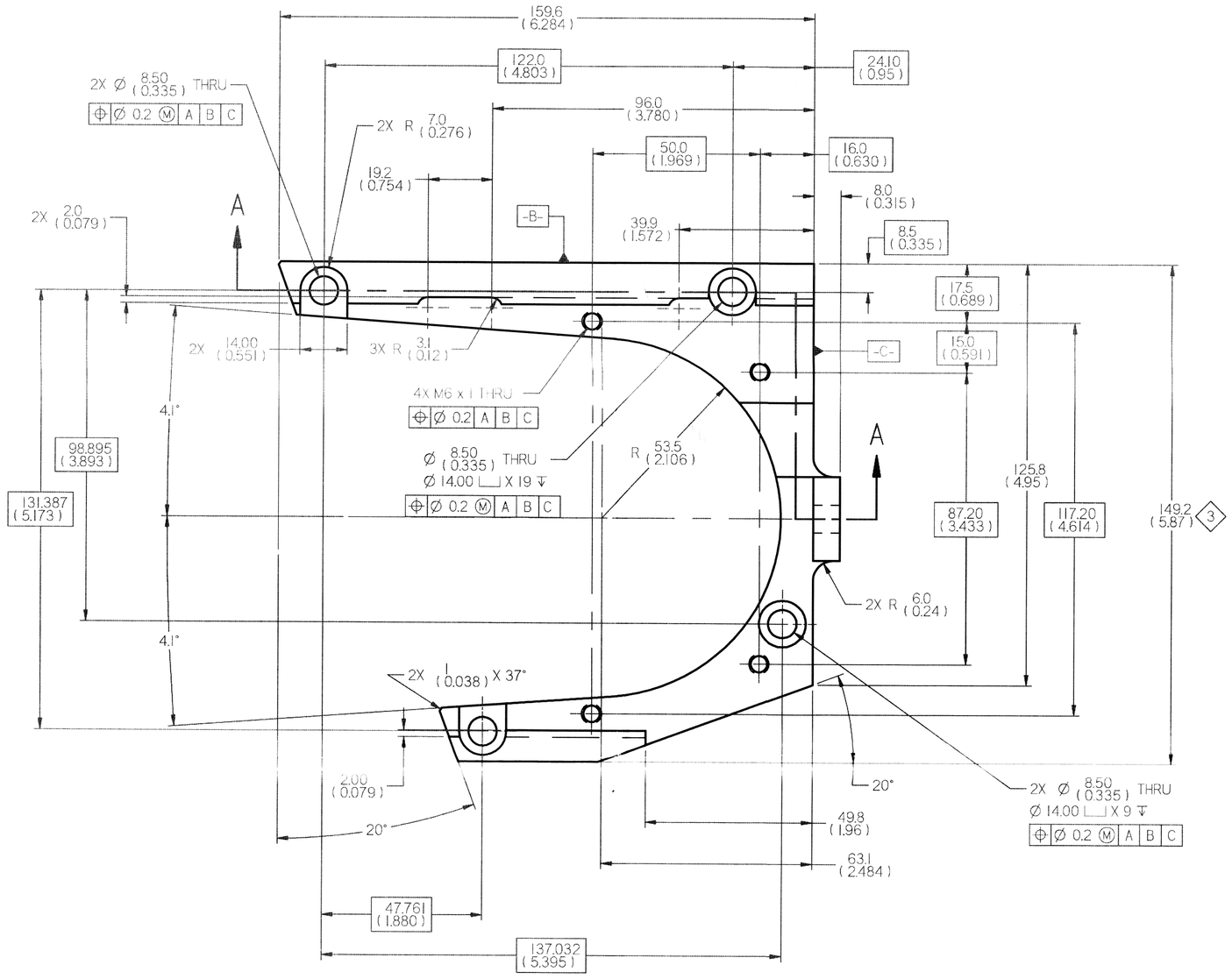

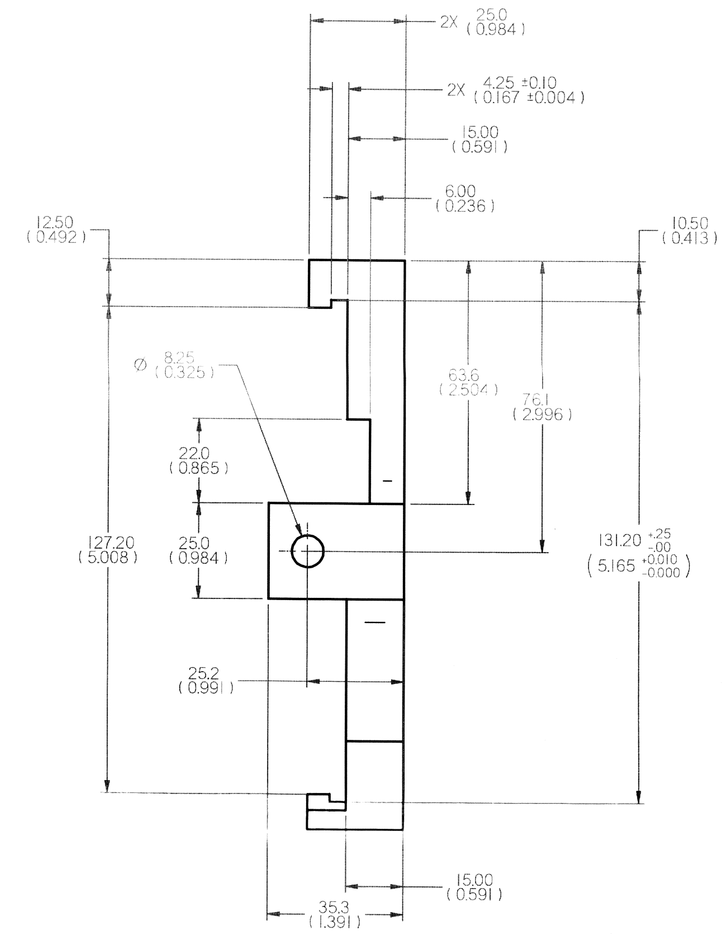

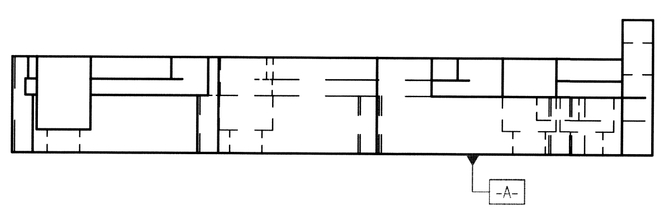

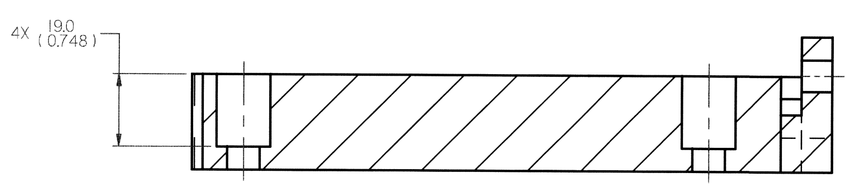

SECTION A-A

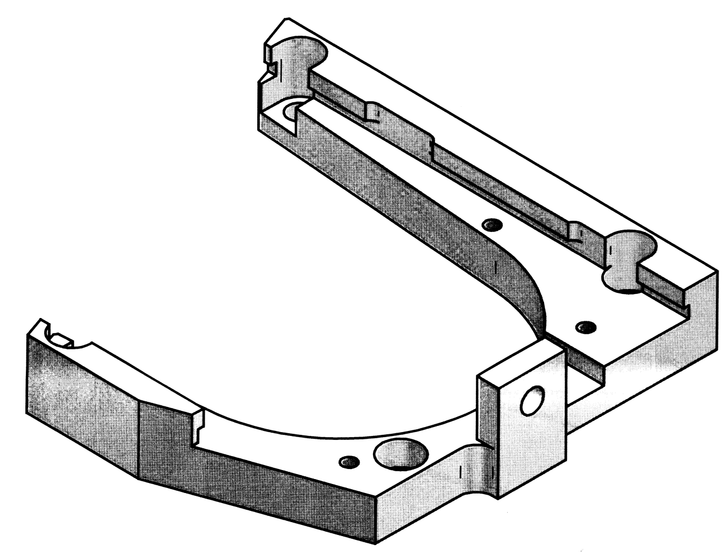

Ref 1.50x8.00x6.70 makes 2-parts

3-1-11 408

THESE DRAWINGS AND SPECIFICATIONS ARE THE PROPERTY OF CaridianBCT, INC. AND SHALL NOT BE REPRODUCED, COPIED, OR USED FOR MANUFACTURE OR SALE OF APPARATUS WITHOUT WRITTEN PERMISSION OF CaridianBCT, INC.

TOLERANCES AND SYMBOLOGY PER ANSI Y14.5M-1982
DIMENSIONS SPECIFIED ARE AFTER ADDITIVE FINISH

X± 1.0
X.X± 0.2
X.XX± 0.10
X.XXX± 0.050

ANGLES ± 1°

SURF. FINISH 0.8

DIMENSIONS ARE IN mm UNLESS OTHERWISE SPECIFIED

MATERIAL: Aluminum, 6061-T6

ORIGINATOR: T. PEARCE — DATE: 04/13/10
DRAWN: T. PEARCE — DATE: 04/13/10

SIZE: D — SCALE: 1 : 1 — DO NOT SCALE DWG — THIRD ANGLE PROJECTION

SOLID EDGE Version 20

CaridianBCT
10811 West Collins Avenue
Lakewood, Colorado 80215-4440
USA

TITLE: STAGE, MOTOR MOUNTING

PART NO. 986350-302 — REV A — SHEET 1 OF 1