REV	REVISION DESCRIPTION	BY	DATE	ECO #

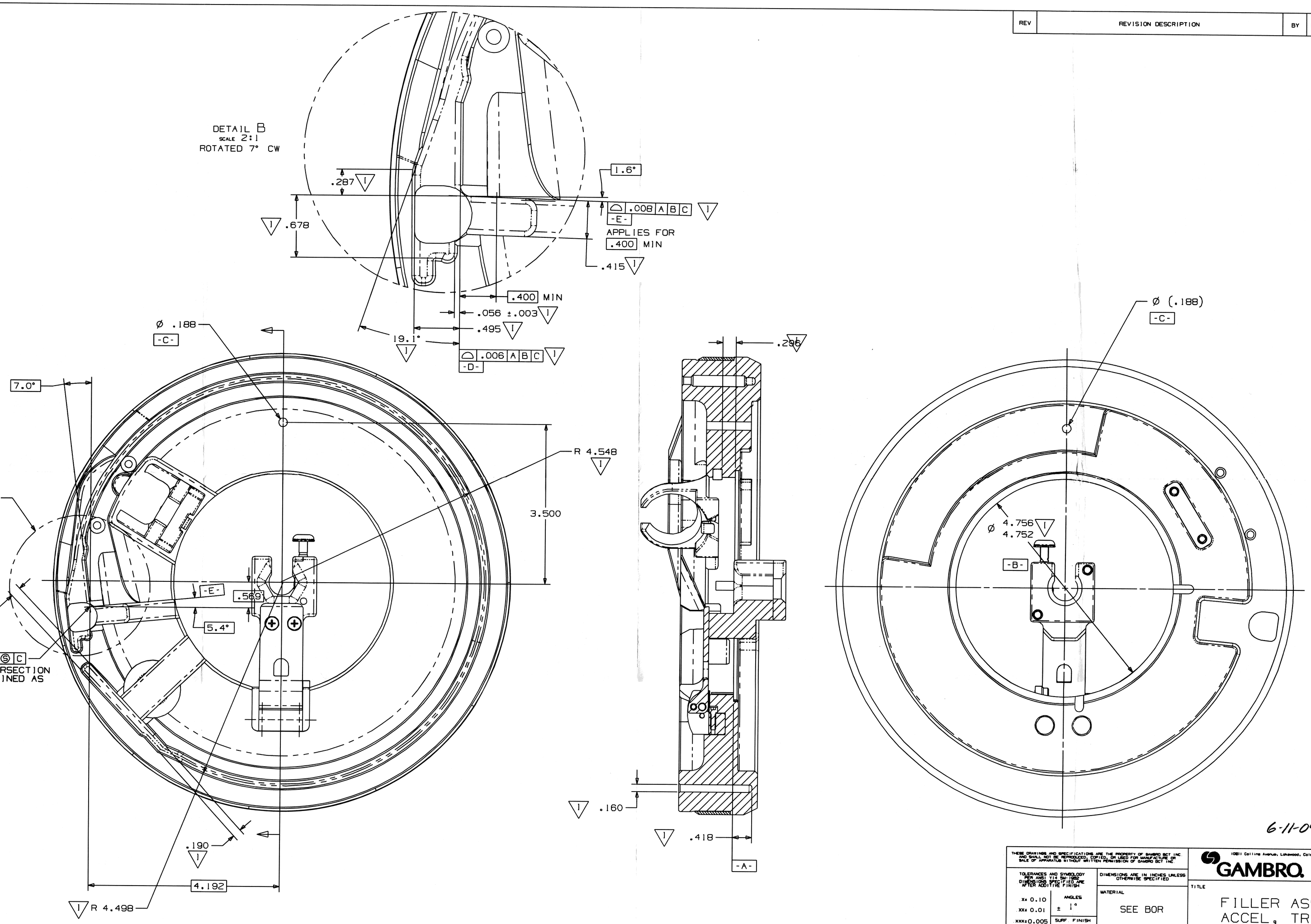

6-11-09 40B

UNIGRAPHICS

THESE DRAWINGS AND SPECIFICATIONS ARE THE PROPERTY OF GAMBRO BCT INC. AND SHALL NOT BE REPRODUCED, COPIED, OR USED FOR MANUFACTURE OR SALE OF APPARATUS WITHOUT WRITTEN PERMISSION OF GAMBRO BCT INC.

TOLERANCES AND SYMBOLOGY PER ANSI Y14.5M-1982
DIMENSIONS SPECIFIED ARE AFTER ADDITIVE FINISH

X± 0.10	ANGLES ± 1°
XX± 0.01	
XXX±0.005	SURF FINISH
XXXX±0.0020	NA

DIMENSIONS ARE IN INCHES UNLESS OTHERWISE SPECIFIED

MATERIAL: SEE BOM

ORIGINATOR: A. ROOMI — DATE: DEC 24/07

DRAWN: A. ROOMI — DATE: DEC 24/07

SIZE: D — SCALE: 1 = 1 — DO NOT SCALE DWG — THIRD ANGLE PROJECTION

GAMBRO BCT
10811 Collins Avenue, Lakewood, Colorado 80215-4440 USA

TITLE: FILLER ASSY, ACCEL, TRIMA

PART NO: 777098-451 — REV: F — SHT 2 OF 2