REV	REVISION DESCRIPTION	BY	DATE	ECO #
A	INITIAL RELEASE	BSE	11/11/11	BCT032399

NOTES

1. BREAK ALL SHARP EDGES AND CORNERS.
2. ▽ INDICATES FEATURE/DIMENSION TO BE CHECKED AT INCOMING INSPECTION.

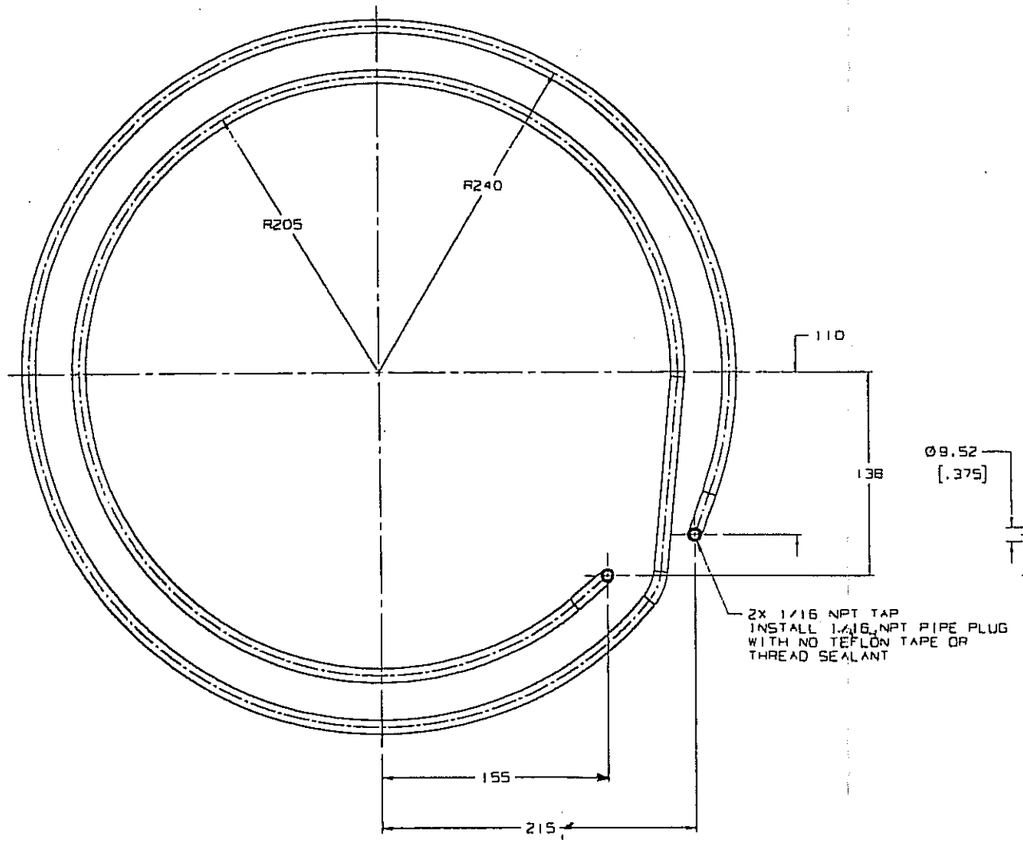

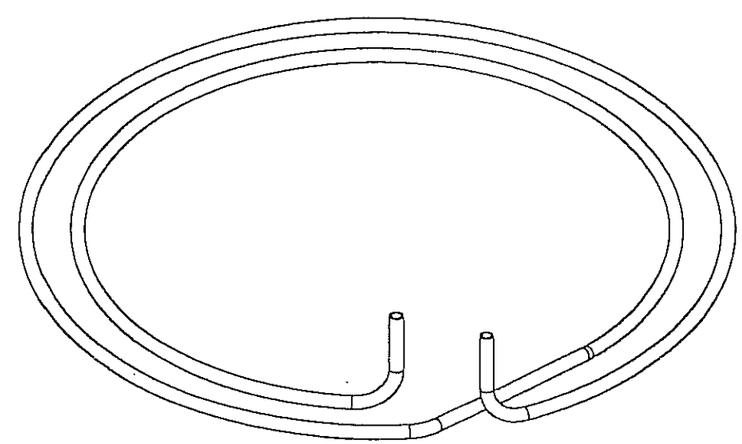

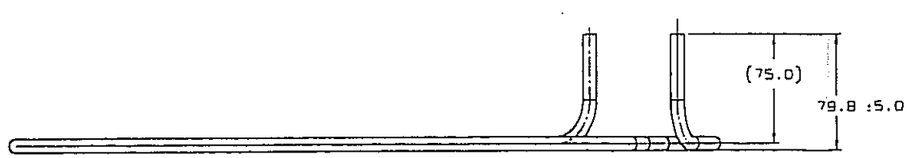

3-15-12 408

THESE DRAWINGS AND SPECIFICATIONS ARE THE PROPERTY OF CARLISLE INC. DO NOT DUPLICATE OR DISTRIBUTE WITHOUT WRITTEN PERMISSION.

TOLERANCES ARE DEVELOPED FOR MACHINED PARTS. STAMPED PARTS ARE AFTER TUMBLING FINISH. ALL DIMENSIONS ARE IN MILLIMETERS UNLESS OTHERWISE SPECIFIED. DIMENSIONS IN ( ) ARE IN INCHES.

CarlidianBCT

INCH TOLERANCES	MILLIMETER TOLERANCES	ANGLES	MATERIAL	TITLE
.X ±	X.X ± 1.0	± 5	COPPER ALLOY 122 .375 INCH OD X .245 INCH ID TUBING	TUBE COIL CAST IN
.XX ±	X.XX ± 0.2	SURF. FINISH		
.XXX ±	X.XXX ± 0.10			
.XXXX ±	X.XXXX ± 0.050			

UNIGRAPHICS

SIZE	SCALE	SHEET SCALE	DRAWN	DATE	PART NO	REV	SHT	OF
D	1/2		ELLINGBOE		986302-283	A	1	1