| REV | REVISION DESCRIPTION | BY | DATE | ECO # |
|---|---|---|---|---|
| C | CHANGED MATERIAL CALLED OUT IN DETAILS A,B,C WAS 304 SST. | VLF | 11/19/91 | BCT 61050 |

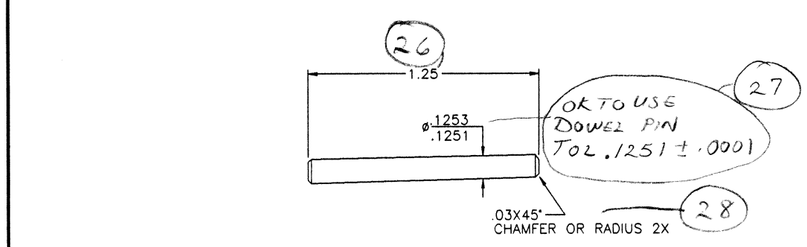


DETAIL A
MATERIAL: STAINLESS STEEL 303 OR 18-8
SCALE: 2X

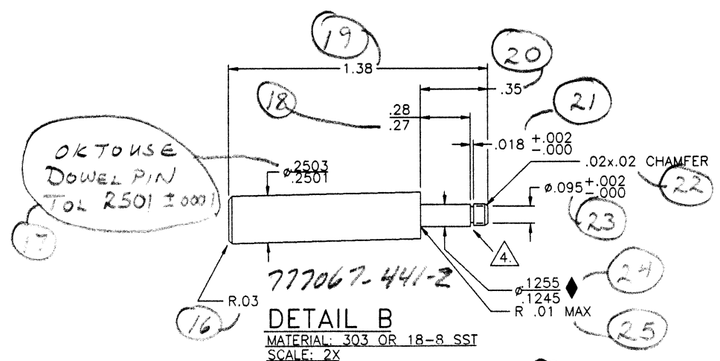


DETAIL B
MATERIAL: 303 OR 18-8 SST
SCALE: 2X

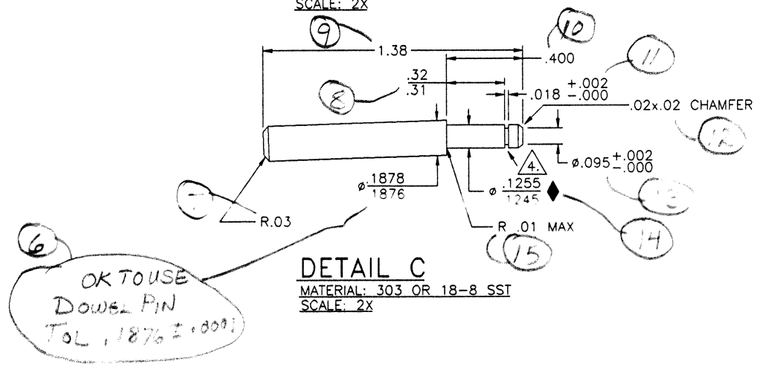


DETAIL C
MATERIAL: 303 OR 18-8 SST
SCALE: 2X

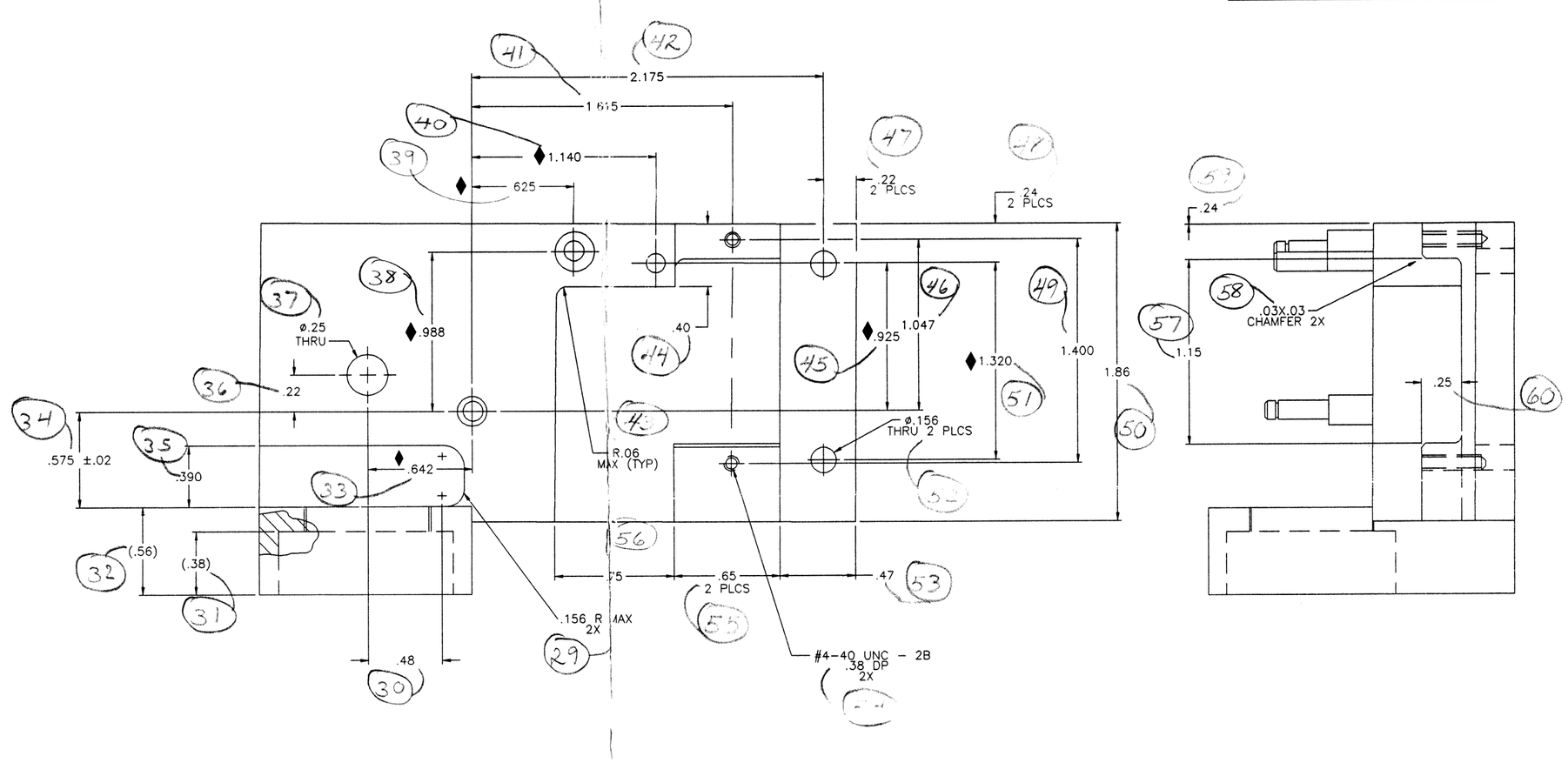


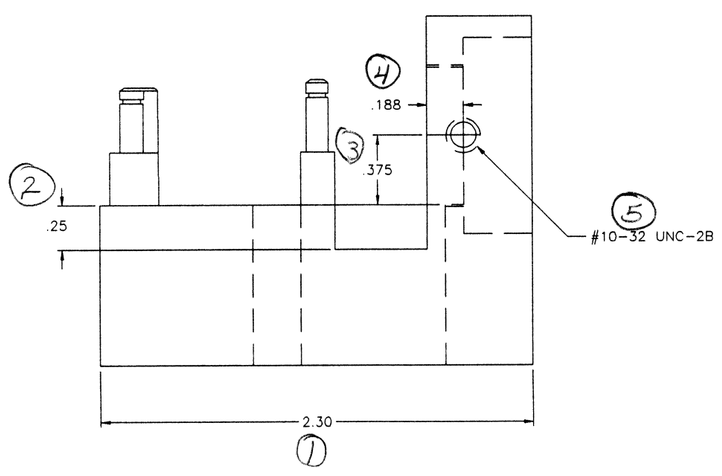


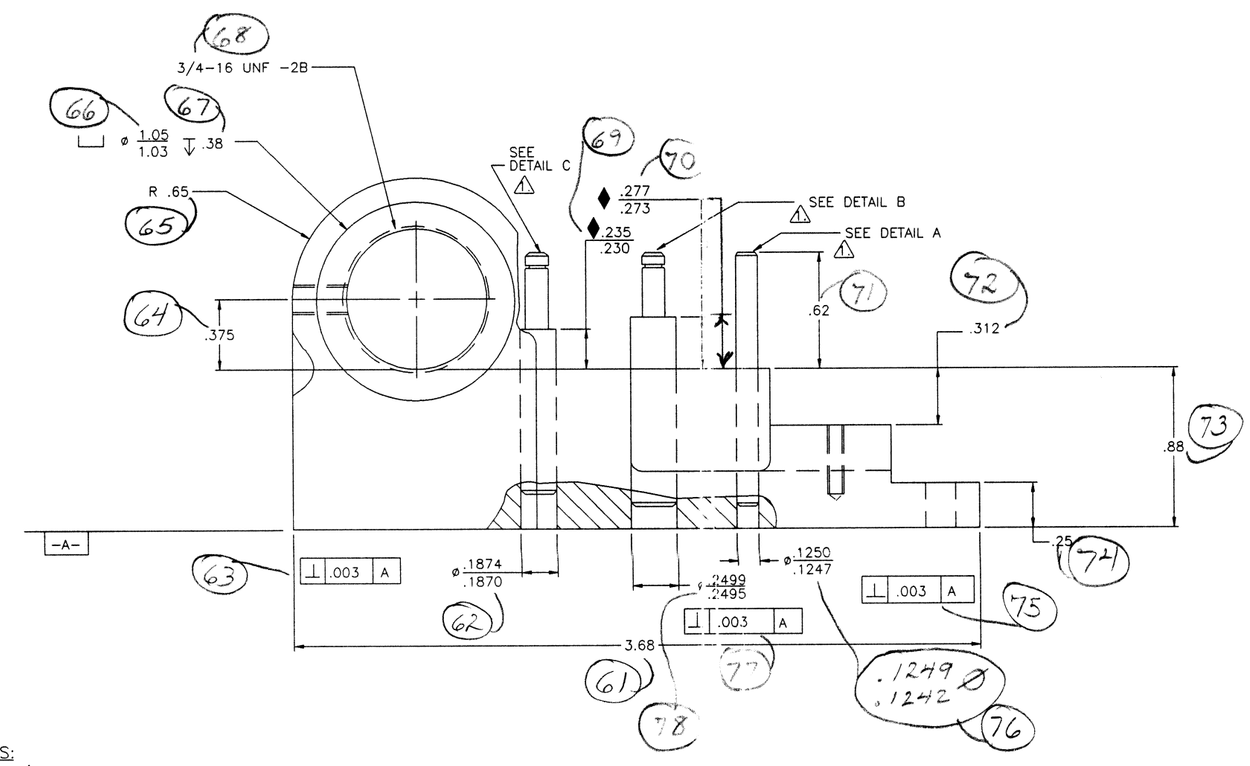


NOTES:

1. DOWEL PINS ARE TO BE PRESS FIT INTO BASE AFTER FINISH IS APPLIED.
2. DEBURR OR BREAK ALL EDGES .06 MAX.
3. FINISH YELLOW ANODIZED PER MIL-A-8625C TYP II
   GOLD OK
4. MAX. BOTTOM RADII .005.
5. ♦'S INDICATE KEY DIM TO BE CHECKED BY INCOMING Q.C.

DATED PRINT 12-1-97

408

| AUTOCAD DWG |
|---|
| R12 |
| FILE. 067440C.DWG |

THESE DRAWINGS AND SPECIFICATIONS ARE THE PROPERTY OF COBE BCT INC. AND SHALL NOT BE REPRODUCED, COPIED, OR USED FOR MANUFACTURE OR SALE OF APPARATUS WITHOUT WRITTEN PERMISSION OF COBE BCT INC.

TOLERANCES AND SYMBOLOGY PER ANSI Y14.5M-1982 DIMENSIONS SPECIFIED ARE AFTER ADDITIVE FINISH.

.X± ; .XX±.02 ; .XXX±.010 ; .XXXX± ; ANGLES ± 2° ; SURF. FINISH

DIMENSIONS ARE IN INCHES UNLESS OTHERWISE SPECIFIED

MATERIAL: ALUMINUM 6061-T6

ORIGINATOR: SCANNED — DATE
DRAWN: SCANNED — DATE

SIZE D | SCALE 2X | DO NOT SCALE DWG | THIRD ANGLE PROJECTION

COBE BCT
COBE BCT INC.
Blood Component Technology
a gambro company
1201 Oak Lakewood, Colorado 80215-4407 USA

TITLE: BASE, MOUNTING LEFT HAND LATCH

PART NO. 777067-440 | REV C | SHT 1 OF 1