REV	REVISION DESCRIPTION	BY	DATE	ECO #
A	ORIGINAL RELEASE	VLF	3/15/94	64526

NOTES:

1. DEBURR AND BREAK ALL EDGES.
2. FINISH: CHROMATE CONVERSION PER MIL-C-5541. CHROMATE ALL AROUND THEN PAINT INDICATED SIDES WITH LIGHT TEXTURE, COLOR TO MATCH PMS 425 (GRAY). OVERSPRAY IS PERMISSABLE. PAINT PER (921).
3. "COBE" LOGO TO BE SILKSCREENED. COLOR TO MATCH COBE LIGHT GRAY (POLANE T PLUS #F 63A184386). ARTWORK TO BE SUPPLIED BY COBE BCT INC. ARTWORK IS KEPT ON FILE AT COBE MDC.
4. ◆ MASK INDICATED SURFACE BEFORE PAINTING. SURFACE FINISH TO BE 63 OR BETTER.
5. MASK THREADS BEFORE PAINTING.
6. ◆'S INDICATE INSPECTION CRITERIA.

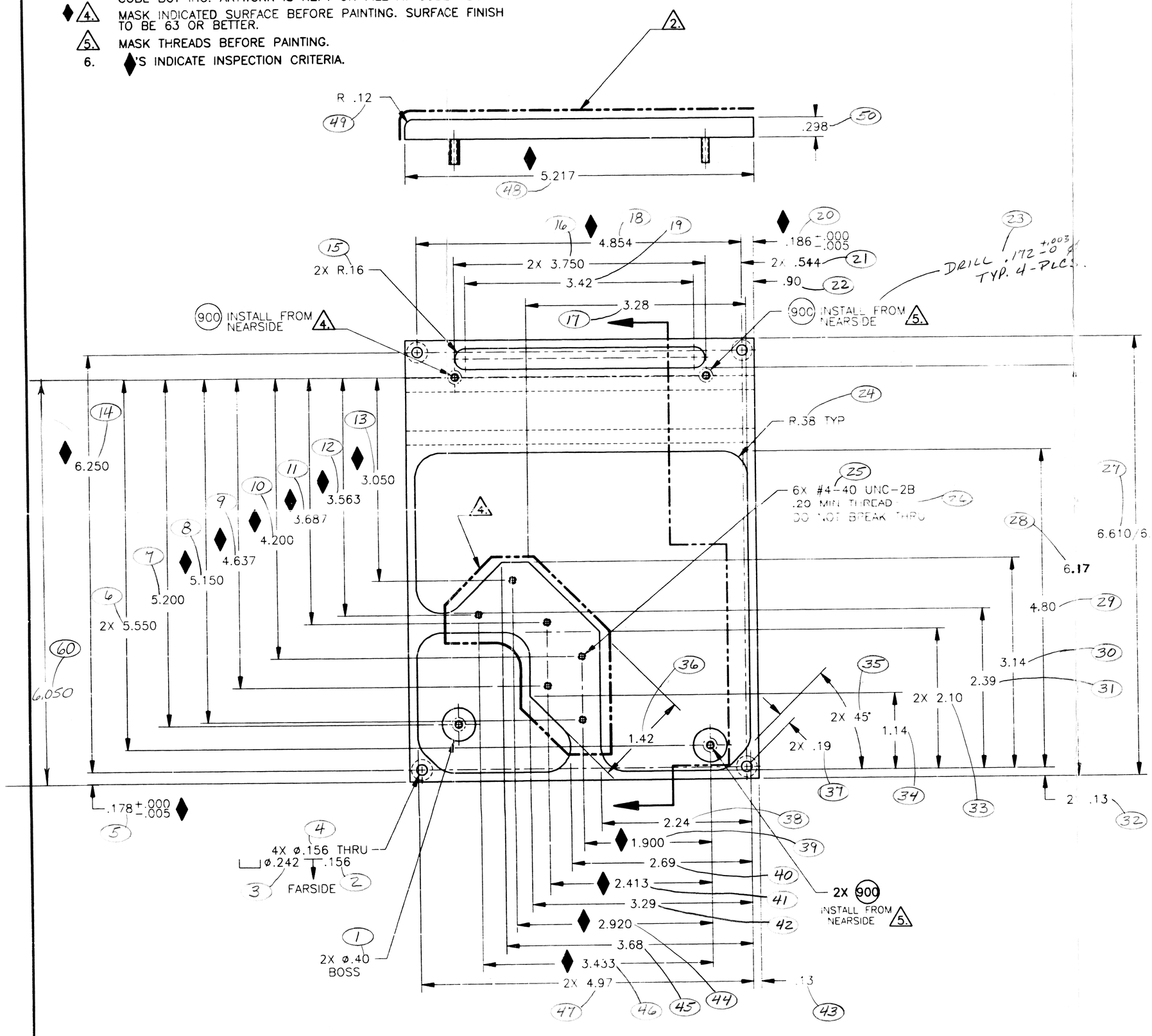

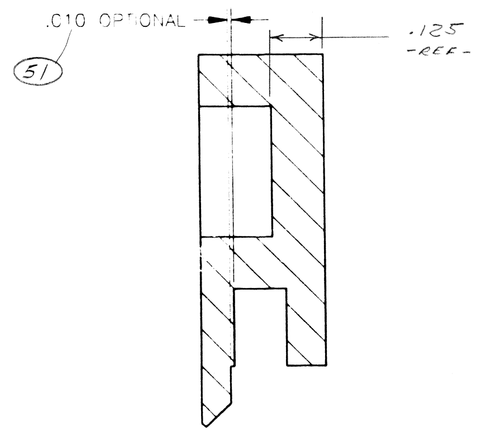

DETAIL 1

SCALE 4:1

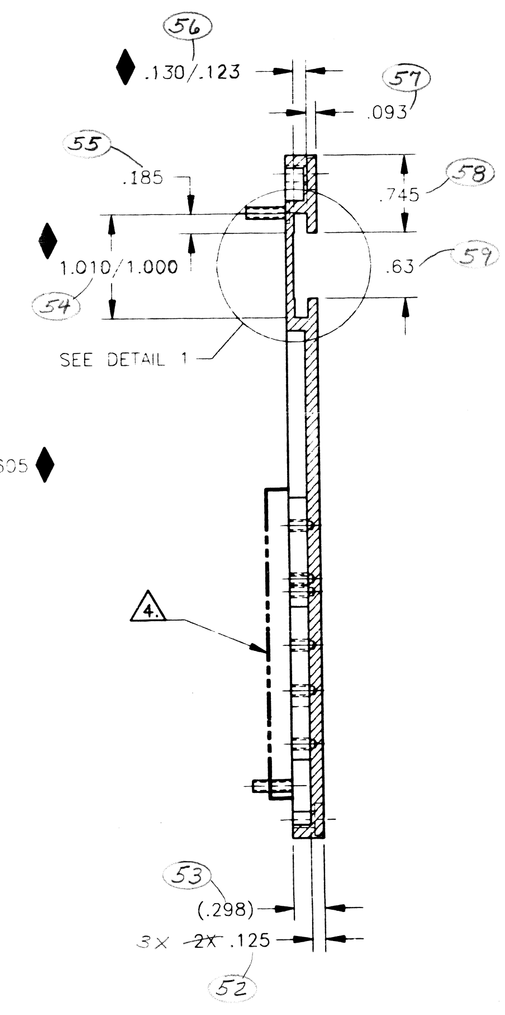

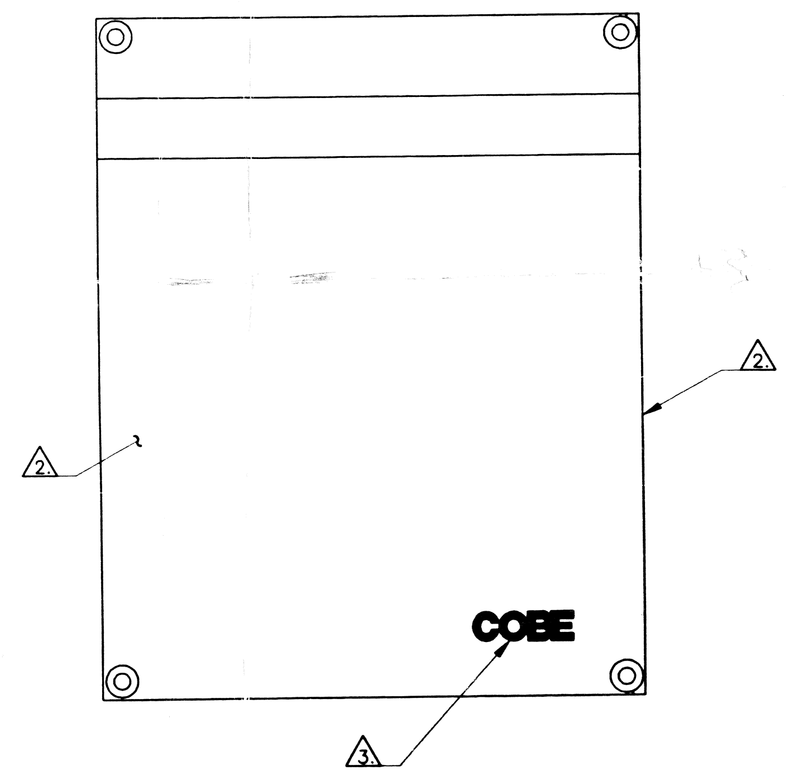

ITEM	QTY	U/M	PART NUMBER	DESCRIPTION
922	1	EA	777067-653	ARTWORK: COBE LOGO
921	1	EA	777067-641	SPEC. PAINT

BILL OF REFERENCE

ITEM	QTY	U/M	PART NUMBER	DESCRIPTION
900	4	EA	CHC-440-6	STUD, SELF-CLINCHING, CONCEALED HEAD #4-40 X .375 LONG.

BILL OF EQUIPMENT

DATED PRINT 12-15-95

THESE DRAWINGS AND SPECIFICATIONS ARE THE PROPERTY OF COBE BCT INC AND SHALL NOT BE REPRODUCED, COPIED, OR USED FOR MANUFACTURE OR SALE OF APPARATUS WITHOUT WRITTEN PERMISSION OF COBE BCT INC.

TOLERANCES AND SYMBOLOGY PER ASME Y14.5M-1982. DIMENSIONS SPECIFIED ARE AFTER ADDITIVE FINISH.

X ± .1 | XX ± .01 | XXX ± .005 | XXXX ± .0001 | ANGLES ± 5° | SURF. FINISH 125

DIMENSIONS ARE IN INCHES UNLESS OTHERWISE SPECIFIED

MATERIAL: ALUMINUM 6061-T651

ORIGINATOR: B. WHITE 05/13/93

DRAWN: R. MORRIS 05/13/93

SIZE: D | SCALE: 1:1 | DO NOT SCALE DWG | THIRD ANGLE PROJECTION

COBE BCT — COBE BCT INC. Blood Component Technology, a gambro company. 1201 Oak Lakewood, Colorado 80215-4407 USA

TITLE: PLATE: RIGHT SIDE SEAL SAFE

PART NO. 777067-686 | REV A | SHT 1 OF 1

AUTOCAD DWG
ORIG DISK: /arel/77/
FILE: 7067686.DWG

408