GENERAL SPECIFICATIONS FOR ANODIZED PART
PER MIL-A-8625C
1. COLOR BLACK TYPE III (900)
2. PERFORMANCE CHARACTERISTICS
A. PURPOSE OF COATING
■ DECORATIVE
■ CORROSION RESISTANCE
□ OTHER
B. CRITICAL PART SURFACE
■ CLASS A APPLIES IN NOTED PLACES SEE NOTE 6
◪ CLASS D APPLIES NO COSMETIC REQUIREMENTS.
□ CLASS APPLIES IN PLACE(S). SEE NOTE
C. SEALING(IF UNSPECIFIED,SEAL WITH WATER)
■ OTHER SEALANT REQUIRED. SPECIFY: NICKEL ACETATE
3. PROCESS
A. RACKING POINTS(ANODIZER'S DISCRETION UNLESS SPECIFIED)
■ RACK ONLY WHERE SHOWN. SEE NOTE 7
B. MASKING OF HOLES
□ DO NOT MASK
■ MASKING REQUIRED IN 1 PLACES SEE NOTE 4
NOTE: GAUGES TO BE USED AFTER COATING, WHETHER MASKED OR NOT.
4. Q.C. INSPECTION CRITERIA
A ■ SAMPLING PLAN ACCEPTABLE (AQL 1.5).

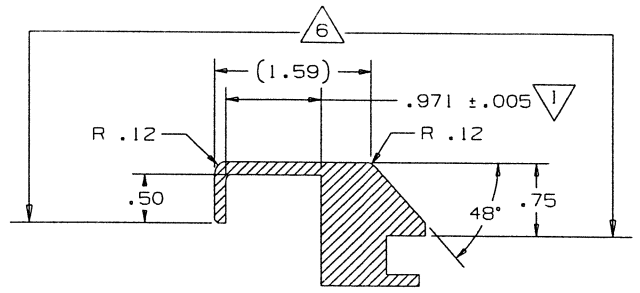

SECTION A-A
SCALE 1/1

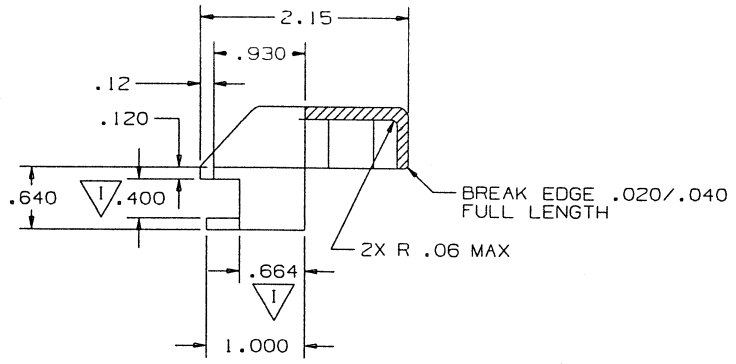

SECTION B-B
SCALE 1/1

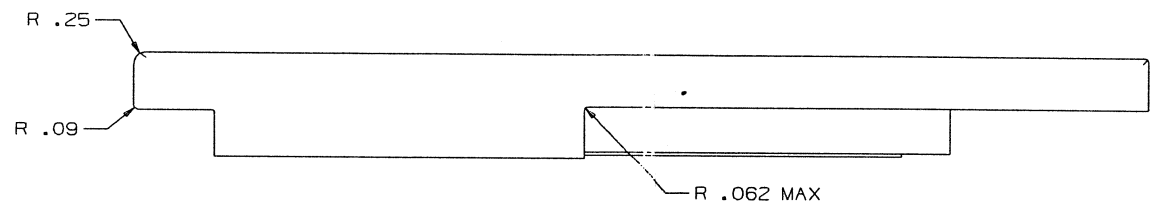

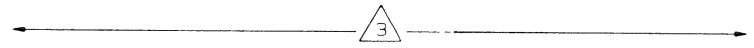

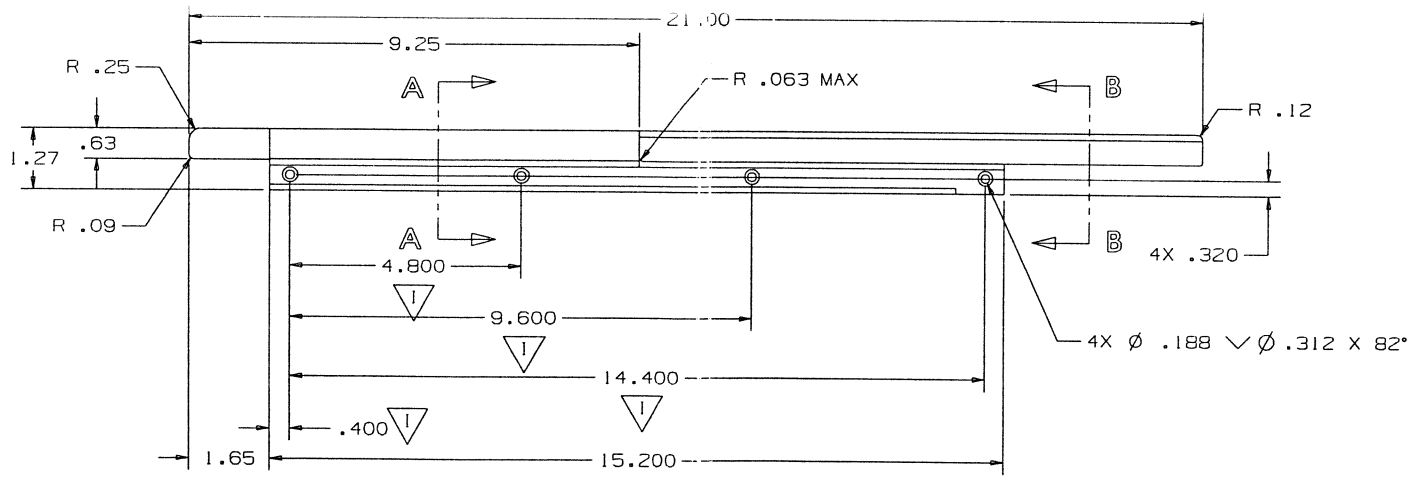

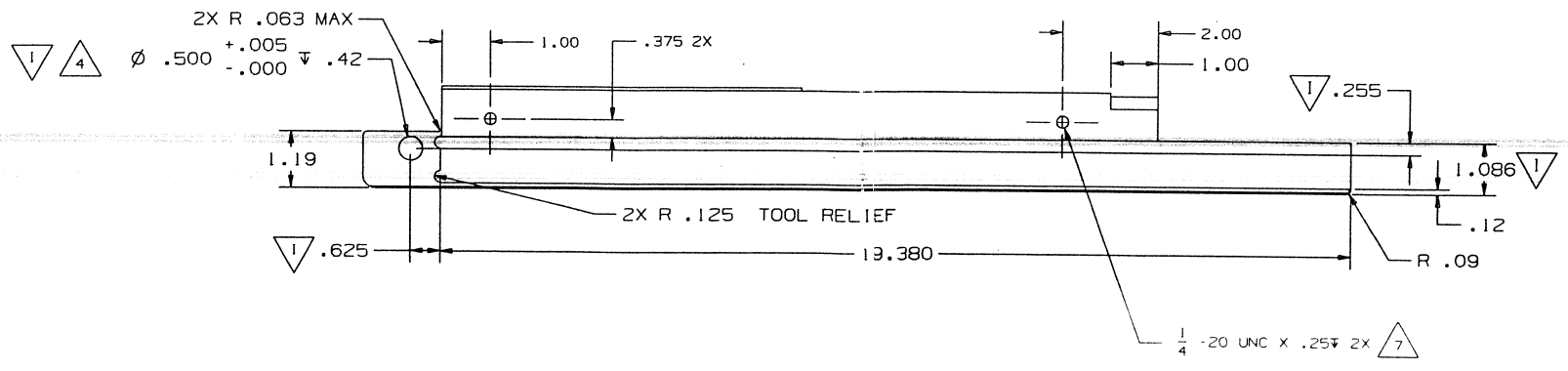

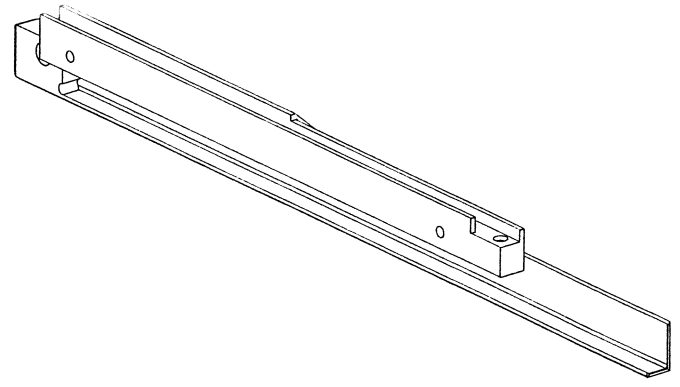

DUPLICATE 9-30-05 408

REV	REVISION DESCRIPTION	BY	DATE	ECO #
A	ORIGINAL RELEASE: REPLACES 777066-993 & 777067-112	SC	5/4/90	49217
B	ADD I.Q.C.NOTES:ADD TOP VIEW ADD TOOL RELIEF.	DL	8/17/90	50934
C	MADE CAD DWG CORRECTIONS	DL	8/13/90	51198
D	DIM 9.25 WAS 9.36; ADDED SOURCE CONTROL INFORMATION	SC	10/3/90	52219
E	REMOVE BACK OF ARM	DL	11/21/90	52567
F	ADDED ITEM 901 AND SEALANT	SC	8/06/99	BCT 006276
G	REMOVED SOURCE CONTROL NOTE; .12 WAS .134	DB	8/16/99	BCT 006321
H	CORRECTED MODEL FLANGE, Ø.187 WAS .170	DB	7/10/00	BCT 007869
J	.625 WAS .595	REM	7/23/01	BCT009345
K	ADDED 1/4-20 UNC X .25 DEEP HOLES FOR ANODIZATION RACKING; ADDED NOTE 7.	AR	02/28/05	BCT014736

NOTES:

1. BREAK ALL SHARP EDGES & CORNERS .010-.040
2. [illegible]
3. GRAIN EXTERIOR SURFACES AS SHOWN
4. MASK INDICATED HOLES PRIOR TO ANODIZE
5. ▽ INDICATES ITEMS TO BE CHECKED BY INCOMING Q.C.
6. CLASS A FINISH IN INDICATED AREA PER ITEM 900
7. HOLES USED FOR ANODIZATION RACKING

ITEM NO.	QTY	U/M	PART NO.	DESCRIPTION
901	1	EA	377004-004	TEST, BLEACH, RESISTANCE
900	1	EA	468311-001	SPEC.,ANODIZE

BILL OF REFERENCE

THESE DRAWINGS AND SPECIFICATIONS ARE THE PROPERTY OF GAMBRO BCT INC. AND SHALL NOT BE REPRODUCED, COPIED, OR USED FOR MANUFACTURE OR SALE OF APPARATUS WITHOUT WRITTEN PERMISSION OF GAMBRO BCT INC.

10811 Collins Avenue, Lakewood, Colorado 80215 4440 USA
GAMBRO BCT

TOLERANCES AND SYMBOLOGY PER ANSI Y14.5M-1982 DIMENSIONS SPECIFIED ARE AFTER ADDITIVE FINISH.
.X± .00
.XX± .02
.XXX± .010
.XXXX± .0000
ANGLES ± 3°
SURF. FINISH 125

DIMENSIONS ARE IN INCHES UNLESS OTHERWISE SPECIFIED

MATERIAL: ALUMINUM 6061-T6

TITLE: ARM, FRAME, LEFT HAND

ORIGINATOR | DATE
DRAWN: S CROSS | DATE 3/13/90

SIZE D | SCALE 1/2 | DO NOT SCALE DWG | THIRD ANGLE PROJECTION

PART NO. 777067-142 | REV K | SHT 1 OF 1

UNIGRAPHICS