NOTES

1. BREAK ALL SHARP EDGES AND CORNERS.
2. ▽ INDICATES FEATURE/DIMENSION TO BE CHECKED AT INCOMING INSPECTION.

REV	REVISION DESCRIPTION	BY	DATE	ECO #
1	INITIAL RELEASE	KMK	03/20/08	031208KK
A	ALPHA RELEASE TO MDC	KMK	03/03/10	BCT027234

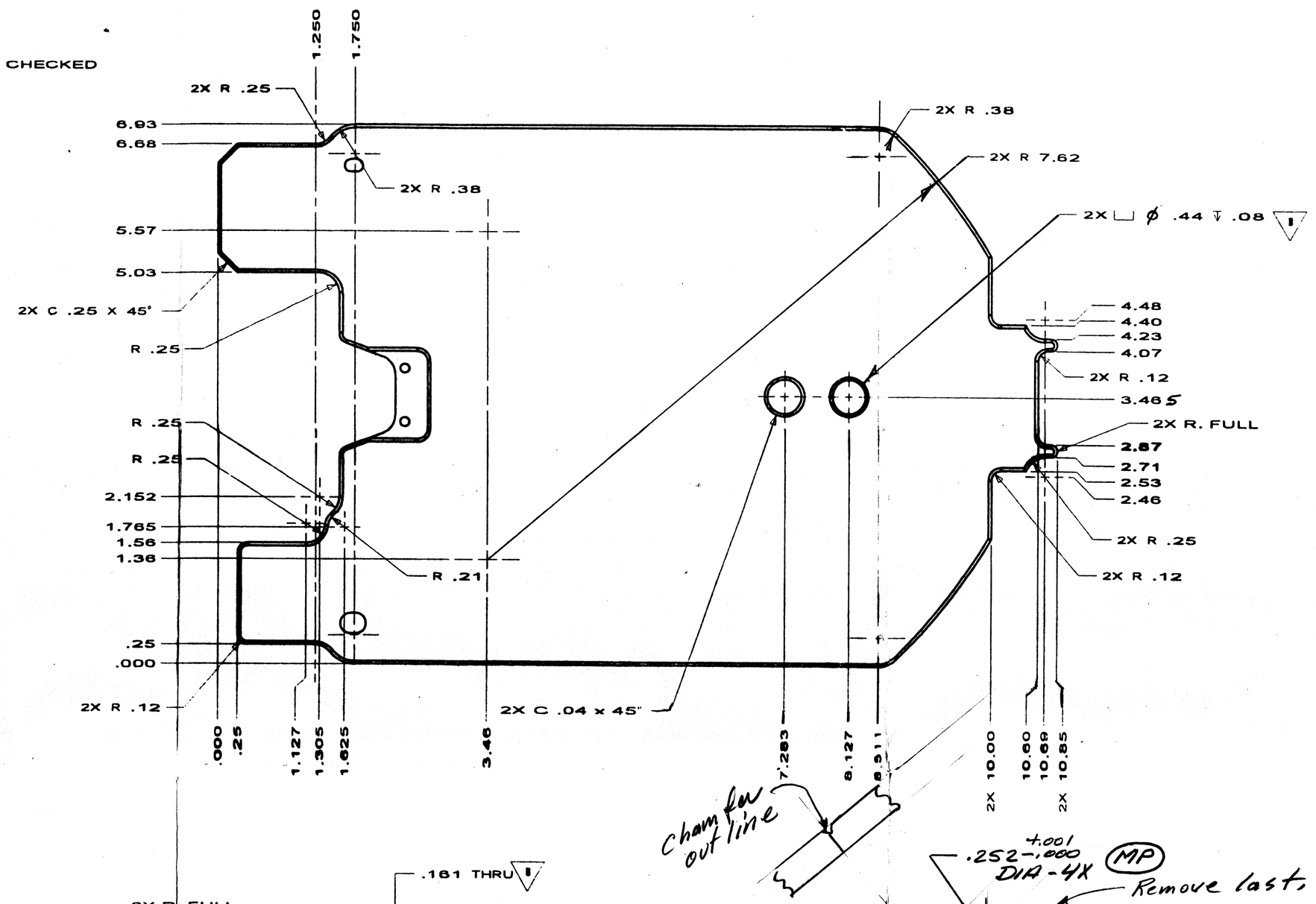

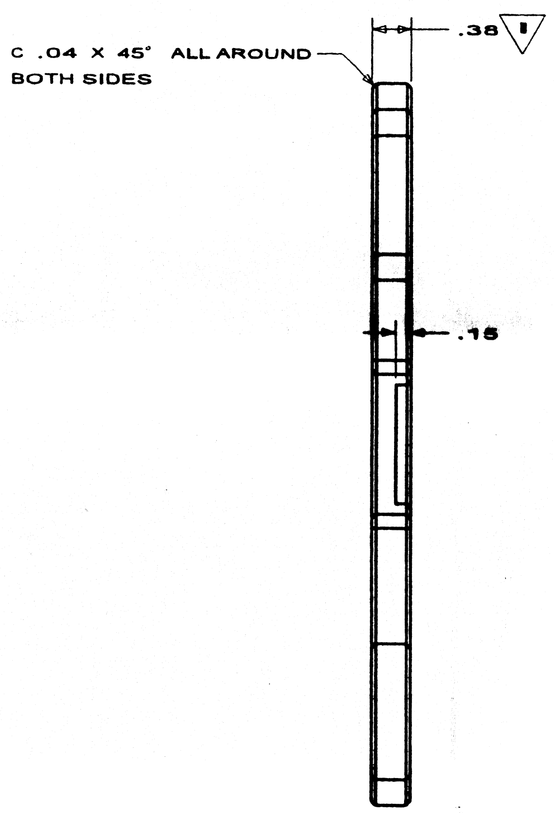

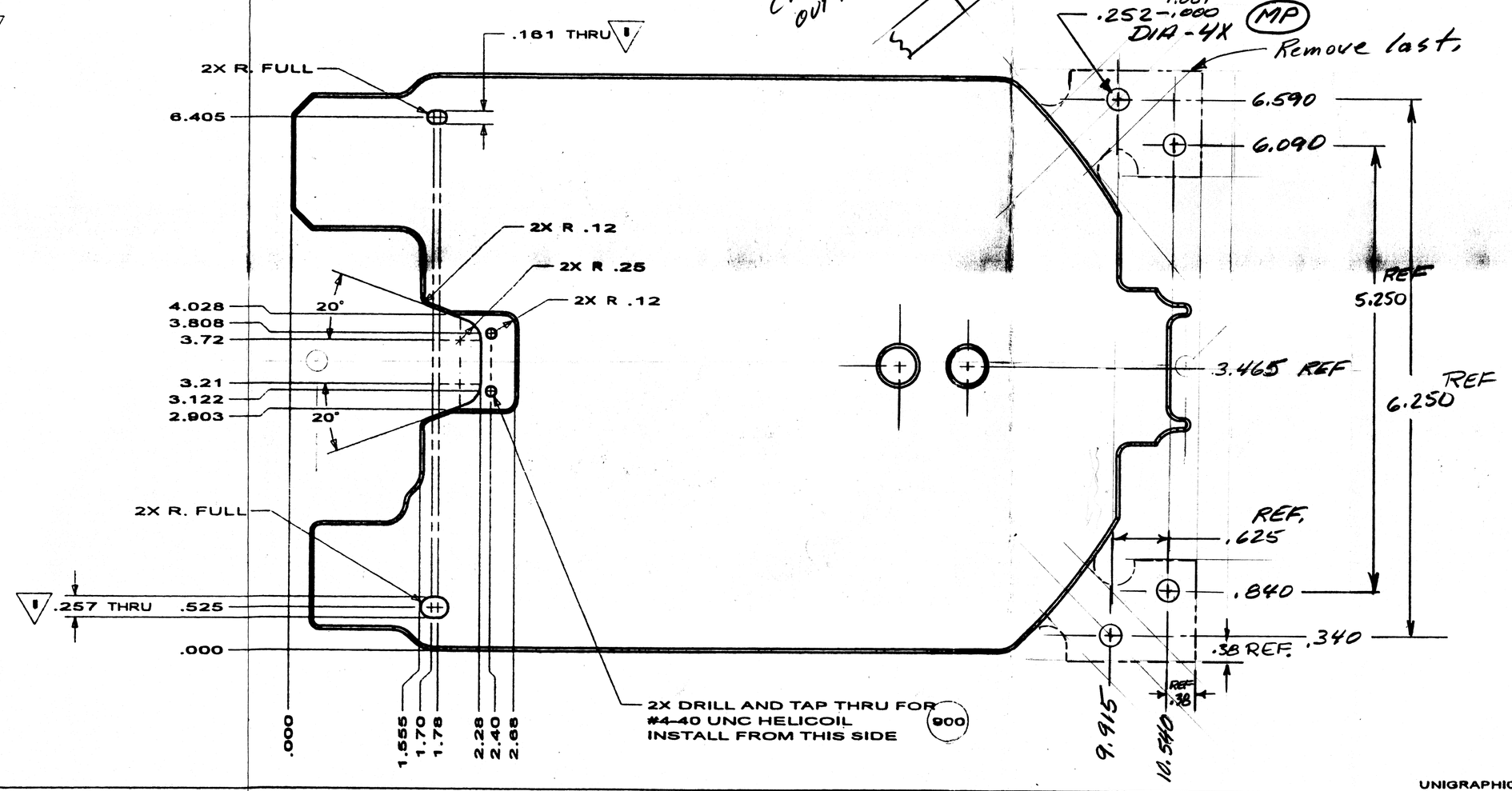

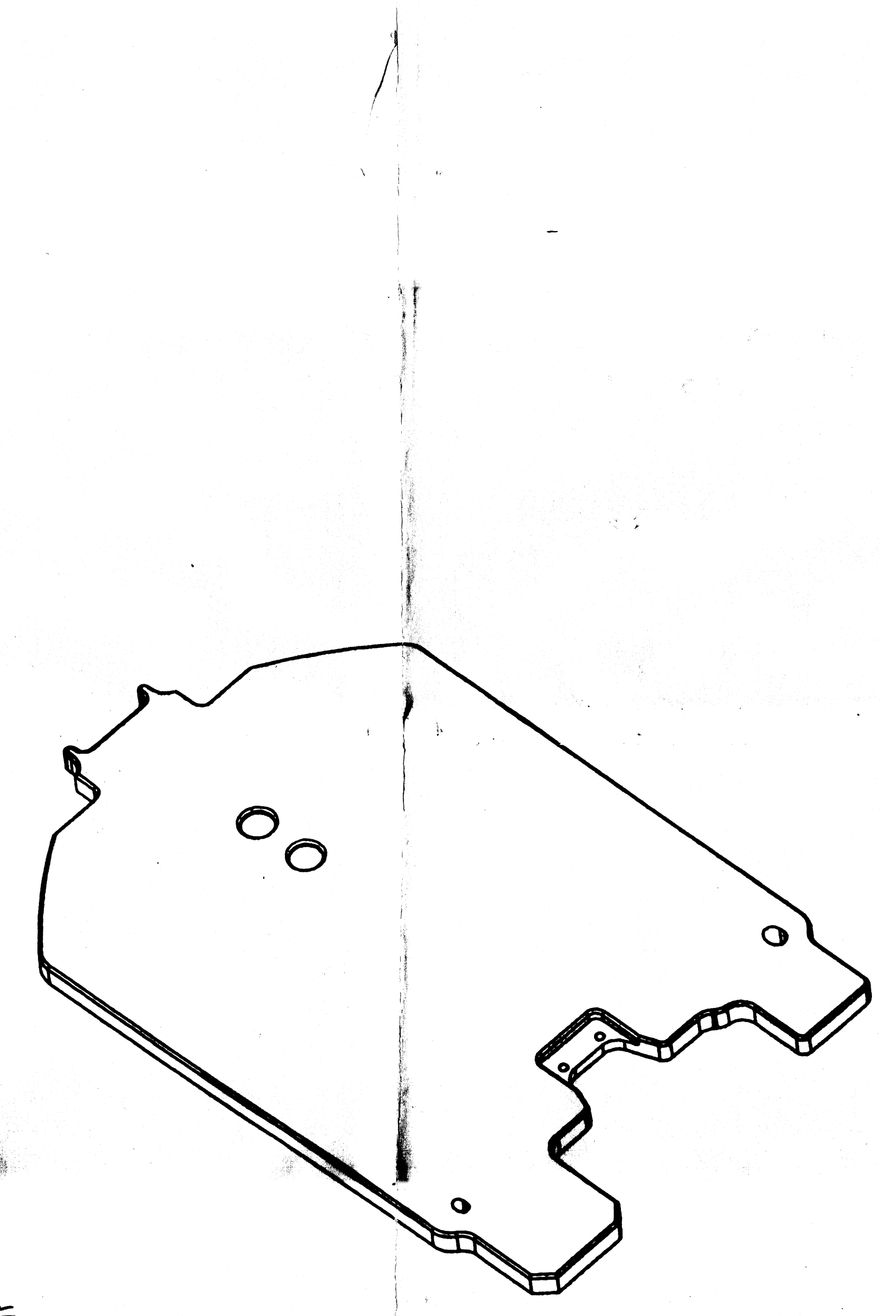

REFERENCE: TECAPRO "MT" MATERIAL DENSITY = 0.92 g/cm^3

THIS 0.38" THICK PLATE = 343g

2-23-11 408

ITEM NO.	QTY	U/M	PART NO.	DESCRIPTION
900	2	EA	779212-211	INSERT, HELICOIL, SST, STD.

BILL OF REFERENCE

CaridianBCT
10611 Oakins Avenue
Lakewood, Colorado 80215-5444
USA

TOLERANCES FOR STANDARD PRACTICE UNLESS OTHERWISE SPECIFIED AFTER ANODIZING PLATING

.X± 0.04
.XX±0.010
.XXX±0.005
.XXXX±0.0020

ANGLES ±
SURF. FINISH 125RMS

ENGINEERING ARE IN INCHES UNLESS OTHERWISE SPECIFIED

MATERIAL
TECAPRO "MT" WHITE

ORIGINATOR
DATE

TITLE
TEST BAG, SIMULATOR

SIZE D | SCALE 1:1 | DO NOT SCALE DWG | THIRD ANGLE PROJECTION

DRAWN R. KLIMEK | DATE 03/03/10

PART NO. 879105-125 | REV A | SHT 1 OF 1

UNIGRAPHICS