NOTES:
1. REMOVE ALL BURRS AND BREAK SHARP CORNERS.
2. FINISH- ANODIZE PER MIL-A-8625F, TYPE II, CLASS 2, DYED BLACK WITH A NICKEL ACETATE SEAL.
3. INDICATES FEATURE / DIMENSION TO BE CHECKED AT INCOMING INSPECTION.

REV	REVISION DESCRIPTION	BY	DATE	ECO #
A	INITIAL RELEASE	TP	01/31/11	BCT 029910
B	ADDED HELI-COILS, FLATNESS AND INSPECTIONS FLAGS	TP	05/04/11	BCT 030709

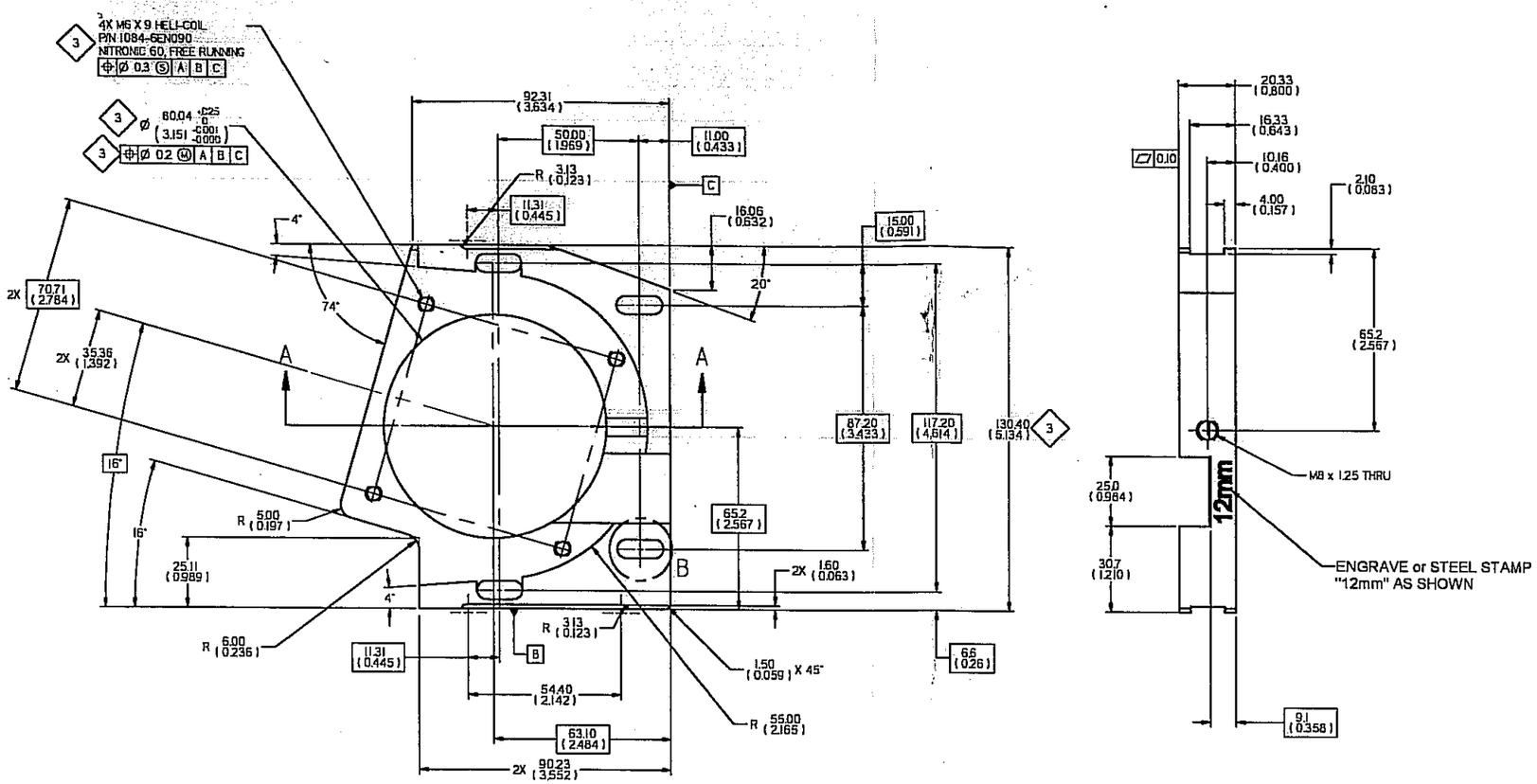

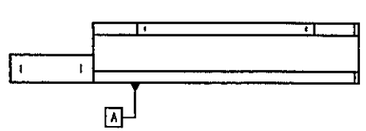

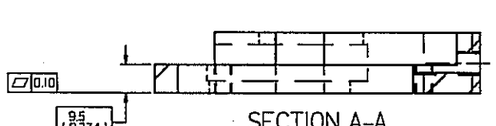

SECTION A-A

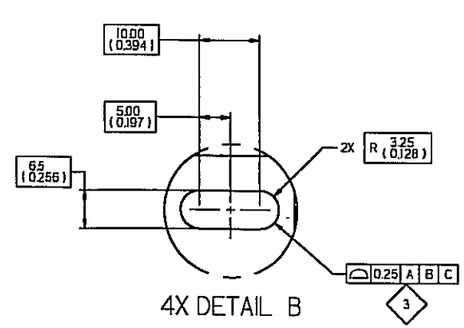

4X DETAIL B

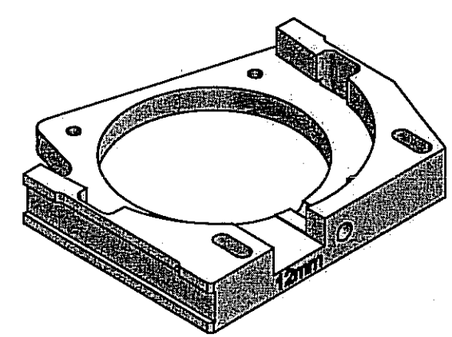

4-6-12 408

THESE DRAWINGS AND SPECIFICATIONS ARE THE PROPERTY OF CARIDIAN BCT, INC. AND SHALL NOT BE REPRODUCED, COPIED OR USED FOR MANUFACTURE OR SALE OF APPARATUS WITHOUT WRITTEN PERMISSION OF CARIDIAN BCT, INC.

TOLERANCES PRESENT WHEN PER ANSI Y14.5M-1982 DIMENSIONS SPECIFIED ARE AFTER ADDITIVE FINISH
X.X ± 1.0
X.XX ± 0.2
X.XXX ± 0.10
X.XXXX ± 0.050
ANGLES ± 1°
SURFACE FINISH 1.6

DIMENSIONS ARE IN mm UNLESS OTHERWISE SPECIFIED

MATERIAL: Aluminum, 6061-T6

DRAWN: T. PEARCE DATE 04/13/10
CHECKED: T. PEARCE DATE 04/13/10

SIZE D SCALE 1:1 DO NOT SCALE DWG

SOLID EDGE Version 20

CaridianBCT
10811 West Collins Avenue
Lakewood, Colorado 80215-4440
USA

TITLE: PLATE, MOTOR MOUNTING

PART NO. 986350-301 REV B SHEET 1 OF 1