1. FINISH: CHROMATE CONVERSION COAT PER MIL-C-5541, CLASS 1
2. ♦'s INDICATES KEY DIMENSIONS TO BE VERIFIED AT INCOMING INSPECTION.

REV	REVISION DESCRIPTION	BY	DATE	ECO #
D	CONVERTED TO ACAD	*MA	10/28/93	58237
E	RENUMBERED NOTES 3&4 WAS 2&3,ADDED 2.05 MAX & 1.53 MAX TO MACHINE DWG. ADDED ♦ AND NEW NOTE 2	VLF	2/16/94	58465

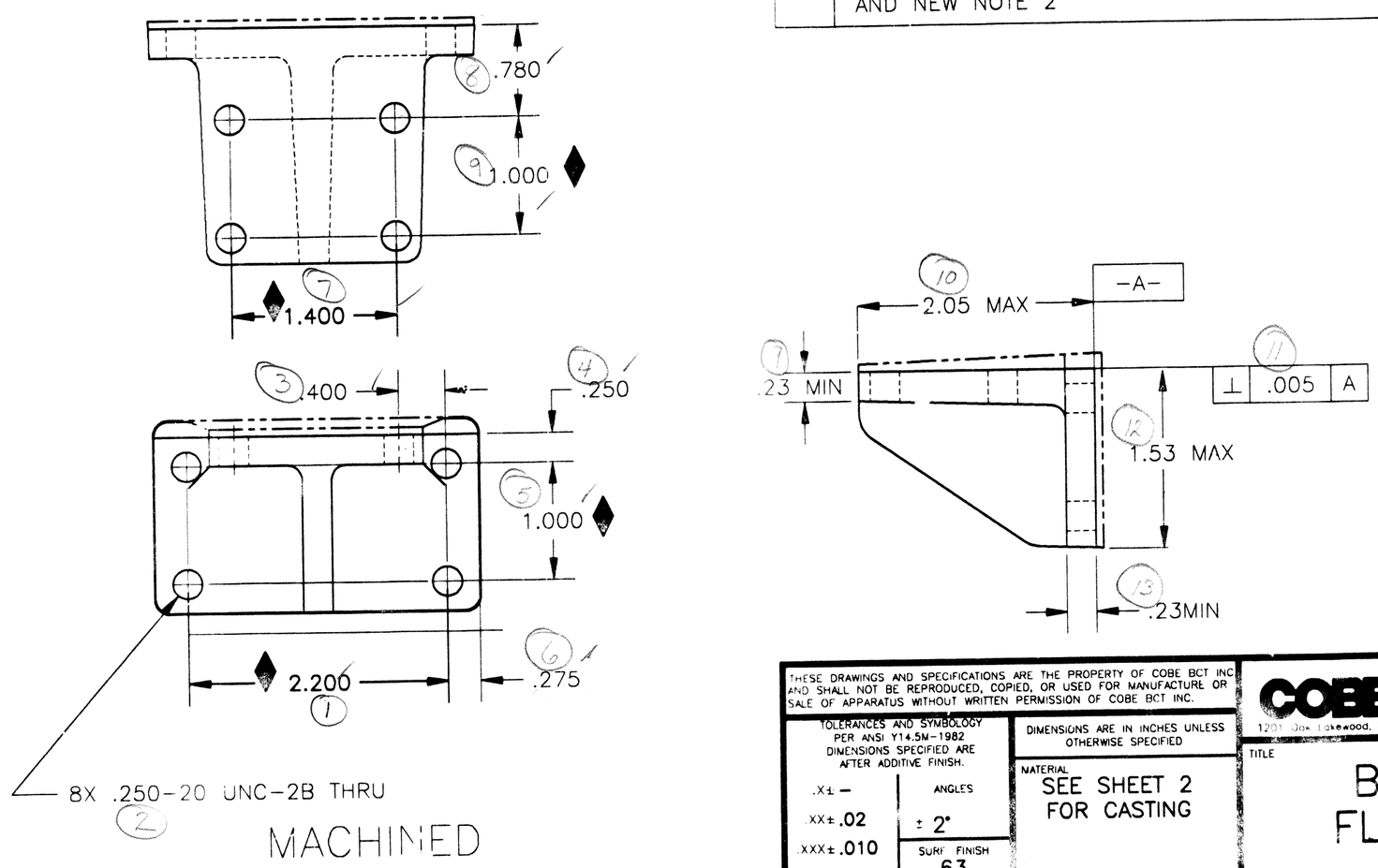

THESE DRAWINGS AND SPECIFICATIONS ARE THE PROPERTY OF COBE BCT INC. AND SHALL NOT BE REPRODUCED, COPIED, OR USED FOR MANUFACTURE OR SALE OF APPARATUS WITHOUT WRITTEN PERMISSION OF COBE BCT INC.

TOLERANCES AND SYMBOLOGY PER ANSI Y14.5M-1982 DIMENSIONS SPECIFIED ARE AFTER ADDITIVE FINISH.
.X± –
.XX± .02
.XXX± .010
.XXXX± –
ANGLES ± 2°
SURF. FINISH 63

DIMENSIONS ARE IN INCHES UNLESS OTHERWISE SPECIFIED

MATERIAL: SEE SHEET 2 FOR CASTING

ORIGINATOR: C. HAKE — DATE: 09/22/93
DRAWN: C. HAKE — DATE: 09/22/93

SIZE: B — SCALE: 1:1 — DO NOT SCALE DWG — THIRD ANGLE PROJECTION

COBE BCT — COBE BCT INC. Blood Component Technology a gambro company — 1201 Oak Lakewood, Colorado 80215-4407 USA

TITLE: BRACKET, FLH FRAME

PART NO. 777066-207 — REV E — SHT 1 OF 2

AUTOCAD DWG
ORIG DISK:
FILE: 7066207.DWG

Dated Print 6-2-97

3-8-94

408

3. 2 DEGREE MAXIMUM DRAFT ANGLE
4. CASTING TOLERANCES: .XX = +/- .05
.XXX = +/- .03

REV	REVISION DESCRIPTION	BY	DATE	ECO #
	SEE SHEET 1			

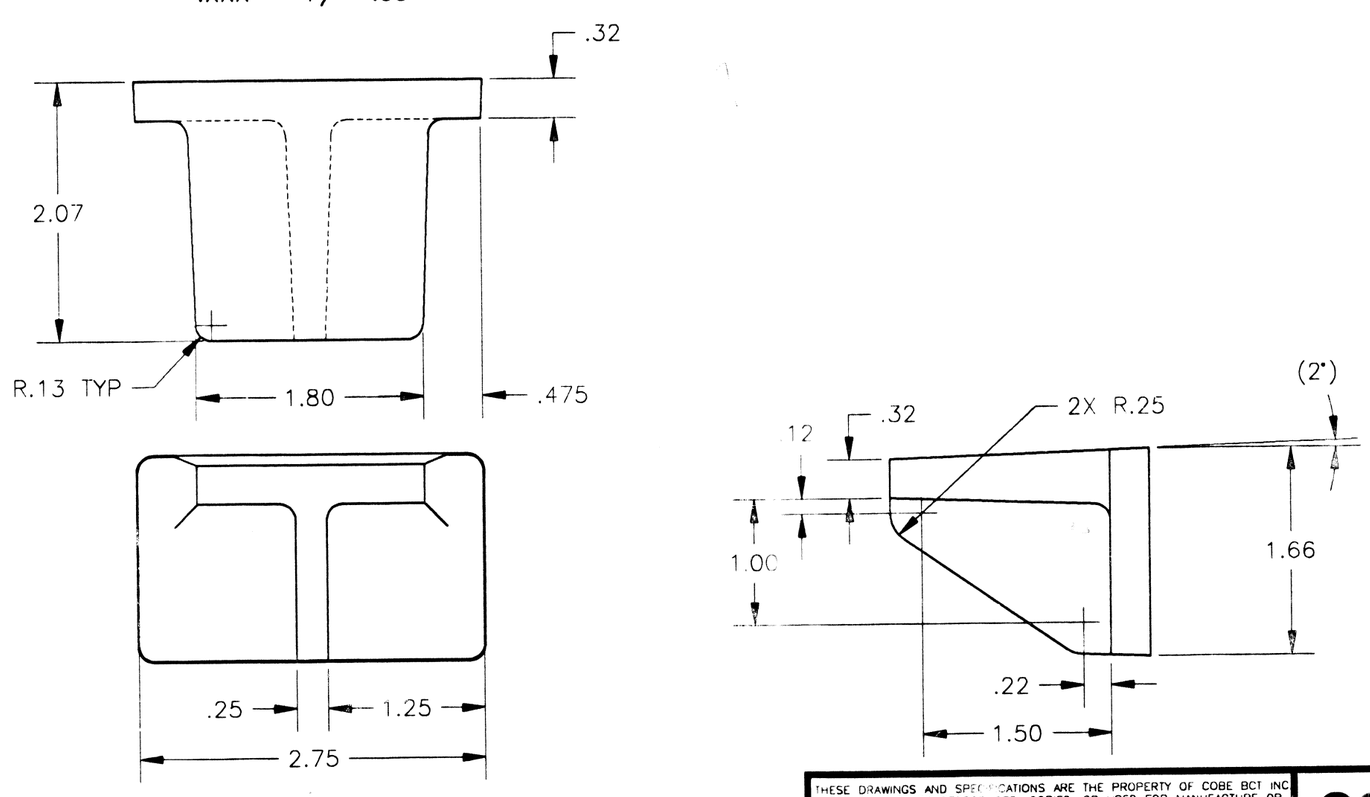

CASTING

THESE DRAWINGS AND SPECIFICATIONS ARE THE PROPERTY OF COBE BCT INC. AND SHALL NOT BE REPRODUCED, COPIED, OR USED FOR MANUFACTURE OR SALE OF APPARATUS WITHOUT WRITTEN PERMISSION OF COBE BCT INC.

TOLERANCES AND SYMBOLOGY PER ANSI Y14.5M-1982 DIMENSIONS SPECIFIED ARE AFTER ADDITIVE FINISH.
.X± –
.XX± –
.XXX± –
.XXXX± –
ANGLES ± –
SURF. FINISH

DIMENSIONS ARE IN INCHES UNLESS OTHERWISE SPECIFIED

MATERIAL: CAST ALUMINUM, ALLOY 713-F

ORIGINATOR: C. HAKE — DATE: 09/22/93
DRAWN: C. HAKE — DATE: 09/22/93

SIZE: B — SCALE: 1:1 — DO NOT SCALE DWG — THIRD ANGLE PROJECTION

COBE BCT — COBE BCT INC. Blood Component Technology a gambro company — 80215-4407 USA

TITLE: BRACKET, FLH FRAME

PART NO. 777066-207 — REV E — SHT 2 OF 2

AUTOCAD DWG
ORIG DISK:
FILE: 7066207.DWG

3-8-94