ECE 477 Design Review
Team 02 – Spring 2014

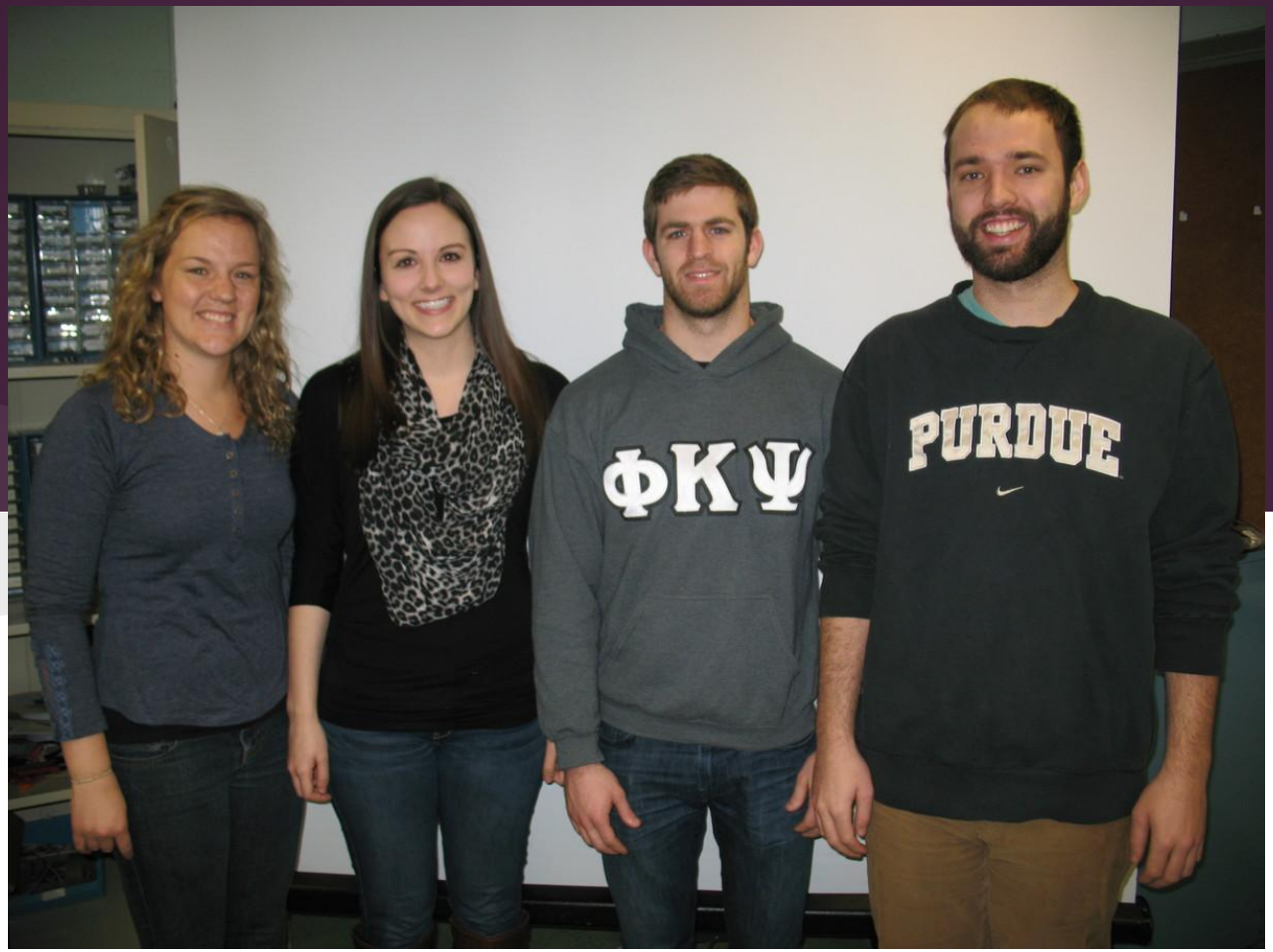

Courtney Laubach, Sophie Pouliquen, Matt McMunigle, Travis Jefferson

Outline

- **Project overview**
- **Project-specific success criteria**
- **Block diagram**
- **Component selection rationale**
- **Packaging design**
- **Schematic and theory of operation**
- **PCB layout**
- **Software design/development status**
- **Project completion timeline**
- **Questions / discussion**

Project Overview

- **The proposed design is an interactive DJ party system**
  - Accompanied web application allows users to vote for songs to be played
  - LED’s shine onto spinning disco ball controlled by the beat of the song selected
  - LCD displays current song information
  - Push buttons allow for user-controlled song interaction (skip, pause, etc.)

Project-Specific Success Criteria

1. An ability for a user-created webapp to communicate a selected song to the Raspberry Pi through an http request (API poll).
2. An ability for a computing PC (Raspberry Pi) to stream music through an audio streaming API and communicate the song information with the microcontroller.
3. An ability to create a ‘lights’ show corresponding the music beat, which will be sampled from the auxiliary out of the Raspberry Pi via the microcontroller ADC.

Project-Specific Success Criteria

4. An ability to control the direction and rotation speed of the disco ball through a motor which is controlled via the microcontroller PWM peripheral.

5. An ability to utilize an LCD to display user-selected (via a control device) metadata (e.g. audio options, light settings, and track information)

Block Diagram

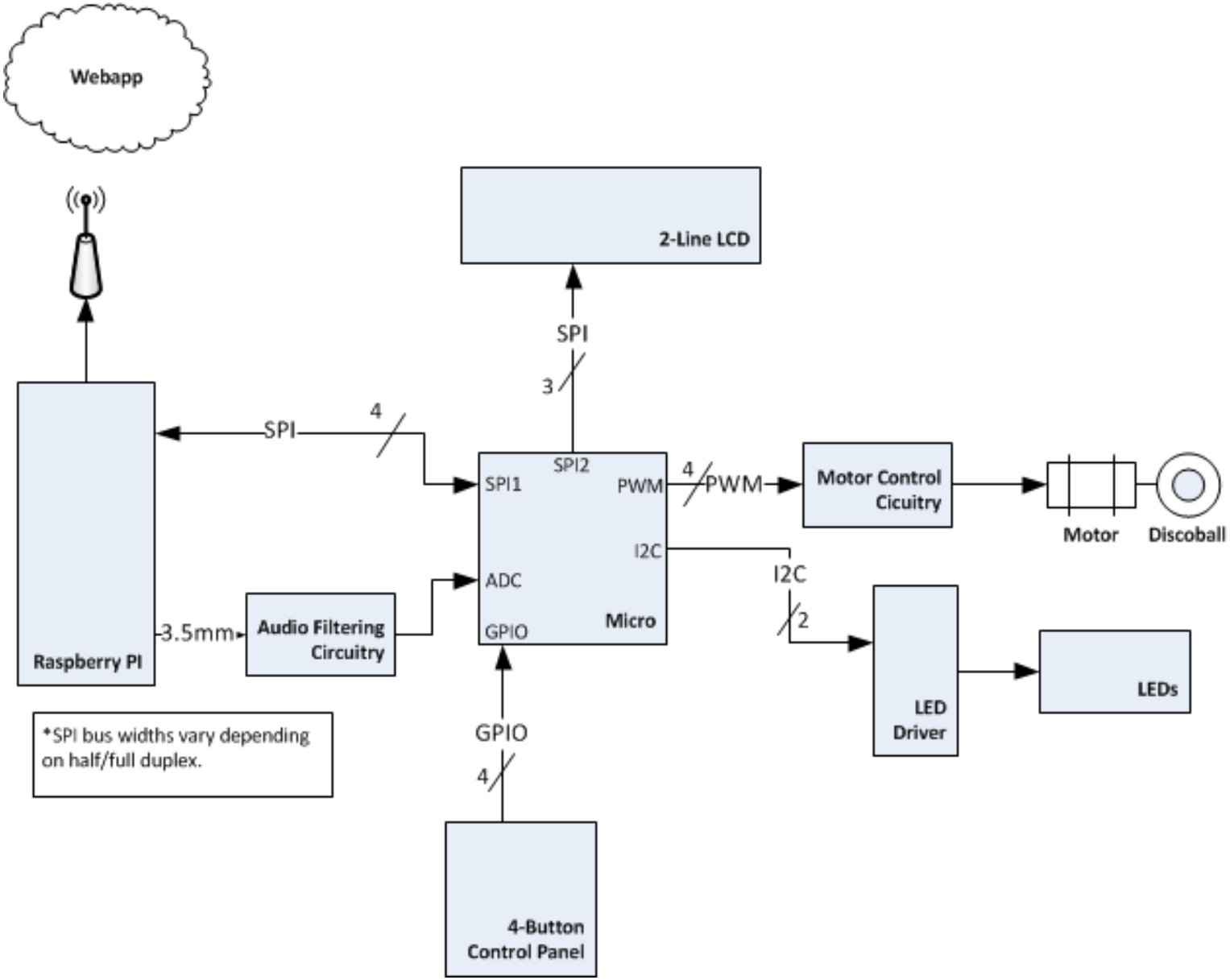

Component Selection Rationale

- **Components include**
  - Microcontroller
  - Onboard computer
  - LCD
  - LED’s with driver
  - Push buttons
  - Motor with driver
  - Power supply

Microcontroller Constraints

- **Required external peripherals**
  - 2 SPI (Raspberry Pi, LCD)
  - 1 I^2C (LED driver)
  - ADC (audio out)
  - PWM (motor)
  - Interrupt driven push buttons

- **Prefer 3.3V digital logic**
  - 5.0V Raspberry Pi has 3.3V digital logic out
  - LED driver and LCD run on 3.3V

Microcontroller Choices

Model	I/O Pins	Program Memory	Communication Peripherals	ADC	Price
MSP430F47177IPZR	68	92 KB	I^2C SPI UART	7 @16b	$11.26
PIC18F87J11	68	128 KB	I^2C SPI UART	12 @10b	$4.67

- **PIC18F87J11 selected for**
  - price - free samples
  - availability of prototyping board in lab

Other Choices

- **Onboard computer**
  - Raspberry Pi
    - wi-fi capable, serial connection to micro, output line audio, small
- **LCD**
  - NHD-2.23-12832UCB3
    - SPI interfacing, small enough to fit at base of design, double line, color
    - 3.3V, 100mA
- **LED's**
  - YSH-FRGBB-IA
    - 3 colors on each
    - LED driver (PCA9626)
    - 3.3V, 650mA

Other Choices

- **Push buttons**
  - Interrupt driven
- **Motor**
  - STP-MTR-23055
    - bipolar, small step size, small yet powerful, rotate 360 degrees
    - 12V, 1.2A
    - Motor Driver (L293DD)
- **Power Supply**
  - VEF50US12
  - 12V, 4.17A

Packaging Design

- **Requirements**
  - Relatively light weight
  - Easy to transport from one location to another
- **Materials**
  - Enclosure to hold the motor, PCB board, LCD display, and Raspberry Pi
  - Poles mounted on 4 corners to hold LEDs
  - 3D printed part: sits on top of motor to mount disco ball

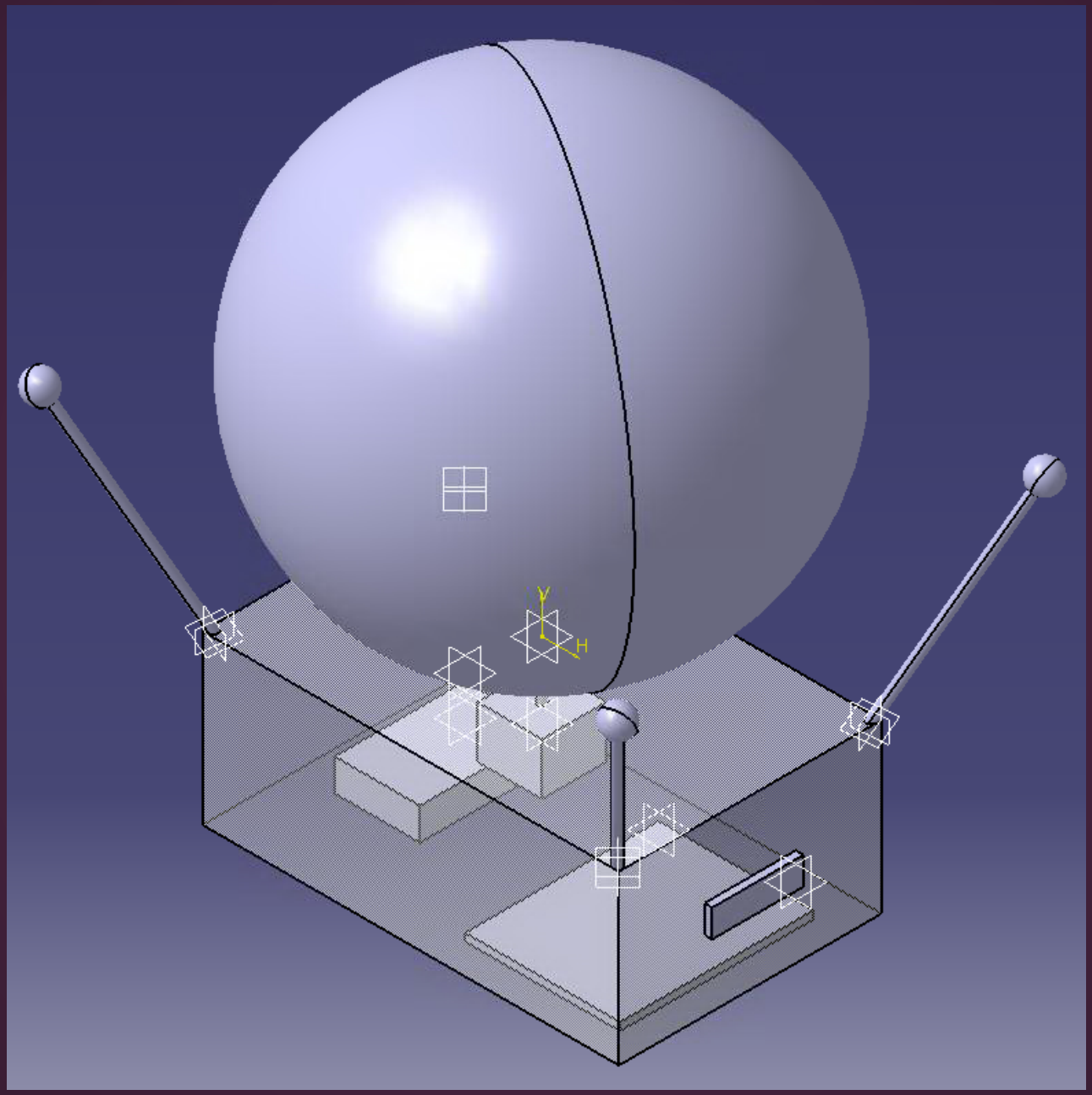
V
H

Theory of Operation

- **Microcontroller**
  - Controls the LED driver, motor driver, samples audio, LCD, and push buttons
- **Raspberry Pi**
  - Sends audio metadata to the micro
  - Streams audio to speakers
  - Talks with the webapp
- **User interaction**
  - Webapp
  - Push buttons

Schematic

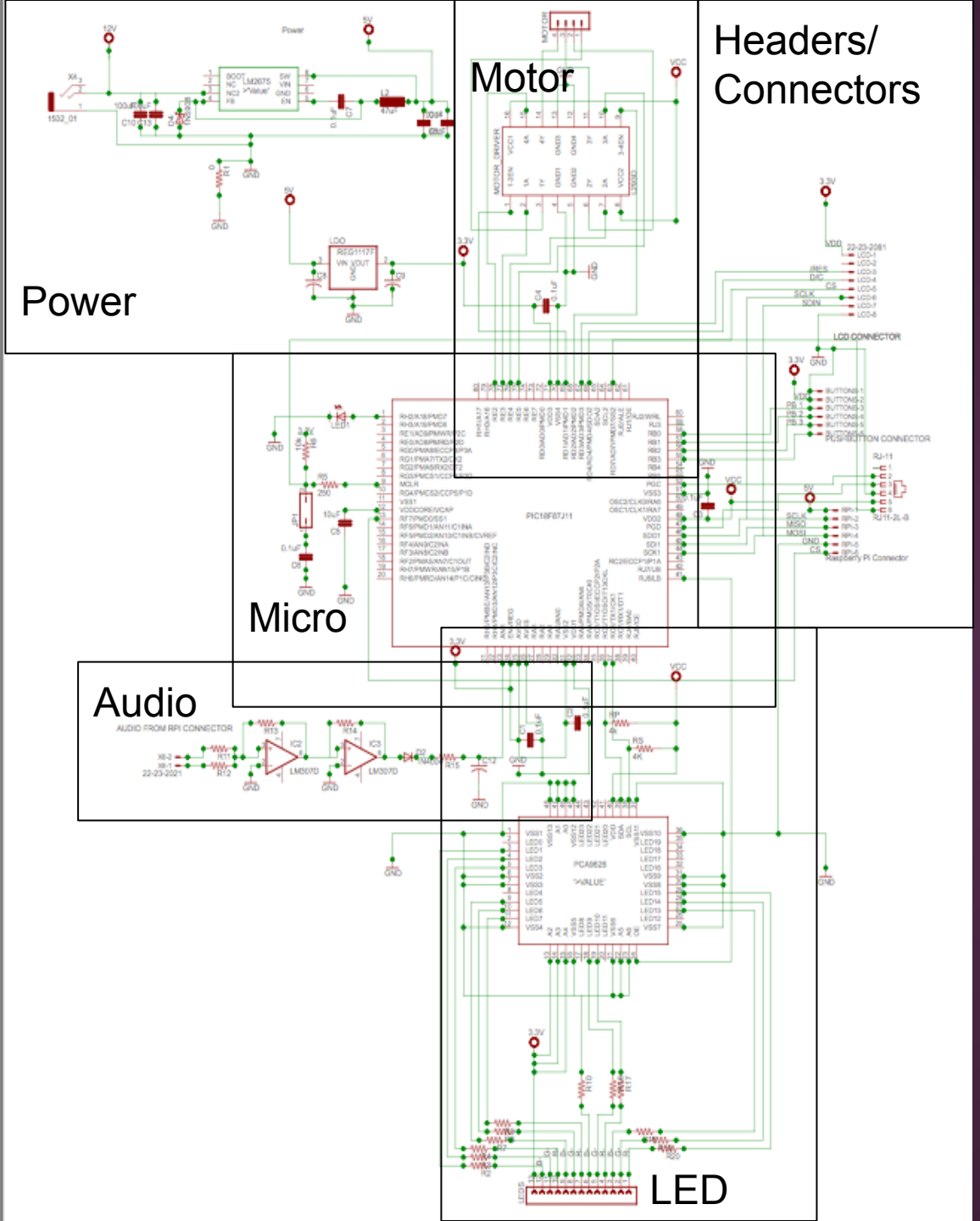

Microcontroller

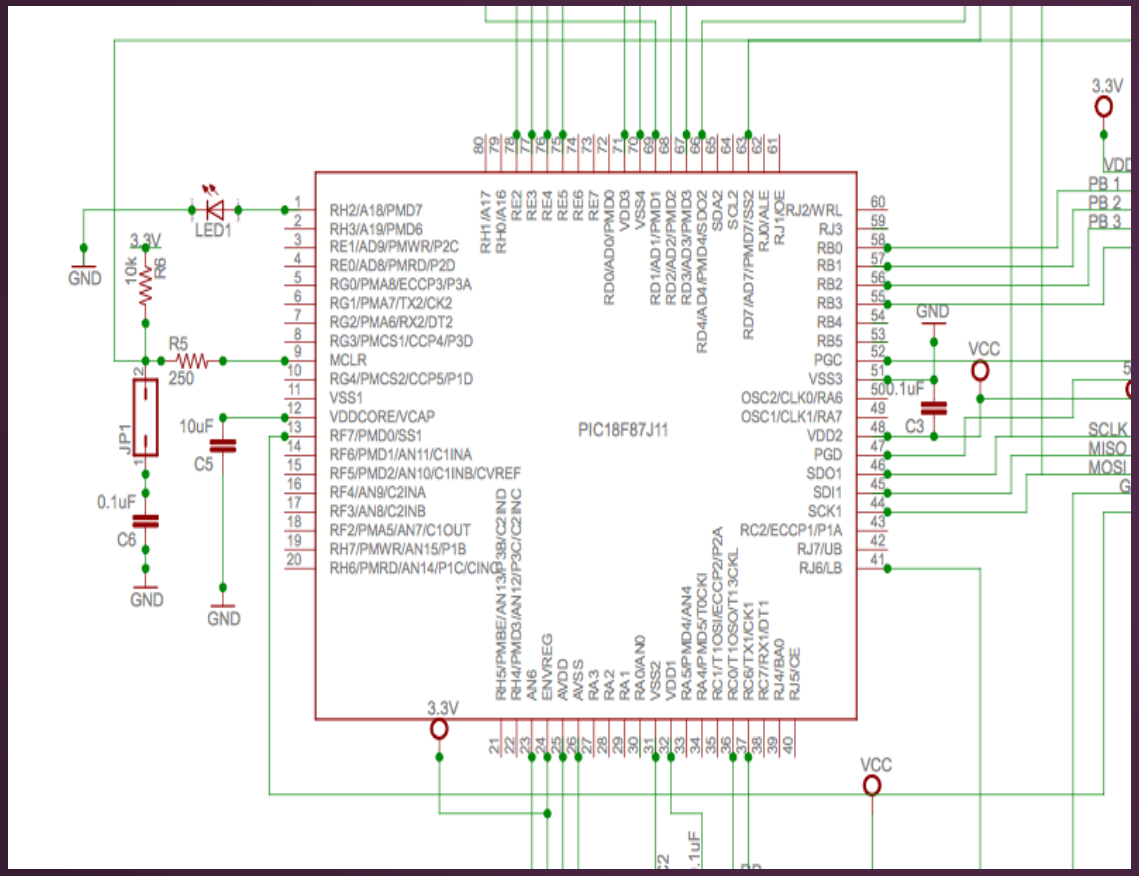

- Powered by 3.3 V
- Decoupling Capacitors
- Flashing “heartbeat” LED
- MCLR connections
- On-chip oscillator

Power Circuit

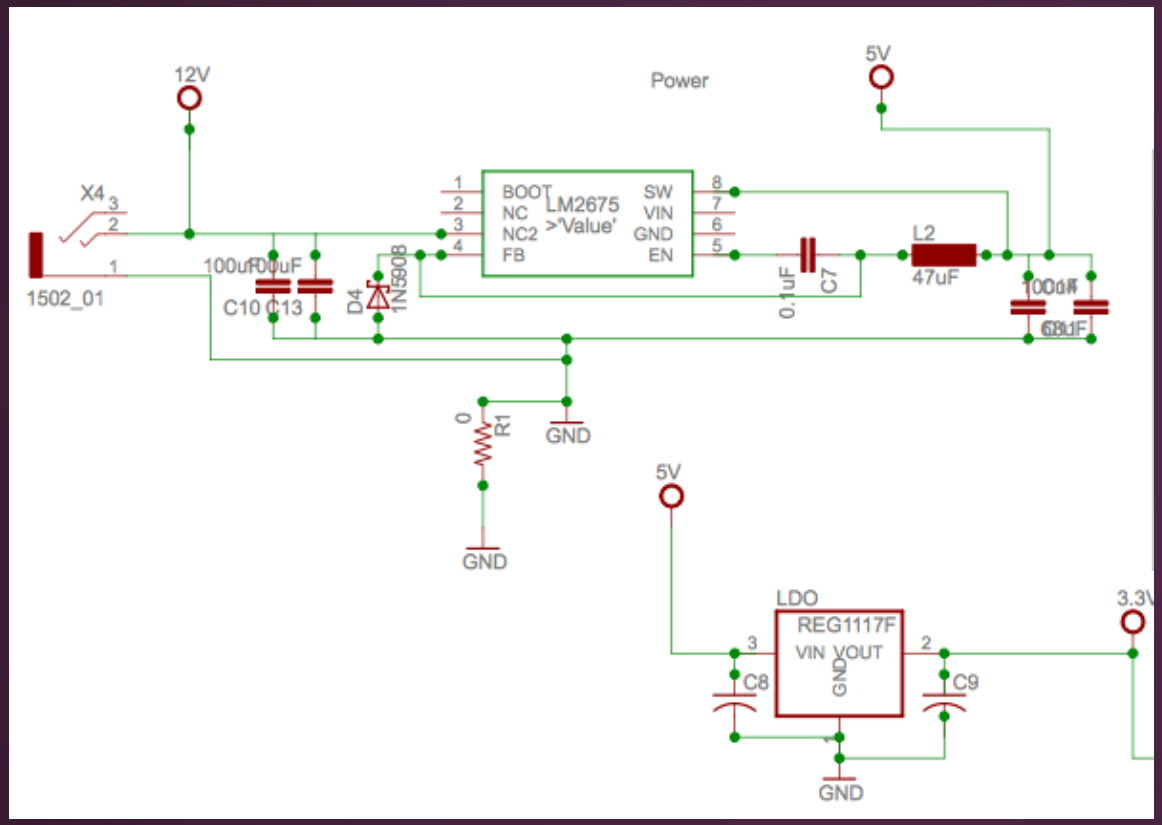

- LM2675: switch mode regulator (12V -> 5V)
- Capacitors in parallel
- LM 1117: low dropout regulator (5V -> 3.3V)
- 12V DC power supply

Motor Driver

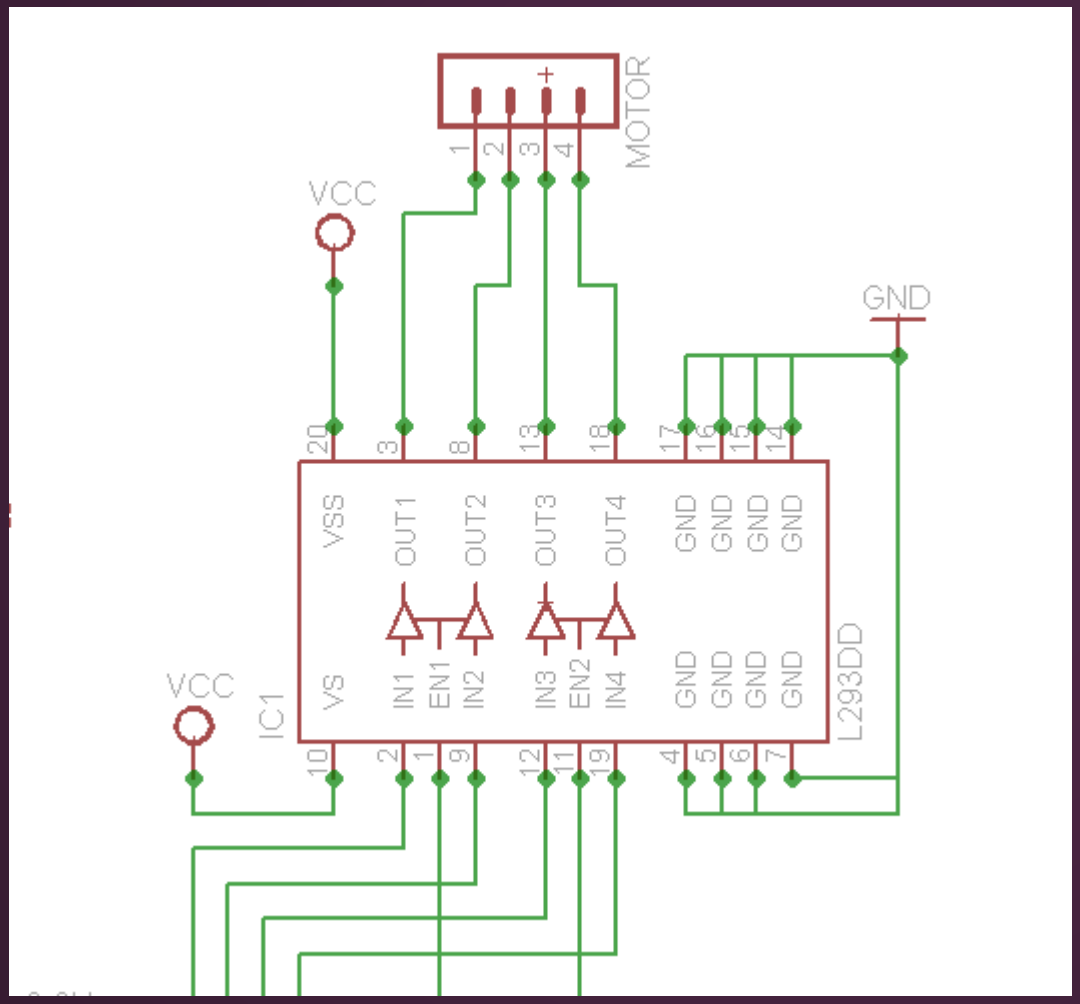

- L293DD: Dual H-Bridge motor driver
- Replaced motor driver with circuitry drawn
- PWM ports

Audio Amplifier

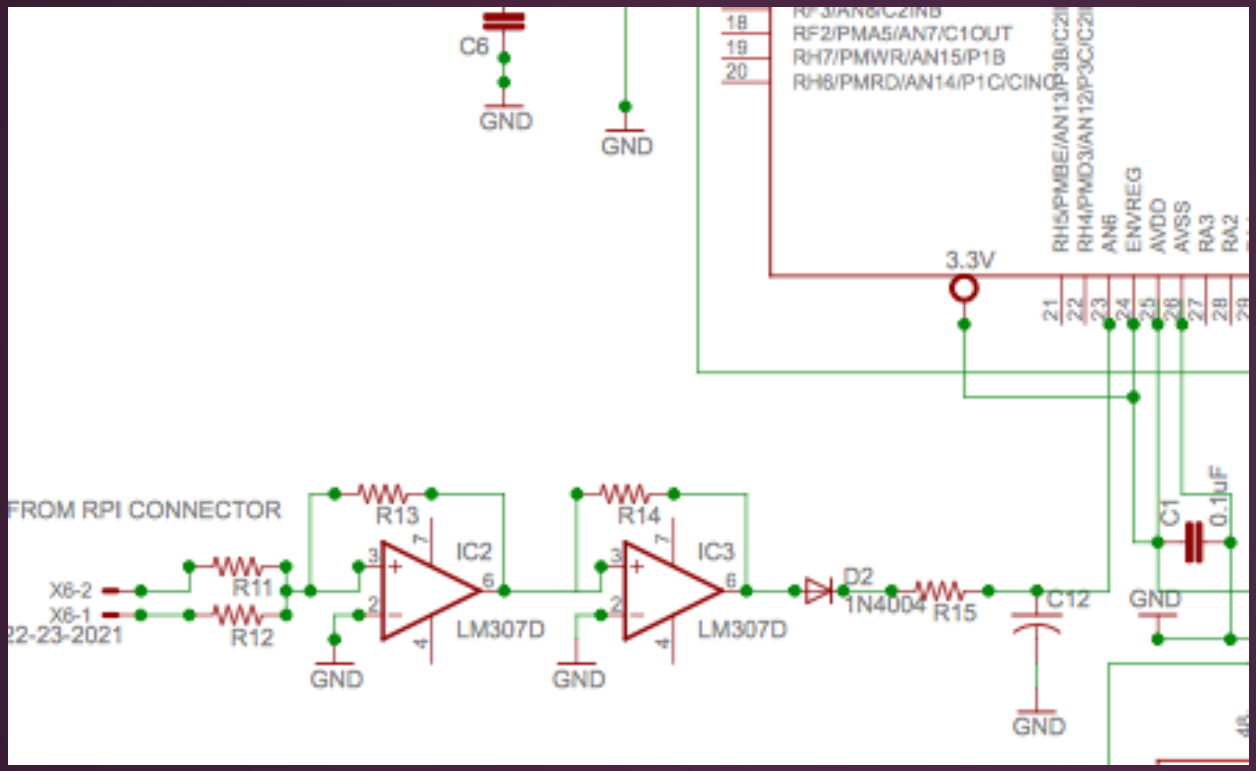

- Gain
- Envelope detector
- ATD pin

Connectors/Headers

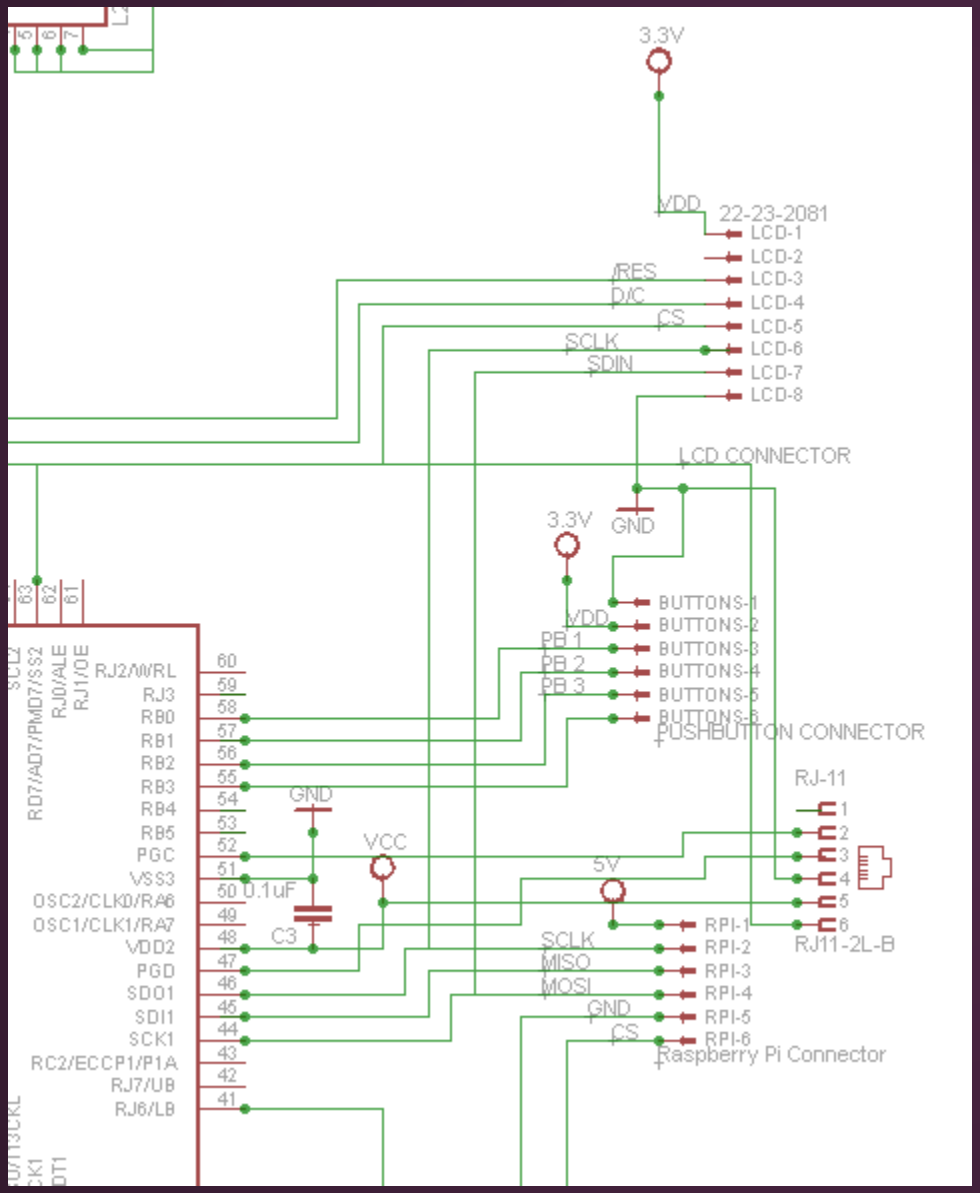

- Slave/Master SPI header
- LCD header
- Programming connector (RJ-11)
- Push buttons header
- Raspberry Pi header

LED Driver

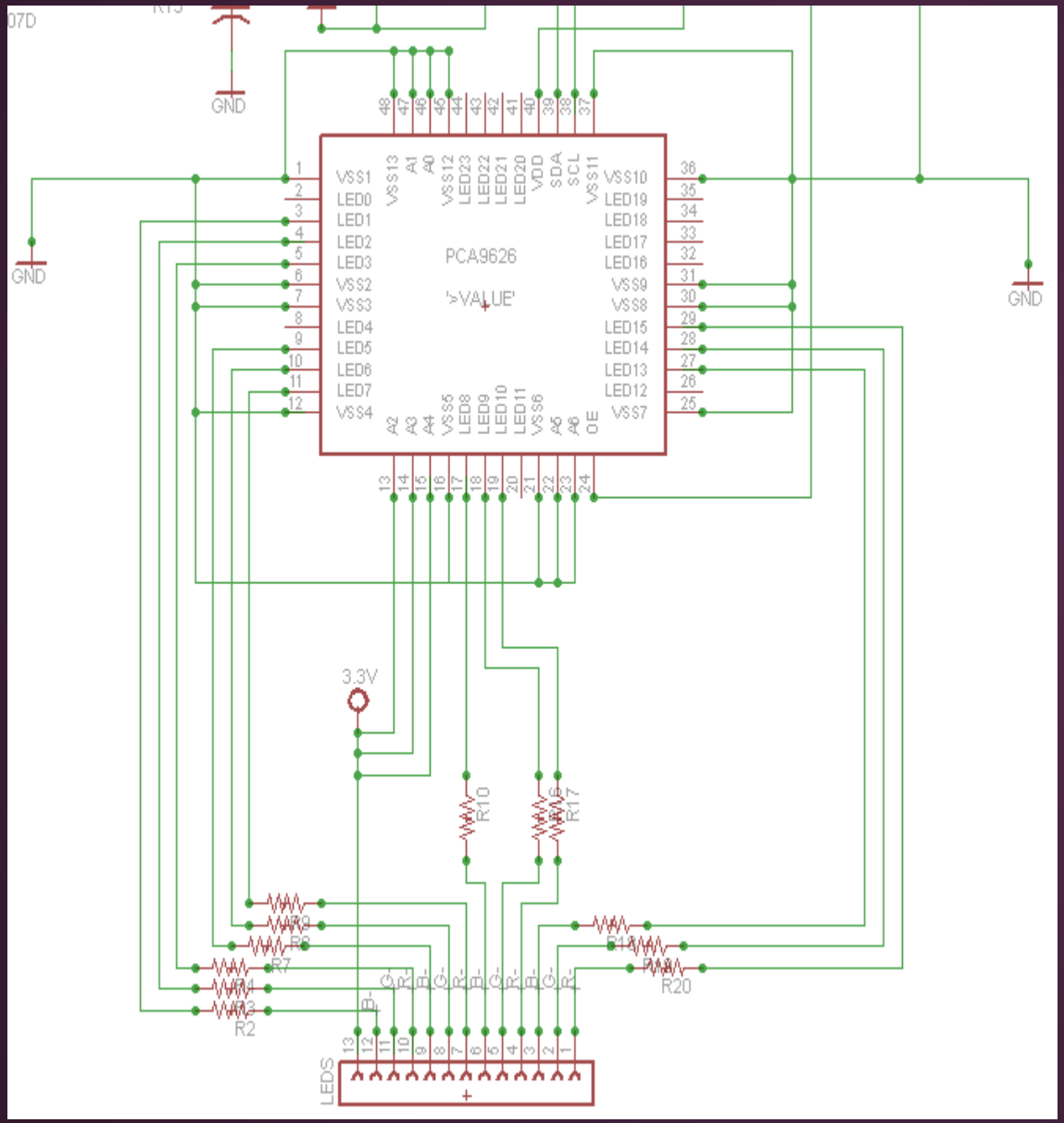

- I^2C
  - Pull up resistors
  - Address pins

LED output pins traced to header

PCB Layout - General

- **SparkFun DRC**
  - 10 mil trace minimum
  - 10 mil trace spacing
  - 24 mil polygon isolation
  - 23 mil drill diameter
- **Other Considerations**
  - No acute angles
  - Two Layer

PCB Layout

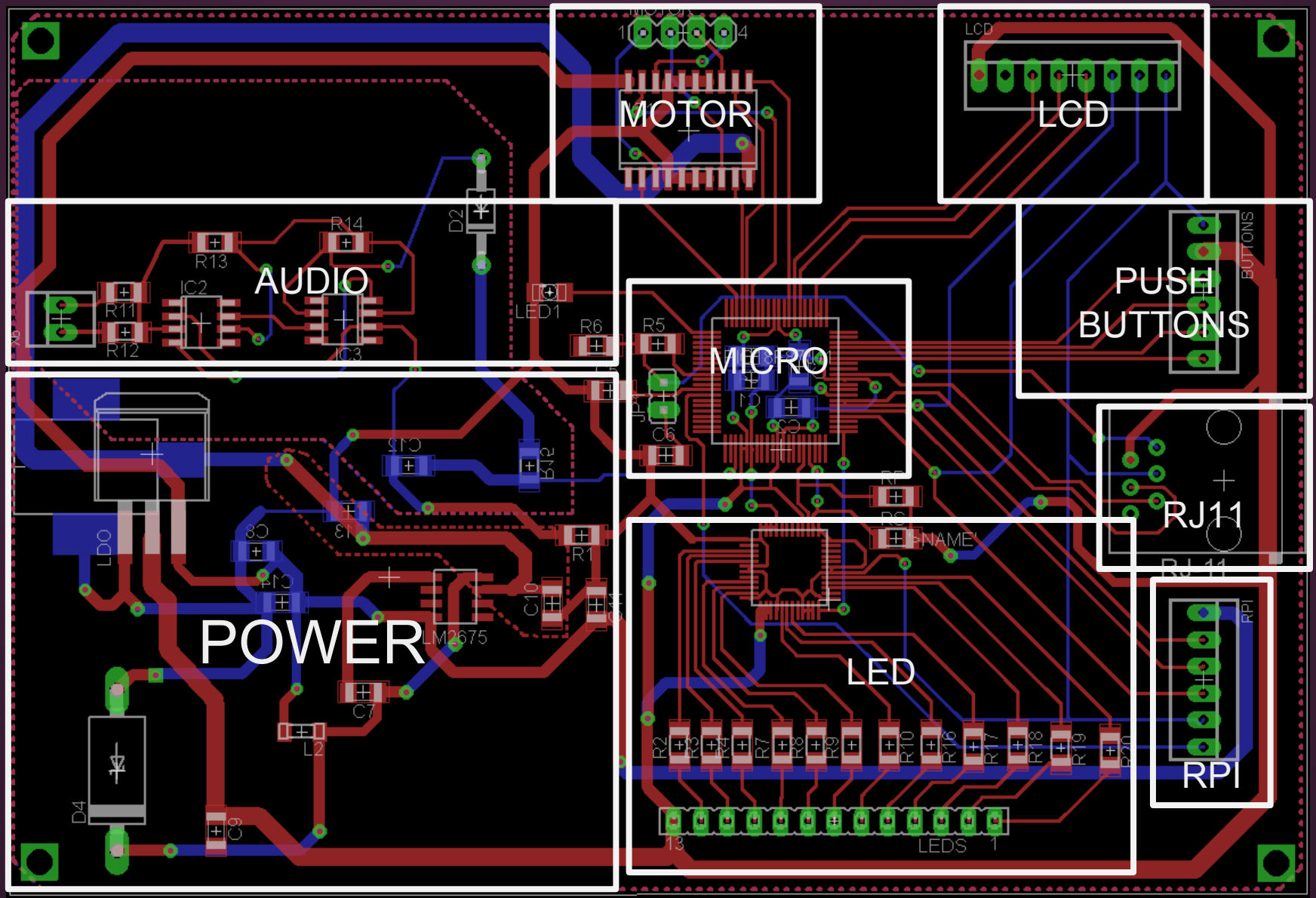

PCB Layout

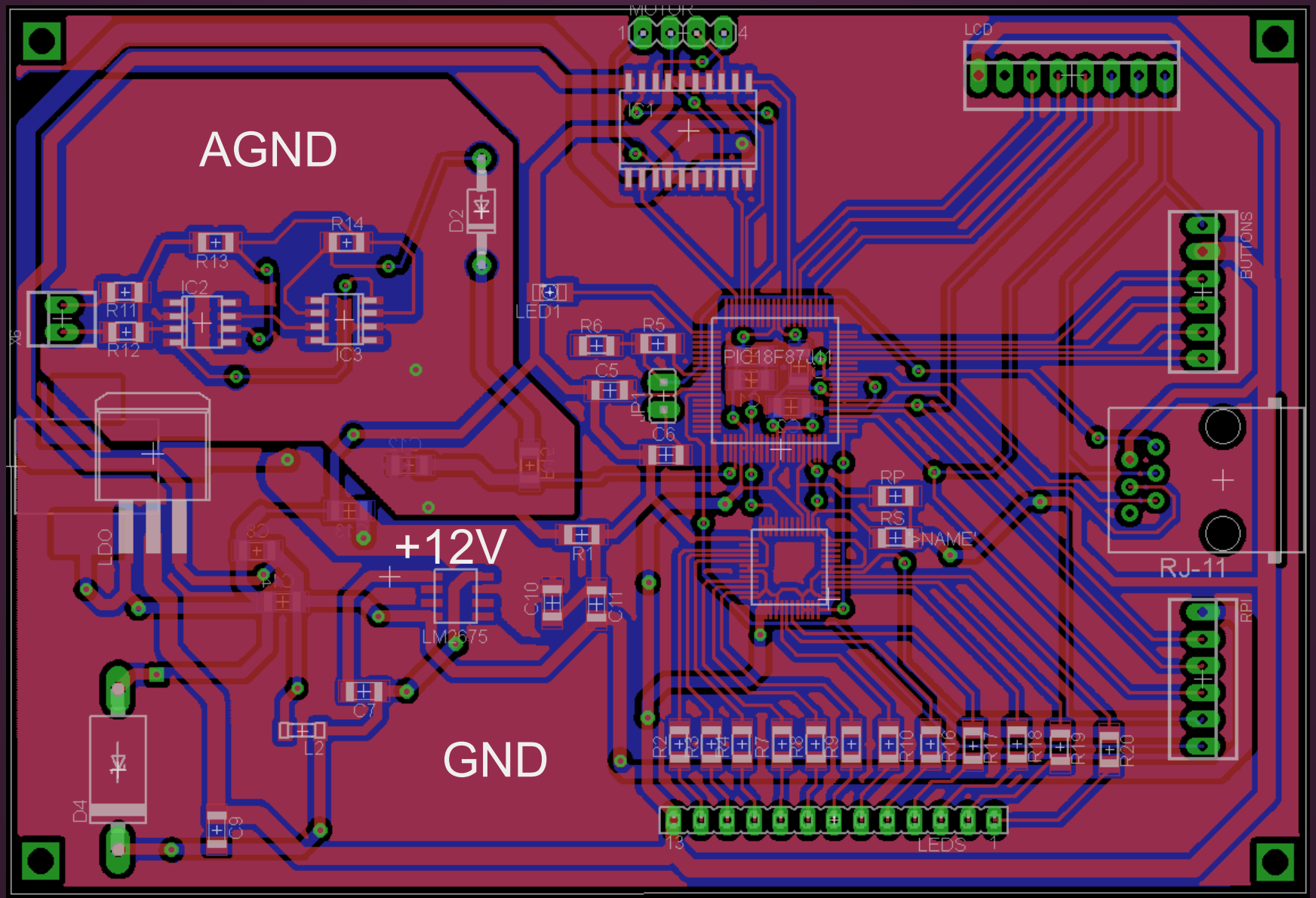

AGND
GND
+12V
MOTOR
LCD
BUTTONS
RJ-11
RPI
LEDS
LED1
PIC18F87J11
LM2675
LDO
R1
R5
R6
R11
R12
R13
R14
C5
C6
C7
C9
C10
C11
L2
D2
D4
RP
RS
>NAME

PCB Layout - Power

- **3.3V, 5V, 12V**
- **40-70 mil Power/GND traces**
- **Separate Digital and Analog GNDs**
- **Power components placed together**

Resistor acting as jumper

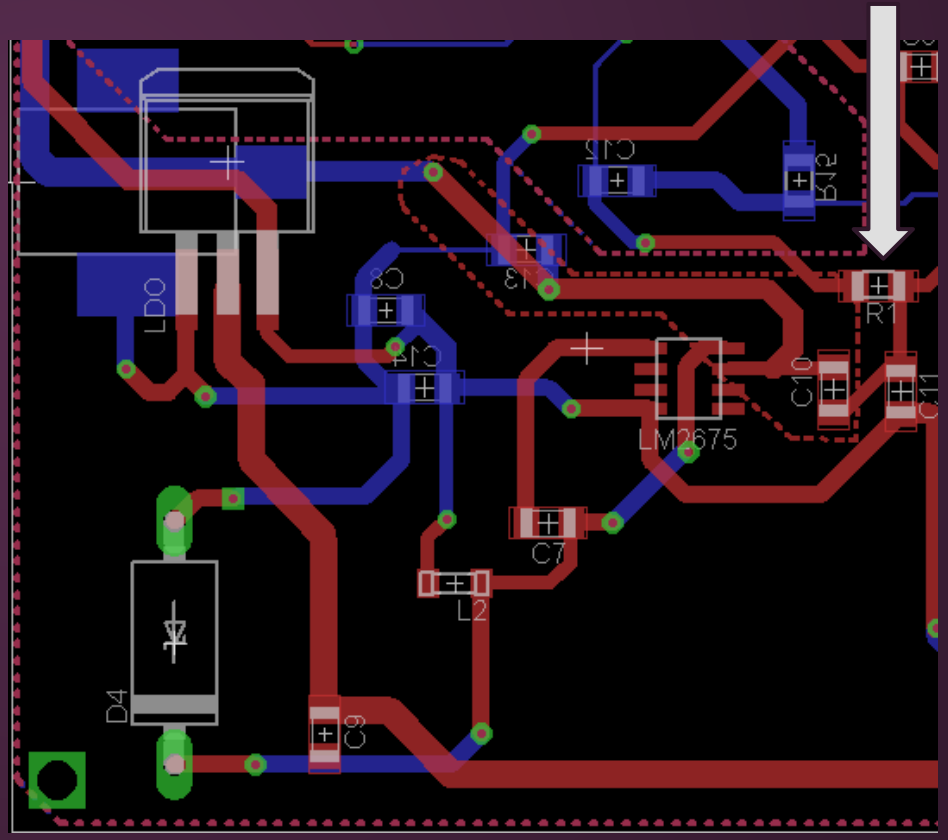

PCB Layout - Microcontroller

- **Decoupling capacitors directly under micro**
  - Within 250 mil as directed by Manufacturer
- **Programming connector for MCLR, DATA, CLK**

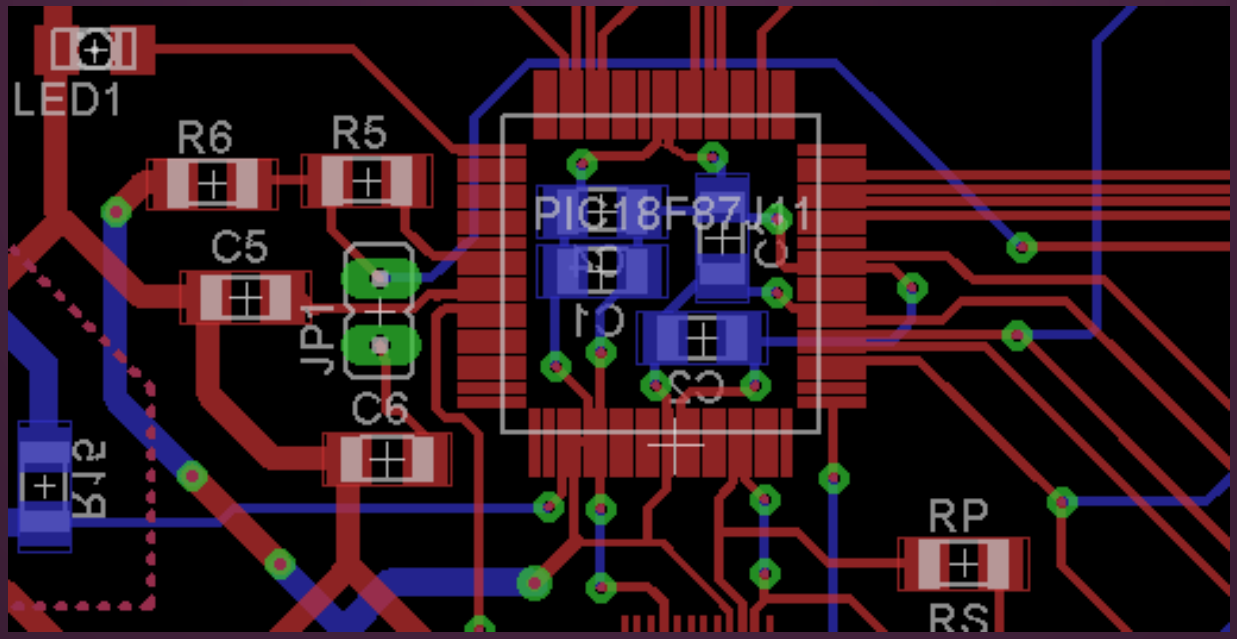

PCB Layout - External Drivers

- **LED Driver**
  - Pull Up Resistors for I2C DATA/CLK
  - Set Slave address - 0011100
- **Motor Driver**

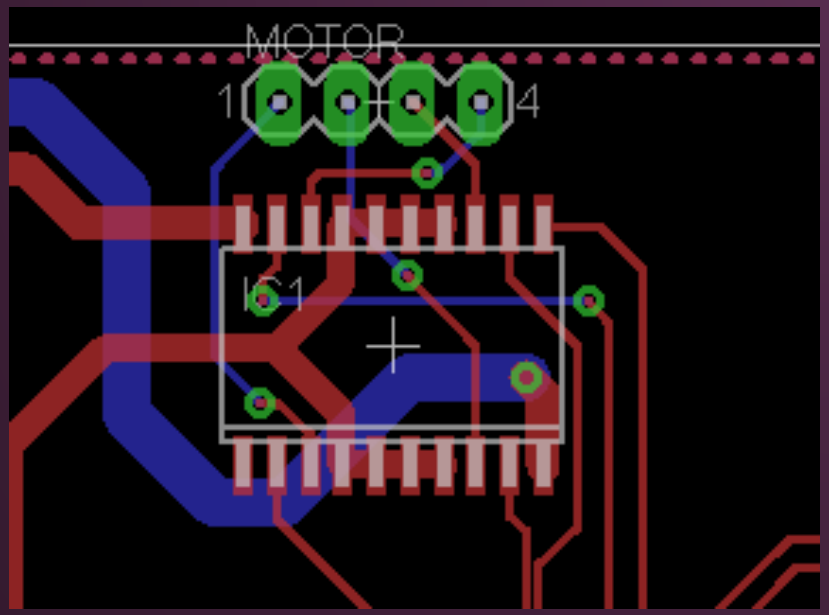

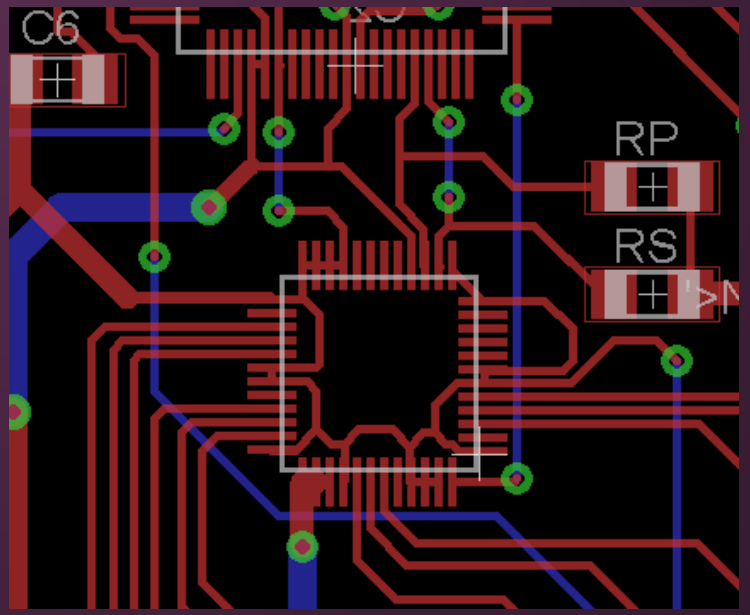

PCB Layout - External Headers

- **Raspberry Pi**
- **LCD**
- **Motor**
- **LED**
- **Push Buttons**

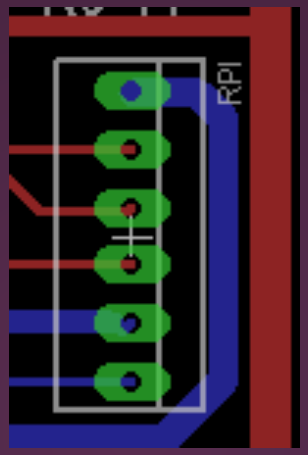

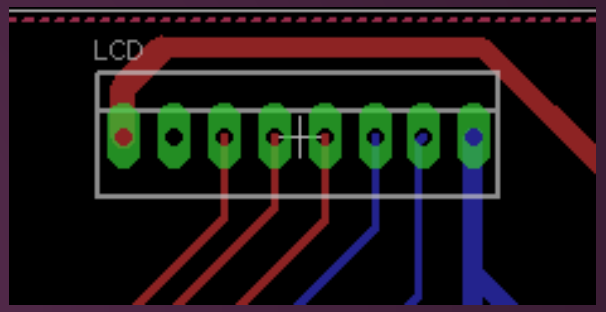

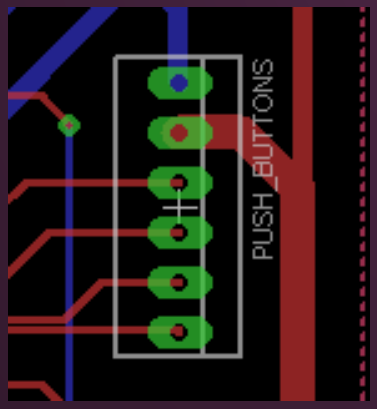

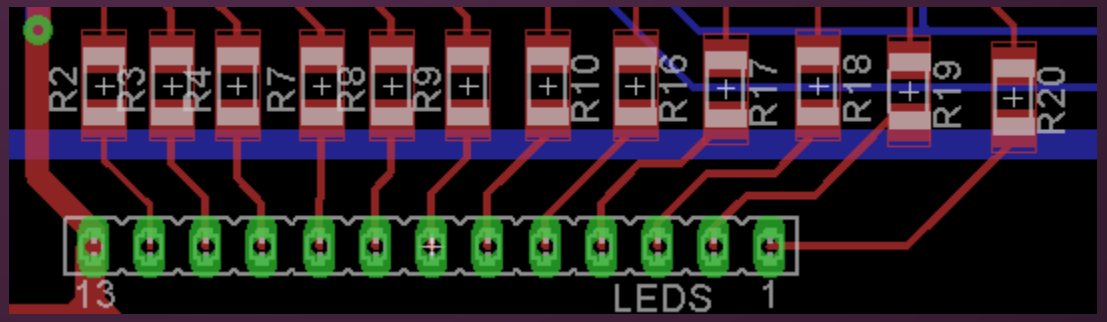

Software Design - Product

- **Raspberry Pi**
  - continuous operation, streaming, polling SPI for pending commands
- **Micro - Interrupt-driven**
  - Push button interrupts driving major functionality
  - ADC sampling driven by timer interrupts
  - Constant PWM operation for motor control - uses ADC value and timer for beat detection

Software Design - Webapp

- **Search functionality**
  - find and vote for song
- **Tally votes**
  - Enqueue most voted-for song
- **Respond to requests**
  - from Raspberry Pi for new song(s)
- **View upcoming songs**

Software Development Status

- SPI transmit from Raspberry Pi

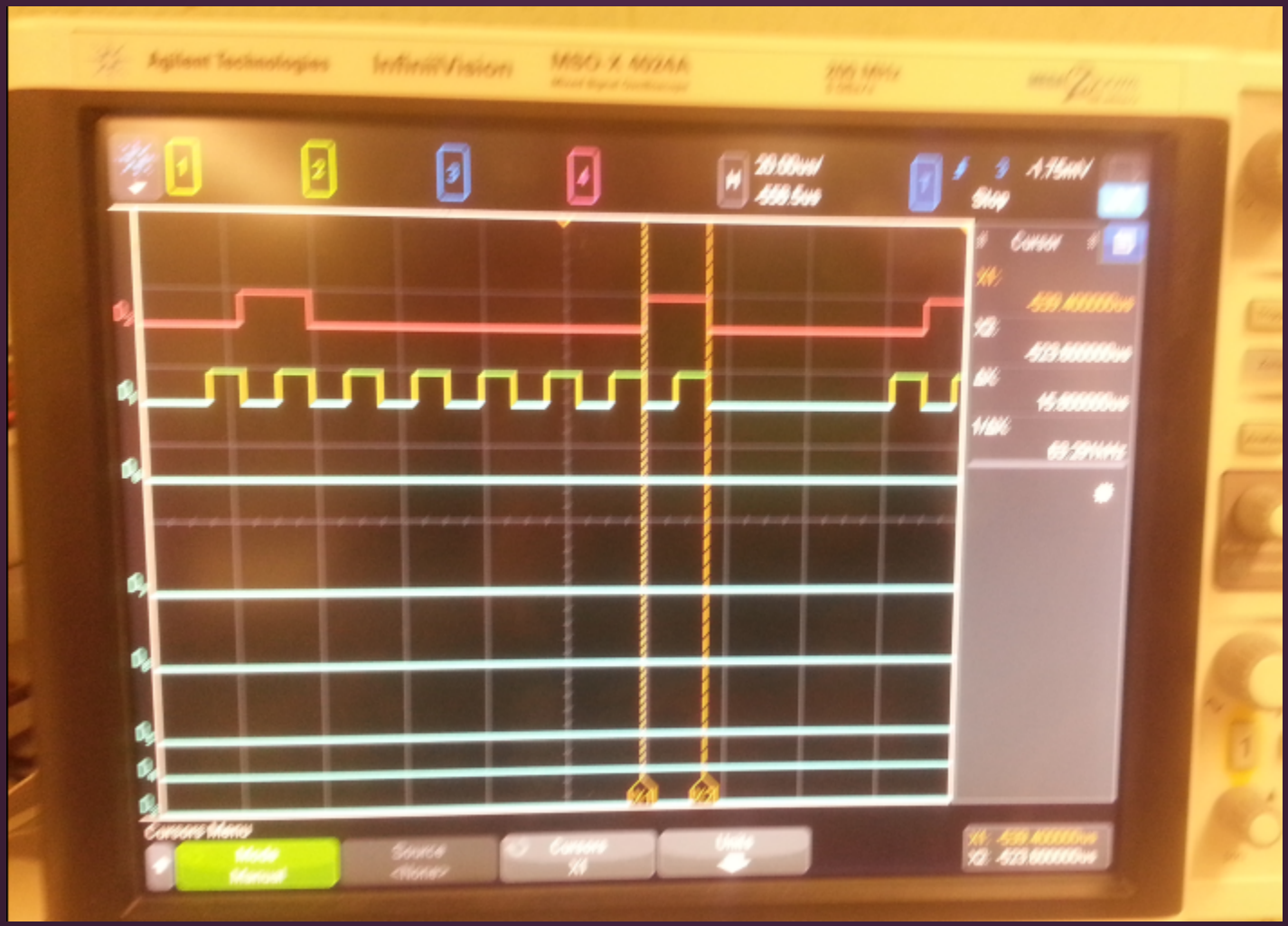

Software Development Status

- Webapp

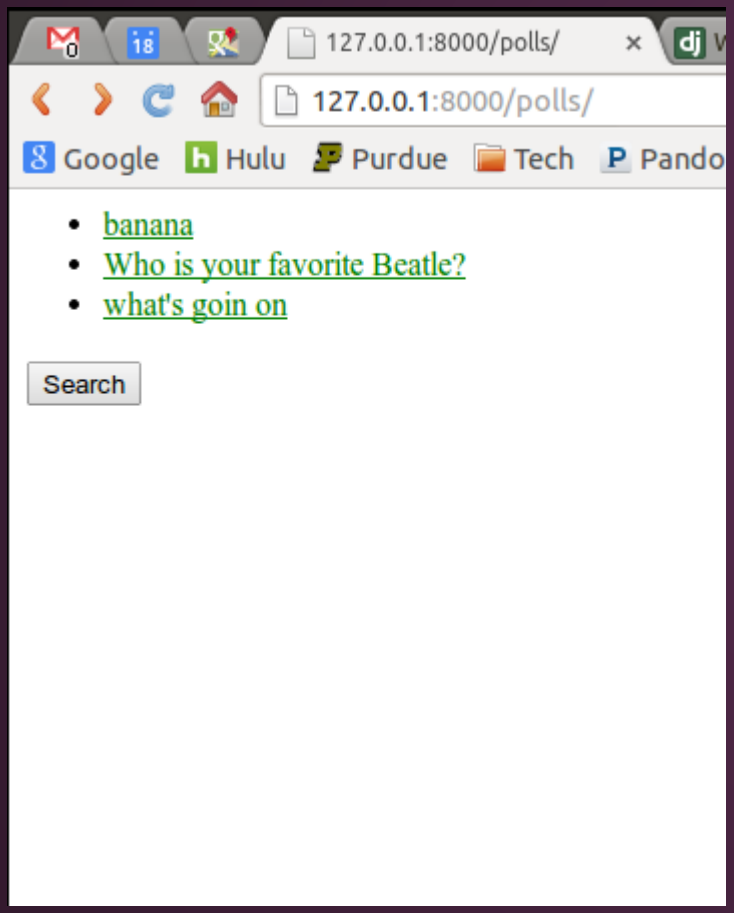

Week	Dates	Course Events	PCB	Micro / RPi	Webapp	Packaging
8	March 2- March 8	Midterm Design Reviews	Revise PCB	SPI comms		Order enclosure
9	March 9-March 15	Homework 7: Final PCB Submission	PCB Verification and Ordering	RPI audio streaming/ micro LCD	Display search results meaningfully	
10	March 16- March 22	Homework 8: Midterm Peer Evaluations	PCB fab and shipped			
11	March 23- March 29	Homework 9: Software Design Narrative	Parts/circuit testing	Audio Streaming/ LCD Audio Filtering	Develop response mechanism for Rpi requests	3D CAD drawing/ Print part
12	March 30- April 5	Homework 10: Patent Liability Analysis, Notebook Evaluation 2	Solder parts to board	LEDs/Push Buttons		Drill enclosure for LCD/motor
13	April 6th- April 12	Homework 11: Reliability and Safety Analysis	Finish Solder	LEDs/ Motor	Vote tallying mechanism	Mount LEDs and poles on enclosure
14	April 13th - April 19	Homework 12: Ethical and Environmental Impact Analysis		Testing	Top 5/Now playing feedback to user	Place parts including PCB board and rpi into enclosure
15	April 20 - April 26	Homework 13: User Manual	Final Testing	Final Testing	Final Testing	Final Testing
16	April 27 - May 3	Final Report, Senior Design Showcase, Peer Evaluation 2				
17	May 4 - May 9	Final Presentations				

Questions / Discussion