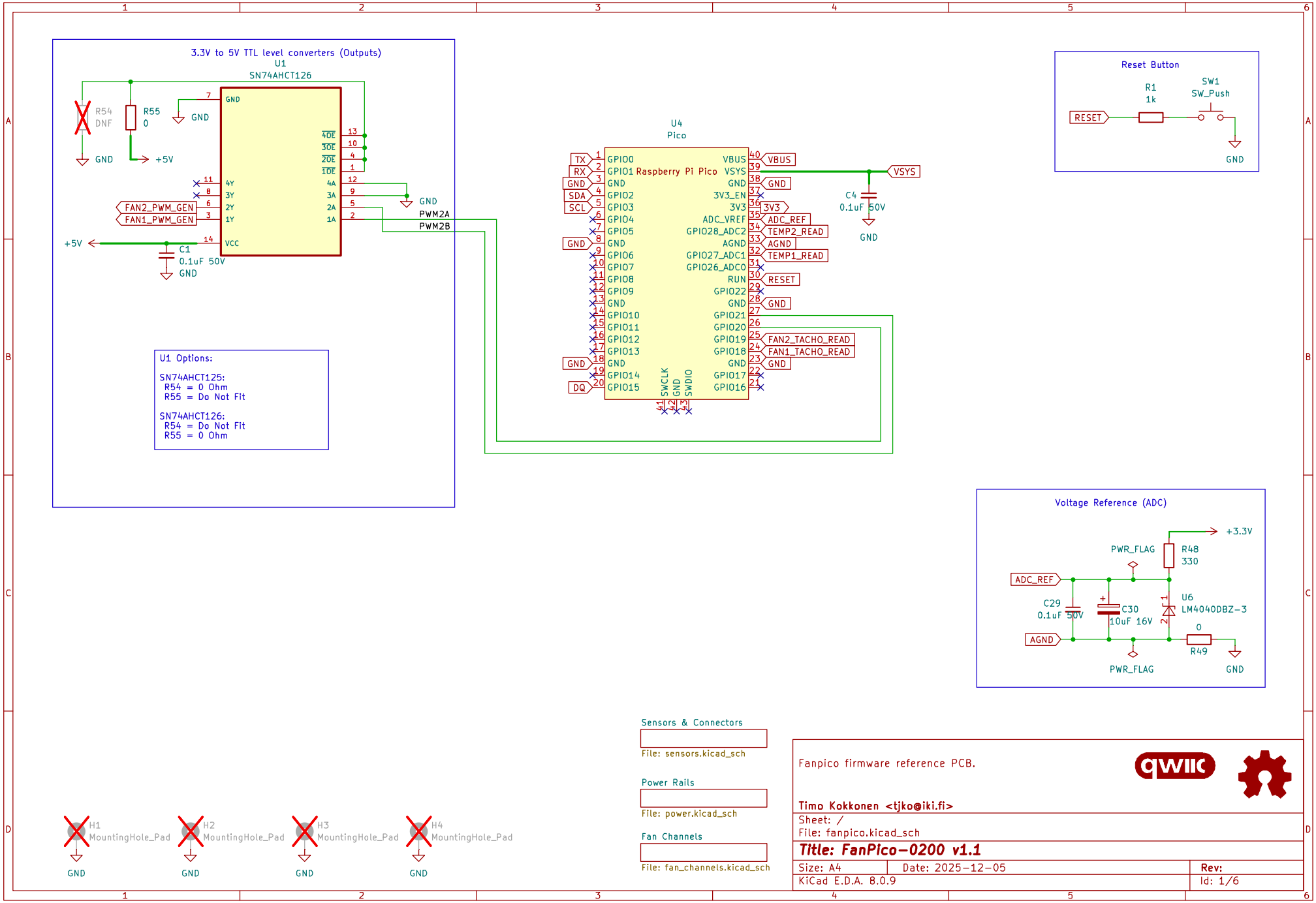
3.3V to 5V TTL level converters (Outputs)
U1
SN74AHCT126
R54
DNF
R55
0
GND
+5V
FAN2_PWM_GEN
FAN1_PWM_GEN
C1
0.1uF 50V
PWM2A
PWM2B
U1 Options:
SN74AHCT125:
R54 = 0 Ohm
R55 = Do Not Fit
SN74AHCT126:
R54 = Do Not Fit
R55 = 0 Ohm
U4
Pico
Raspberry Pi Pico
TX
RX
SDA
SCL
DQ
VBUS
VSYS
3V3
ADC_REF
TEMP2_READ
AGND
TEMP1_READ
RESET
FAN2_TACHO_READ
FAN1_TACHO_READ
C4
0.1uF 50V
Reset Button
R1
1k
SW1
SW_Push
Voltage Reference (ADC)
+3.3V
PWR_FLAG
R48
330
C29
0.1uF 50V
C30
10uF 16V
U6
LM4040DBZ-3
R49
0
Sensors & Connectors
File: sensors.kicad_sch
Power Rails
File: power.kicad_sch
Fan Channels
File: fan_channels.kicad_sch
H1
MountingHole_Pad
H2
MountingHole_Pad
H3
MountingHole_Pad
H4
MountingHole_Pad
Fanpico firmware reference PCB.
Timo Kokkonen <tjko@iki.fi>
Sheet: /
File: fanpico.kicad_sch
Title: FanPico-0200 v1.1
Size: A4
Date: 2025-12-05
Rev:
KiCad E.D.A. 8.0.9
Id: 1/6

Fan Channels

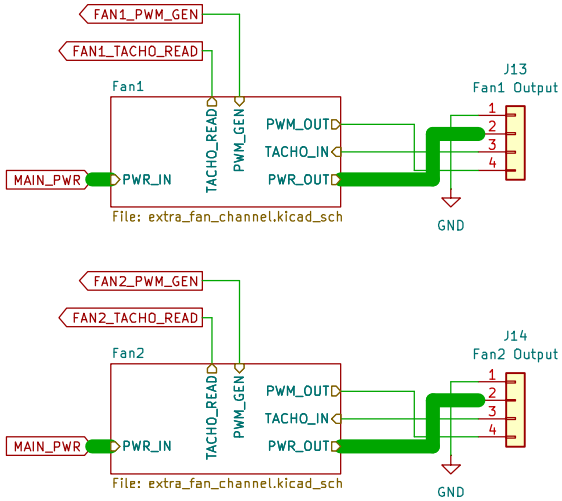

Fanpico firmware reference PCB.

Timo Kokkonen <tjko@iki.fi>

Sheet: /Fan Channels/
File: fan_channels.kicad_sch

Title: FanPico-0200 v1.1

Size: A4	Date: 2025-12-05	**Rev:**
KiCad E.D.A. 8.0.9		Id: 2/6

(Extra) Fan Channel: Fan1

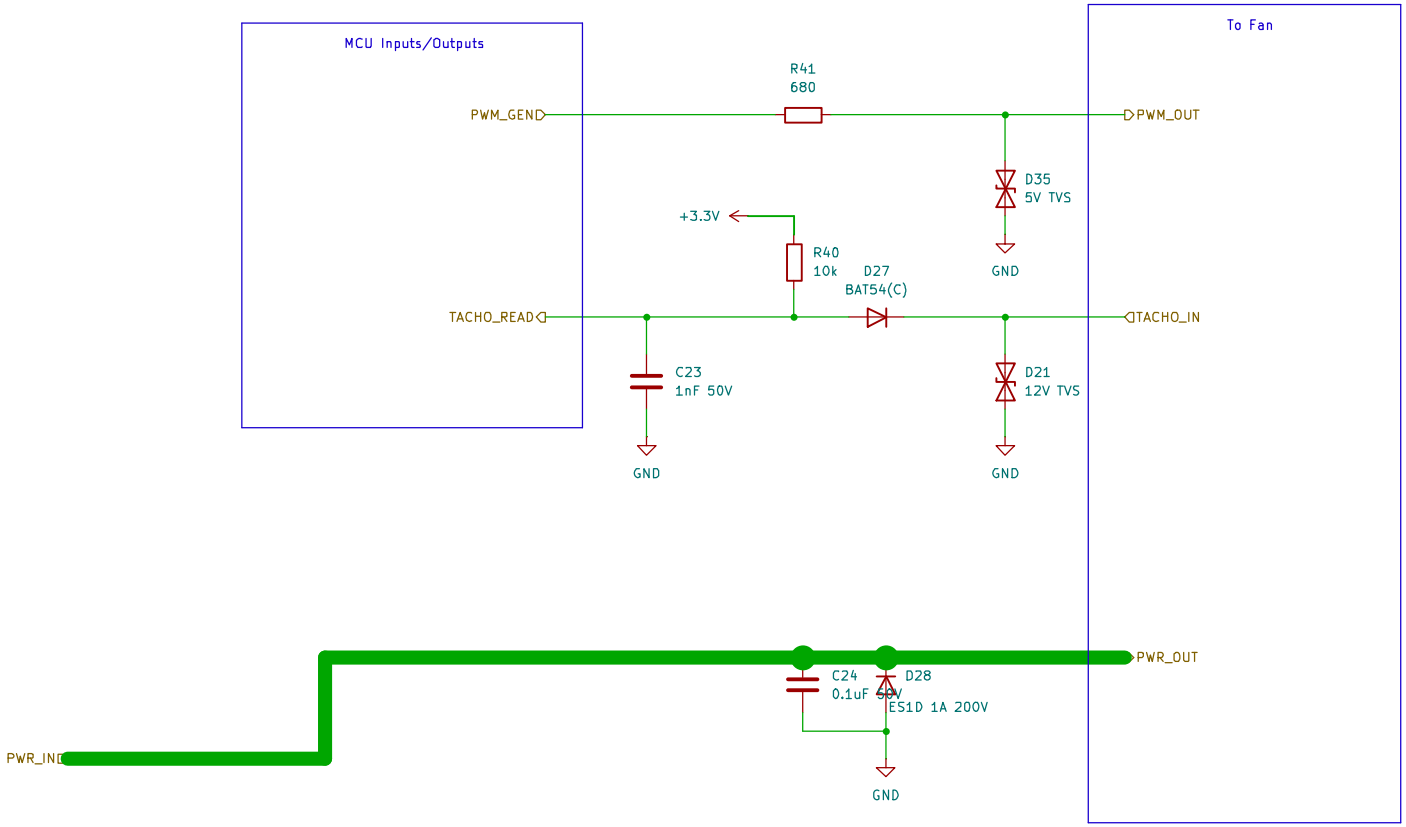

Fanpico firmware reference PCB.

Timo Kokkonen <tjko@iki.fi>

Sheet: /Fan Channels/Fan1/
File: extra_fan_channel.kicad_sch

Title: FanPico-0200 v1.1

Size: A4	Date: 2025-12-05	Rev:
KiCad E.D.A. 8.0.9		Id: 5/6

(Extra) Fan Channel: Fan2

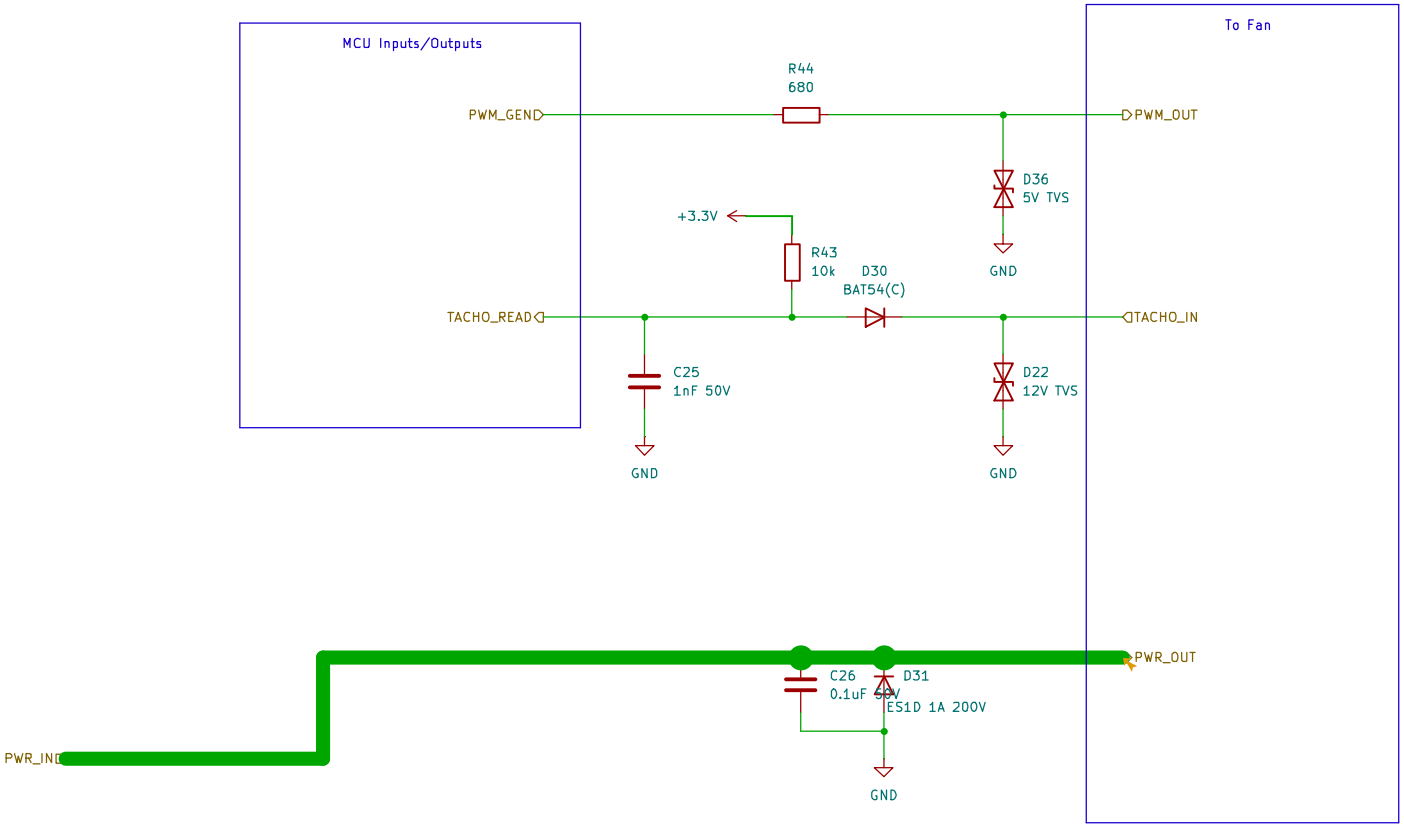

Fanpico firmware reference PCB.

Timo Kokkonen <tjko@iki.fi>

Sheet: /Fan Channels/Fan2/
File: extra_fan_channel.kicad_sch

Title: FanPico-0200 v1.1

Size: A4	Date: 2025-12-05	Rev:
KiCad E.D.A. 8.0.9		Id: 6/6

Power Rails

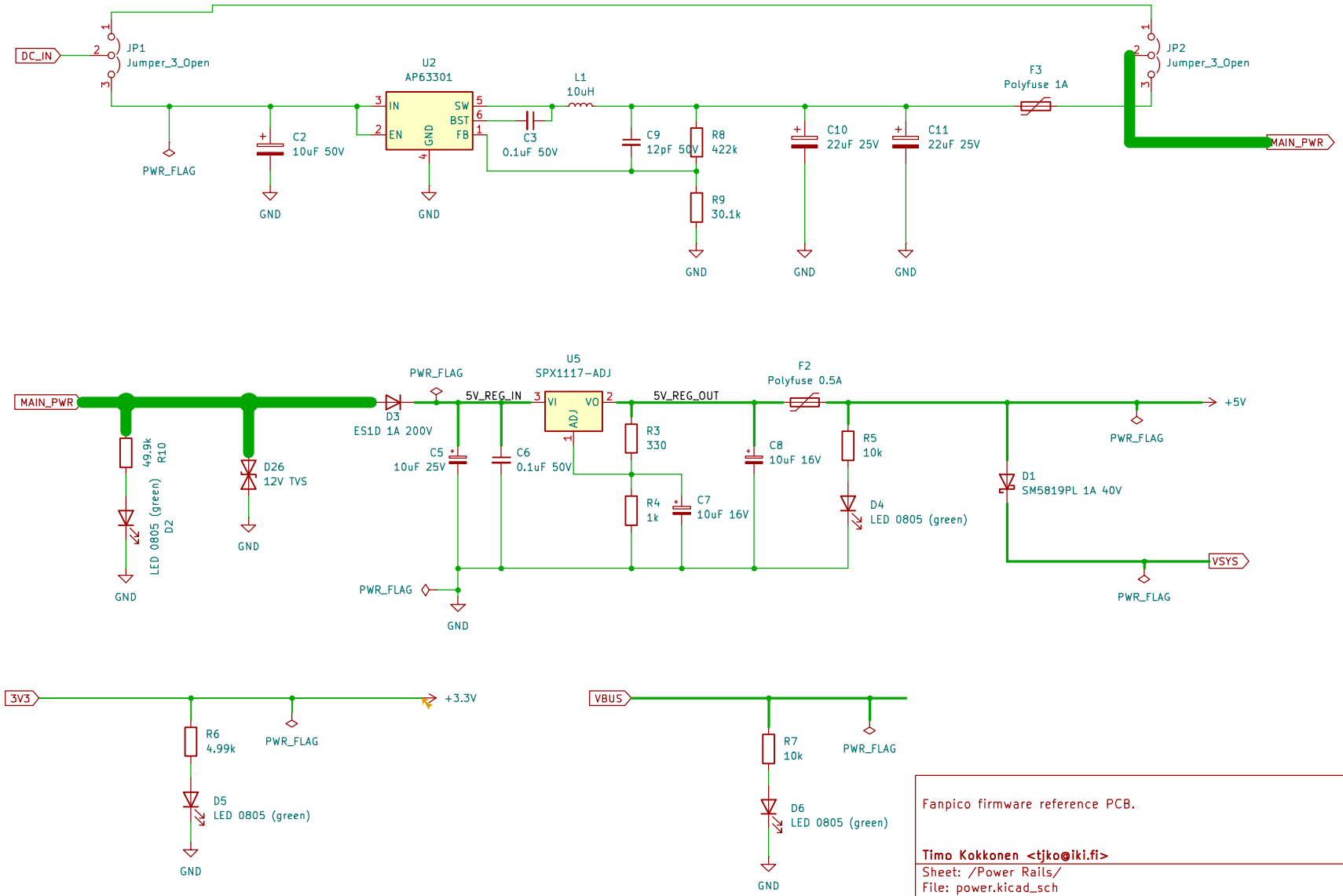

Fanpico firmware reference PCB.

Timo Kokkonen <tjko@iki.fi>

Sheet: /Power Rails/
File: power.kicad_sch

Title: FanPico-0200 v1.1

Size: A4	Date: 2025-12-05	Rev:
KiCad E.D.A. 8.0.9		Id: 7/6

Connectors / Sensors

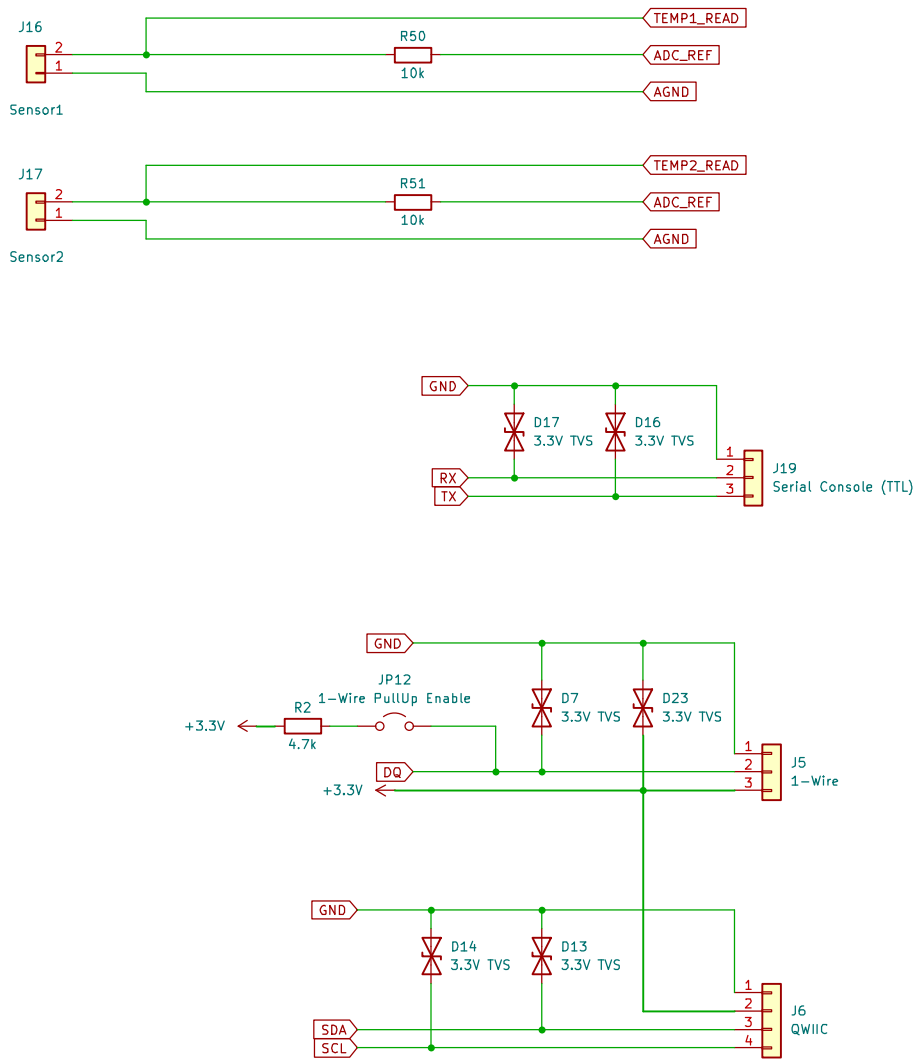

Display Connectors

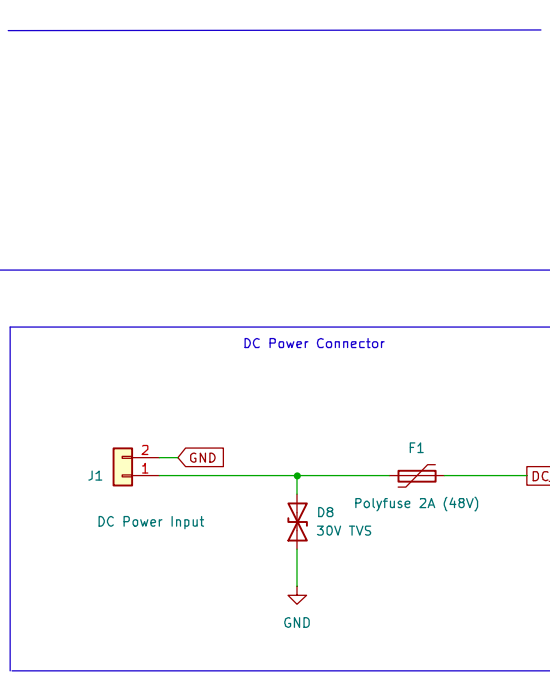

Fanpico firmware reference PCB.

Timo Kokkonen <tjko@iki.fi>

Sheet: /Sensors & Connectors/
File: sensors.kicad_sch

Title: FanPico-0200 v1.1

Size: A4	Date: 2025-12-05	Rev:
KiCad E.D.A. 8.0.9		Id: 8/6