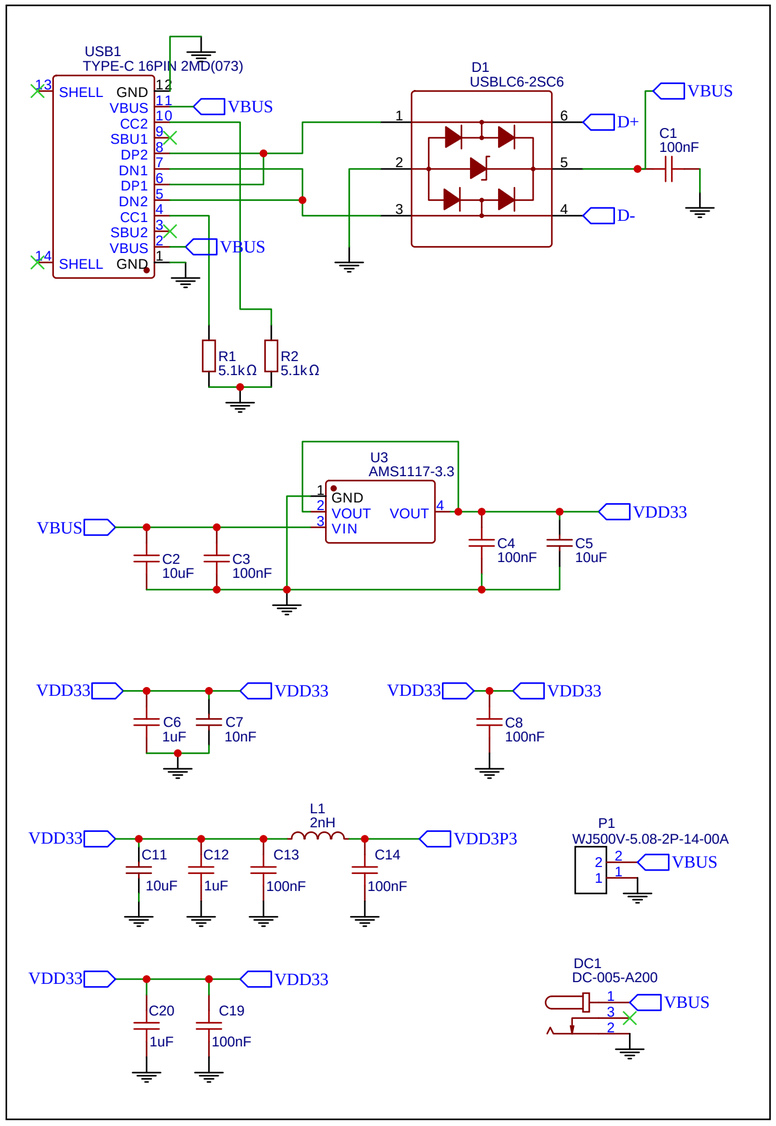

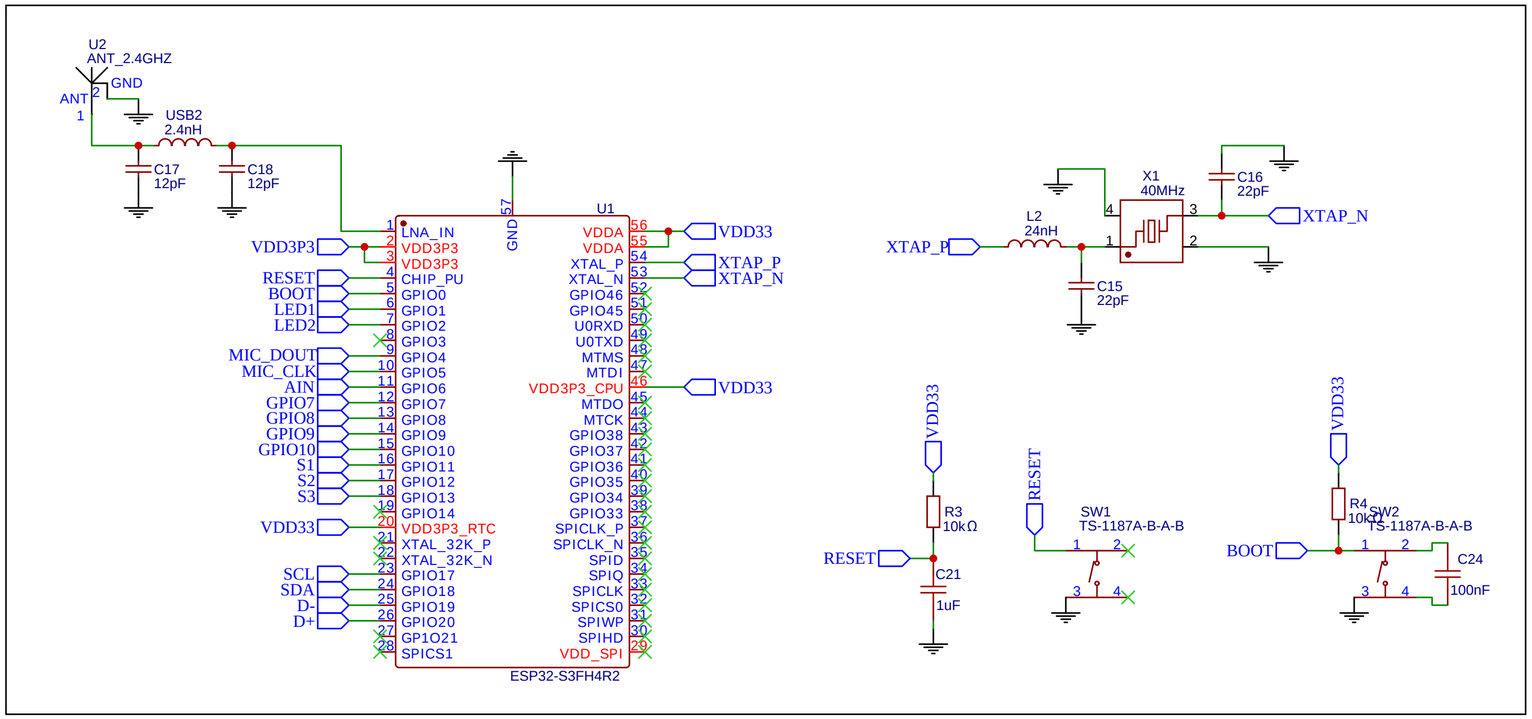

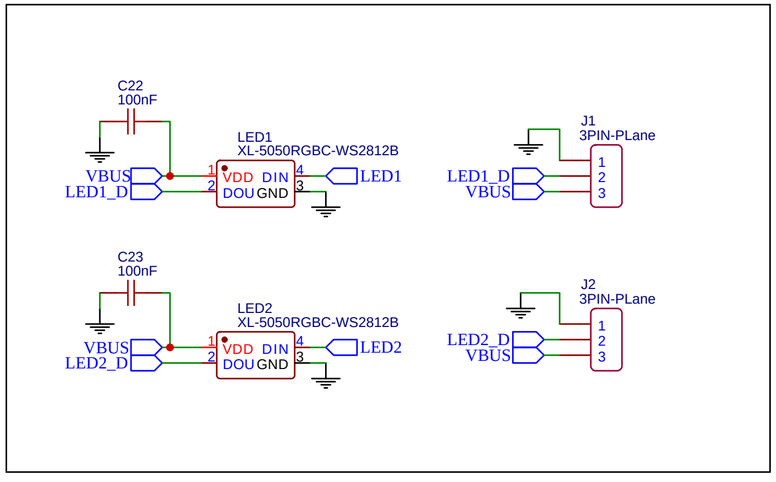

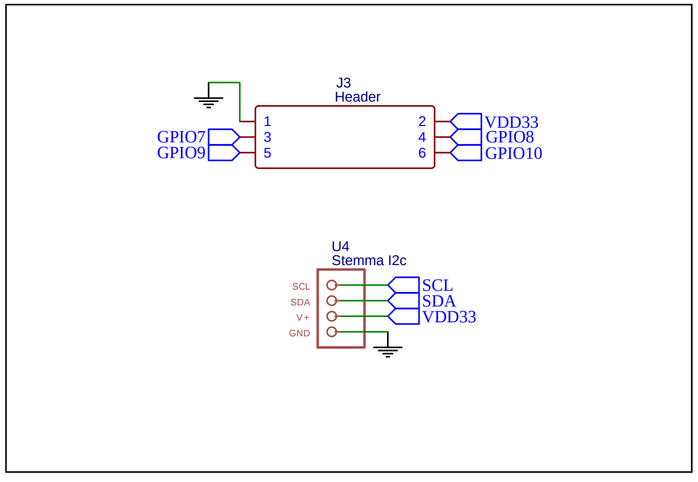

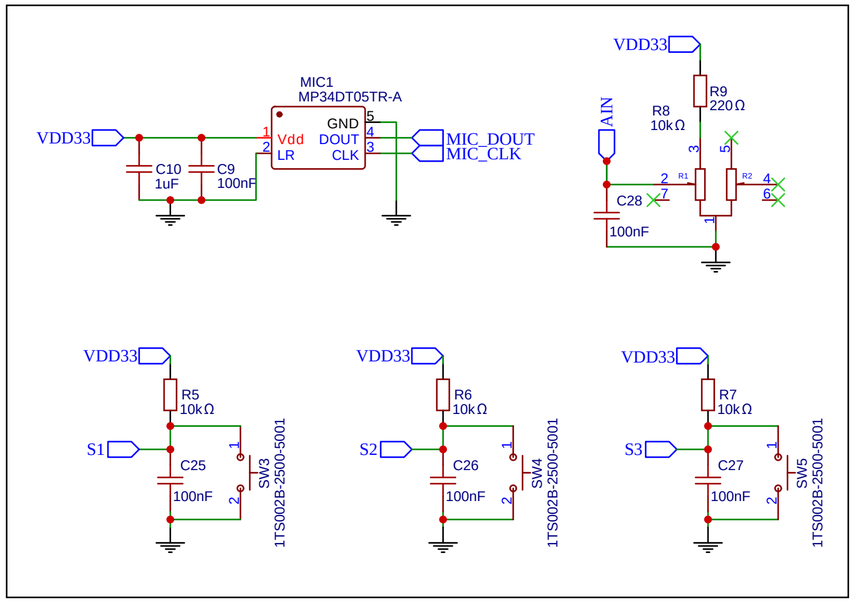

TITLE: ESP32S3_WLED_Audio_Portable	REV: 1.0
Company:	Sheet: 1/1
Date: 2024-01-30 Drawn By: tjohn327	