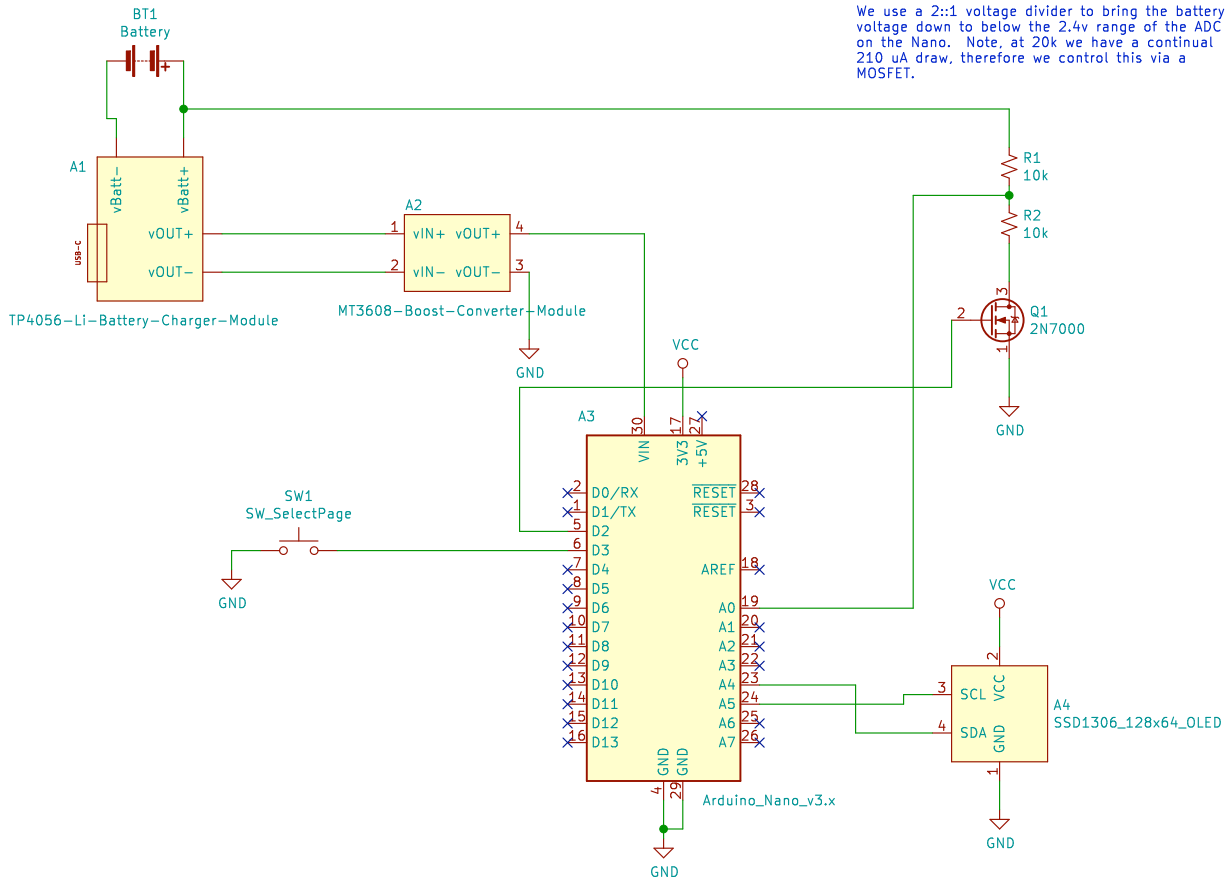

Author: Thomas J. Petz, Jr.
License CC BY 4.0
https://creativecommons.org/licenses/by/4.0/

www.tjpetz.com

Sheet: /
File: BLEPeripheral.sch

Title: BLEPeripheral

Size: A	Date: 2020−09−09	**Rev: 1.0**
KiCad E.D.A. eeschema (5.1.5−0−10_14)		Id: 1/1