REVISIONS				
ZONE	REV	DESCRIPTION	DATE	APPROVED
	A	ORIGINAL RELEASE	01-09-13	J.P.F
	B	CHANGES AS PER ECO42136	04-01-13	J.R

NOTES (UNLESS OTHERWISE SPECIFIED):

1. THIS DRAWING SPECIFIES THE REQUIREMENTS FOR A PRINTED WIRING BOARD IN ACCORDANCE WITH SPECIFICATION IPC-A-600 CLASS 2 (LATEST REVISION).
2. THE PWB MUST BE LEAD FREE ASSEMBLY PROCESS COMPATIBLE AND MUST BE ABLE TO HANDLE A MINIMUM OF 5 CYCLES AT 260 DEGREES CELSIUS FOR 10 SECONDS.
3. BASE MATERIAL - LAMINATE AND PREPREG SHALL MEET IPC-4101B-26, 83 or 98
   Tg - MUST BE GREATER THAN OR EQUAL TO 150 DEGREES CELSIUS.
   Td - MUST BE GREATER THAN OR EQUAL TO 330 DEGREES CELSIUS.
4. COPPER FOIL WEIGHT - SEE STACKUP DETAIL 'A'
5. CHARACTERISTIC IMPEDANCE - NONE
6. MINIMUM CONDUCTIVE WIDTH/SPACING TO BE .005"/.005"
7. PLATING FINISH - BOTH SIDES ENIG (ELECTROLESS NICKEL IMMERSION GOLD):
   .05080-.232 MICRON (2-8 MICROINCH) OF GOLD OVER
   2.540-6.350 MICRON (100-250 MICROINCH) OF NICKEL.
8. ALL THROUGH HOLE VIAS MAY BE PLATED SHUT.
9. SOLDERMASK - RED COLOR.BOTH SIDES.
   MODIFICATION OF SOLDERMASK IS NOT ALLOWED WITHOUT WRITTEN PERMISSION FROM FREESCALE.
10. SILKSCREEN - WHITE EPOXY INK, BOTH SIDES. NO SILK ON PADS.
11. ELECTRICAL TEST - 100% IPCD356.
12. PRINTED WIRING BOARD IS TO BE INDIVIDUALLY BAGGED.
13. DRC'S MUST BE RUN ON THE GERBER BEFORE BUILDING BOARDS, UNLESS PRIOR APPROVAL IS GIVEN IN WRITING BY FREESCALE.
14. TEARDROPS MAYBE ADDED AT THE FAB HOUSE TO ALL SIGNAL LAYERS.
15. 2 SOLDER SAMPLES TO BE PROVIDED.
16. BASIC GRID INCREMENT AT 1:1 IS .0001.
17. SUPPLIER MARKINGS - ON SOLDER SIDE ONLY, WHERE SHOWN.
    - MUST BE UL RECOGNIZED AND MUST HAVE AN ID THAT CONFORMS TO UL94V-0
18. THE PWB WILL BE MARKED AS LEAD FREE BY USE OF AN INK STAMP (P6)
19. THE PWB WILL BE MARKED AS LEAD FREE PROCESS COMPATIBLE BY USE OF AN INK STAMP (260°C)
20. ALL PLATED AND NON-PLATED THROUGH HOLES ARE TO BE DRILLED AT PRIMARY DRILL STEP. ALL HOLE LOCATION TOLERANCES ARE TO BE +/-.002 IN REFERENCE TO THE PRIMARY DATUM.
21. FINISHED PCB MUST BE PANELIZED FOR ASSEMBLY ACCORDING TO CONTRACT MANUFACTURERS REQUIREMENTS. THE ADDITION OF RAILS AND .125" NON-PLATED TOOLING HOLES ARE AT THE DISCRETION OF CONTRACT MANUFACTURER.PANELIZATION MUST BE APPROVED BY CONTRACT MANUFACTURER.
22. INTENTIONAL SHORT IN J6 BETWEEN NETS P3V3 AND P3V3_VREG
    INTENTIONAL SHORT IN J8 BETWEEN NETS LIGHT_SNS AND SNS_LIGHT_ADC
    INTENTIONAL SHORT IN J9 BETWEEN NETS P3V3 AND P3V3_SDA
    INTENTIONAL SHORT IN J17 BETWEEN NETS P3V3 AND P3V3_KL46Z
    INTENTIONAL SHORT IN J18 BETWEEN NETS SWD_CLK_TGTMCU AND KL25_SWD_CLK
23. COPPER PADS FOR J13 AND J10 CAN BE SHAVED TO ALLOW ..010" CLEARANCE FROM BOARD EDGE.

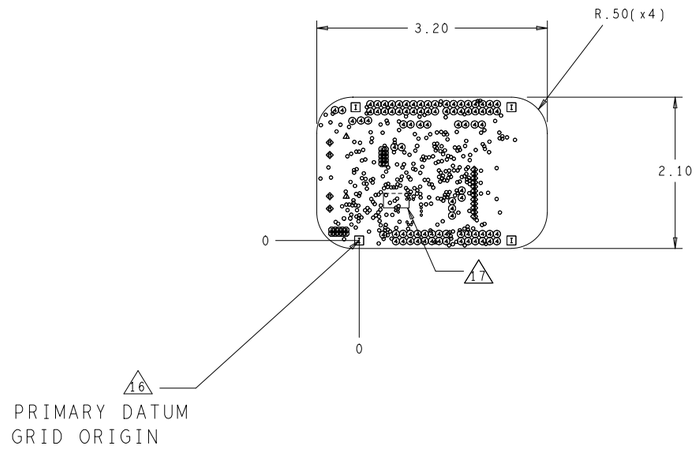

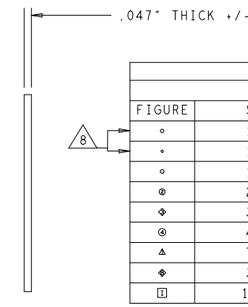

8

DRILL CHART: TOP to BOTTOM				
ALL UNITS ARE IN MILS				
FIGURE	SIZE	TOLERANCE	PLATED	QTY
◦	10.0	+0.0/-10.0	PLATED	302
•	12.0	+0.0/-12.0	PLATED	15
◦	18.0	+2.0/-2.0	PLATED	4
⊕	28.0	+2.0/-2.0	PLATED	20
⊕	35.0	+3.0/-3.0	PLATED	12
⊗	40.0	+3.0/-3.0	PLATED	85
△	73.0	+3.0/-3.0	PLATED	2
◈	35.0	+2.0/-2.0	NON-PLATED	4
⊡	125.0	+3.0/-3.0	NON-PLATED	4

FINISHED Cu WEIGHT

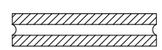

LAYER 1 L1_PS 1 oz.
LAYER 2 L2_SS 1 oz.

DETAIL A
LAYER STACKUP
SCALE: NONE

___ PUBI (PUBLIC INFORMATION)
_X_ FIUO (FREESCALE INTERNAL USE ONLY)
___ FCP (FREESCALE CONFIDENTIAL PROPRIETARY)

THIS DOCUMENT CONTAINS INFORMATION PROPRIETARY TO FREESCALE AND SHALL NOT BE USED FOR ENGINEERING DESIGN PROCUREMENT OR MANUFACTURE IN WHOLE OR IN PART WITHOUT THE CONSENT OF FREESCALE.

UNLESS OTHERWISE SPECIFIED
DIMENSIONS ARE IN INCHES
TOLERANCES ARE:
DECIMALS ANGLES
.XX ±.01 ±0-30'
.XXX ±.005
√ RMS ALL MACHINED SURFACES
BREAK ALL SHARP EDGES AND CORNERS.
REMOVE BURRS.
UNDERLINED DIM. NOT TO SCALE.
THIRD ANGLE ORTHOGRAPHIC PROJECTION IS USED.

PART NO. 170-27822

APPROVALS	DATE
DRAWN JAYASANKARAN[LnT]	04-01-13
CHECKED JOSE RAMON	04-01-13
DESIGN ENGINEER JOHN PAUL F.	04-01-13

FREESCALE
6501 WILLIAM CANNON DRIVE WEST AUSTIN, TEXAS 78735 USA

TITLE: PRINTED WIRING BOARD FRDM-KL46Z

SIZE	CAD FILE NAME	DWG. NO.	REV
D	LAY-27822	FAB-27822	B

SCALE 1/1 DO NOT SCALE DRAWING SHEET 1 OF 1