- **8-Bit Serial-In, Parallel-Out Shift**
- **Wide Operating Voltage Range of 2 V to 6 V**
- **High-Current 3-State Outputs Can Drive Up To 15 LSTTL Loads**
- **Low Power Consumption, 80-μA Max I_{CC}**
- **Typical t_{pd} = 14 ns**
- **±6-mA Output Drive at 5 V**
- **Low Input Current of 1 μA Max**
- **Shift Register Has Direct Clear**

DW, E, M, NS, OR SM PACKAGE
(TOP VIEW)

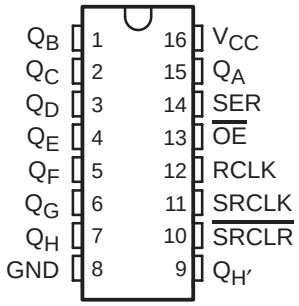

description/ordering information

The CD74HC595 device contains an 8-bit serial-in, parallel-out shift register that feeds an 8-bit D-type storage register. The storage register has parallel 3-state outputs. Separate clocks are provided for both the shift and storage registers. The shift register has a direct overriding clear ($\overline{SRCLR}$) input, serial (SER) input, and serial output for cascading. When the output-enable ($\overline{OE}$) input is high, the outputs are in the high-impedance state.

Both the shift register clock (SRCLK) and storage register clock (RCLK) are positive-edge triggered. If both clocks are connected together, the shift register always is one clock pulse ahead of the storage register.

ORDERING INFORMATION

T_A	PACKAGE†		ORDERABLE PART NUMBER	TOP-SIDE MARKING
−55°C to 125°C	PDIP − E	Tube of 25	CD74HC595E	CD74HC595E
	SOIC − DW	Tube of 40	CD74HC595DW	HC595M
		Reel of 2000	CD74HC595DWR	
	SOIC − M	Tube of 40	CD74HC595M	HC595M
		Reel of 2500	CD74HC595M96	
		Reel of 250	CD74HC595MT	
	SOP − NS	Reel of 2000	CD74HC595NSR	HC595M
	SSOP − SM	Tube of 80	CD74HC595SM	HJ595
		Reel of 2000	CD74HC595SM96	

† Package drawings, standard packing quantities, thermal data, symbolization, and PCB design guidelines are available at www.ti.com/sc/package.

Please be aware that an important notice concerning availability, standard warranty, and use in critical applications of Texas Instruments semiconductor products and disclaimers thereto appears at the end of this data sheet.

PRODUCTION DATA information is current as of publication date. Products conform to specifications per the terms of Texas Instruments standard warranty. Production processing does not necessarily include testing of all parameters.

Copyright © 2004, Texas Instruments Incorporated

FUNCTION TABLE

INPUTS					FUNCTION
SER	SRCLK	$\overline{SRCLR}$	RCLK	$\overline{OE}$	
X	X	X	X	H	Outputs Q_A−Q_H are disabled.
X	X	X	X	L	Outputs Q_A−Q_H are enabled.
X	X	L	X	X	Shift register is cleared.
L	↑	H	X	X	First stage of the shift register goes low. Other stages store the data of previous stage, respectively.
H	↑	H	X	X	First stage of the shift register goes high. Other stages store the data of previous stage, respectively.
X	X	X	↑	X	Shift-register data is stored in the storage register.

logic diagram (positive logic)

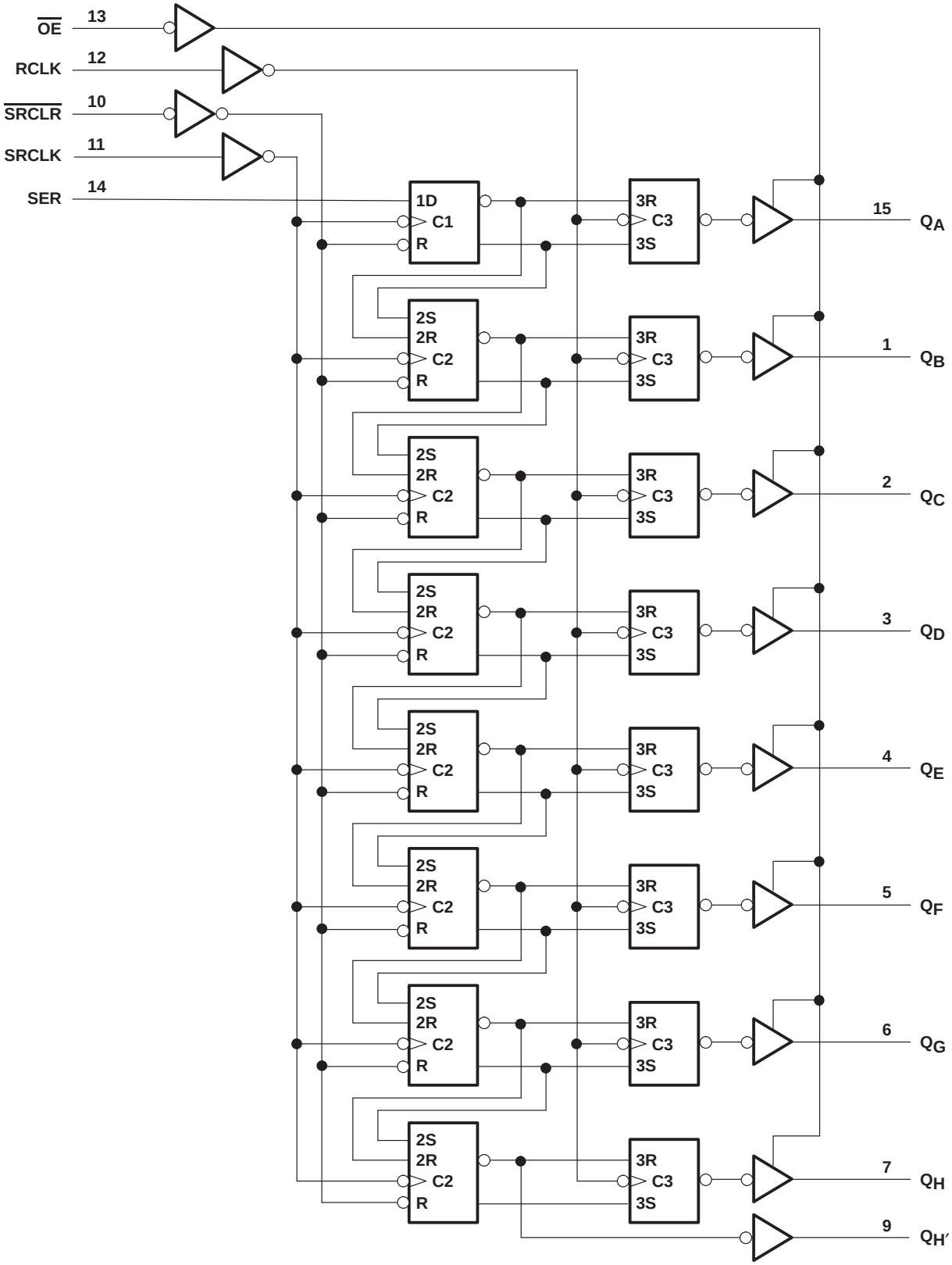

timing diagram

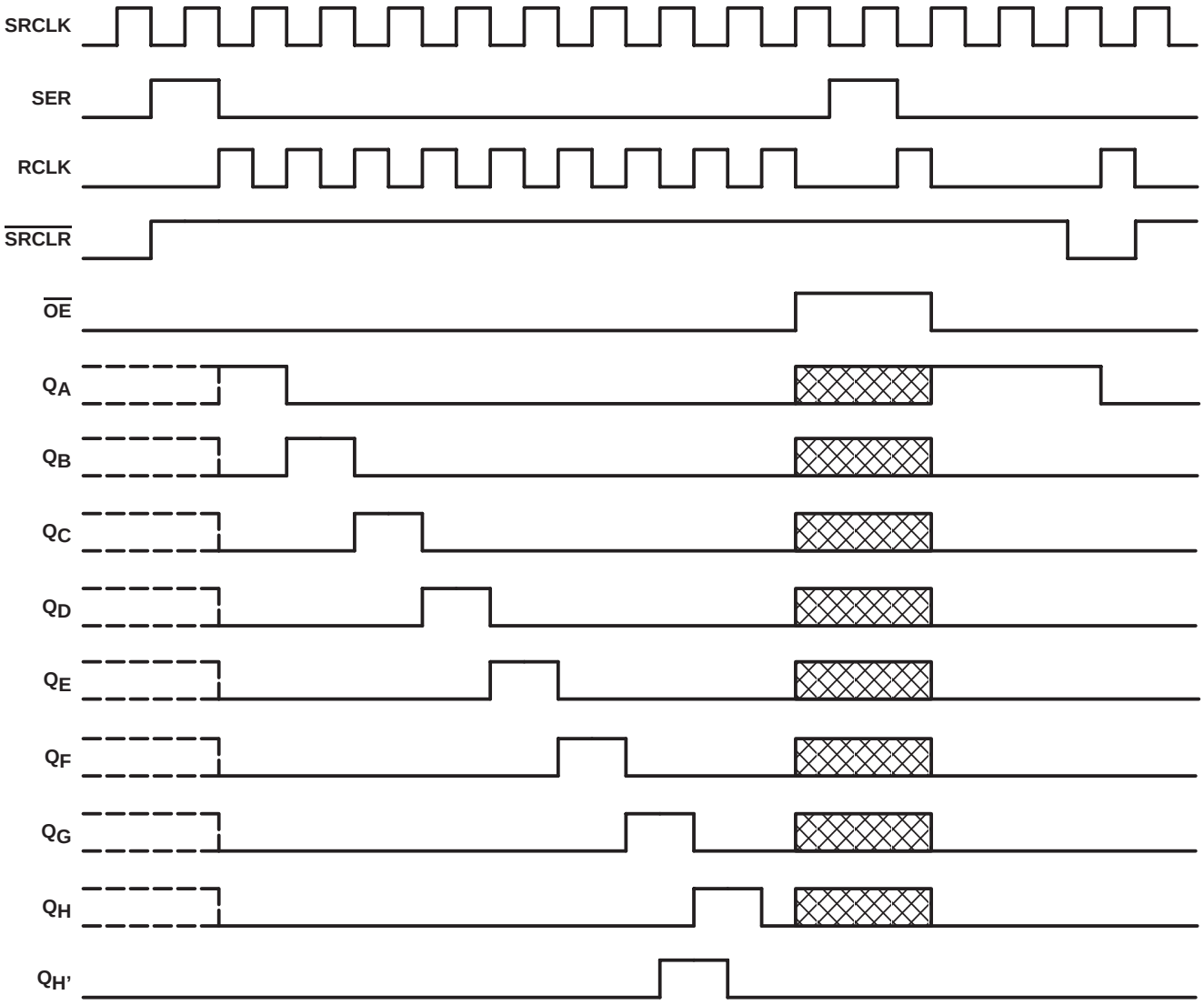

NOTE: implies that the output is in 3-State mode.

absolute maximum ratings over operating free-air temperature range (unless otherwise noted)†

Supply voltage range, V_{CC}	−0.5 V to 7 V
Input clamp current, I_{IK} ($V_I < 0$ or $V_I > V_{CC}$) (see Note 1)	±20 mA
Output clamp current, I_{OK} ($V_O < 0$ or $V_O > V_{CC}$) (see Note 1)	±20 mA
Continuous output current, I_O ($V_O = 0$ to V_{CC})	±35 mA
Continuous current through V_{CC} or GND	±70 mA
Package thermal impedance, θ_{JA} (see Note 2): E package	67°C/W
DW package	57°C/W
M package	73°C/W
NS package	64°C/W
SM package	82°C/W
Storage temperature range, T_{stg}	−65°C to 150°C

† Stresses beyond those listed under “absolute maximum ratings” may cause permanent damage to the device. These are stress ratings only, and functional operation of the device at these or any other conditions beyond those indicated under “recommended operating conditions” is not implied. Exposure to absolute-maximum-rated conditions for extended periods may affect device reliability.

NOTES: 1. The input and output voltage ratings may be exceeded if the input and output current ratings are observed.
2. The package thermal impedance is calculated in accordance with JESD 51-7.

recommended operating conditions (see Note 3)

			MIN	NOM	MAX	UNIT
V_{CC}	Supply voltage		2	5	6	V
V_{IH}	High-level input voltage	V_{CC} = 2 V	1.5			V
		V_{CC} = 4.5 V	3.15			
		V_{CC} = 6 V	4.2			
V_{IL}	Low-level input voltage	V_{CC} = 2 V			0.5	V
		V_{CC} = 4.5 V			1.35	
		V_{CC} = 6 V			1.8	
V_I	Input voltage		0		V_{CC}	V
V_O	Output voltage		0		V_{CC}	V
$\Delta t/\Delta v$‡	Input transition rise/fall time	V_{CC} = 2 V			1000	ns
		V_{CC} = 4.5 V			500	
		V_{CC} = 6 V			400	
T_A	Operating free-air temperature		−55		125	°C

NOTE 3: All unused inputs of the device must be held at V_{CC} or GND to ensure proper device operation. Refer to the TI application report, *Implications of Slow or Floating CMOS Inputs*, literature number SCBA004.

‡ If this device is used in the threshold region (from V_{IL}max = 0.5 V to V_{IH}min = 1.5 V), there is a potential to go into the wrong state from induced grounding, causing double clocking. Operating with the inputs at t_t = 1000 ns and V_{CC} = 2 V does not damage the device; however, functionally, the CLK inputs are not ensured while in the shift, count, or toggle operating modes.

electrical characteristics over recommended operating free-air temperature range (unless otherwise noted)

PARAMETER	TEST CONDITIONS		V_{CC}	T_A = 25°C			T_A = -55°C TO 125°C		T_A = -40°C TO 85°C		UNIT
				MIN	TYP	MAX	MIN	MAX	MIN	MAX	
V_{OH}	$V_I = V_{IH}$ or V_{IL}	$I_{OH} = -20\ \mu A$	2 V	1.9	1.998		1.9		1.9		V
			4.5 V	4.4	4.499		4.4		4.4		
			6 V	5.9	5.999		5.9		5.9		
		$Q_{H'}$, $I_{OH} = -4$ mA	4.5 V	3.98	4.3		3.7		3.84		
		Q_A–Q_H, $I_{OH} = -6$ mA		3.98	4.3		3.7		3.84		
		$Q_{H'}$, $I_{OH} = -5.2$ mA	6 V	5.48	5.8		5.2		5.34		
		Q_A–Q_H, $I_{OH} = -7.8$ mA		5.48	5.8		5.2		5.34		
V_{OL}	$V_I = V_{IH}$ or V_{IL}	$I_{OL} = 20\ \mu A$	2 V		0.002	0.1		0.1		0.1	V
			4.5 V		0.001	0.1		0.1		0.1	
			6 V		0.001	0.1		0.1		0.1	
		$Q_{H'}$, $I_{OL} = 4$ mA	4.5 V		0.17	0.26		0.4		0.33	
		Q_A–Q_H, $I_{OL} = 6$ mA			0.17	0.26		0.4		0.33	
		$Q_{H'}$, $I_{OL} = 5.2$ mA	6 V		0.15	0.26		0.4		0.33	
		Q_A–Q_H, $I_{OL} = 7.8$ mA			0.15	0.26		0.4		0.33	
I_I	$V_I = V_{CC}$ or 0		6 V		±0.1	±100		±1000		±1000	nA
I_{OZ}	$V_O = V_{CC}$ or 0,	Q_A–Q_H	6 V		±0.01	±0.5		±10		±5	µA
I_{CC}	$V_I = V_{CC}$ or 0,	$I_O = 0$	6 V			8		160		80	µA
C_i			2 V to 6 V		3	10		10		10	pF

timing requirements over recommended operating free-air temperature range (unless otherwise noted)

			V_{CC}	T_A = 25°C		T_A = -55°C TO 125°C		T_A = -40°C TO 85°C		UNIT
				MIN	MAX	MIN	MAX	MIN	MAX	
f_{clock}	Clock frequency		2 V		6		4.2		5	MHz
			4.5 V		31		21		25	
			6 V		36		25		29	
t_w	Pulse duration	SRCLK or RCLK high or low	2 V	80		120		100		ns
			4.5 V	16		24		20		
			6 V	14		20		17		
		$\overline{\text{SRCLR}}$ low	2 V	80		120		100		
			4.5 V	16		24		20		
			6 V	14		20		17		
t_{su}	Setup time	SER before SRCLK↑	2 V	100		150		125		ns
			4.5 V	20		30		25		
			6 V	17		25		21		
		SRCLK↑ before RCLK↑†	2 V	75		113		94		
			4.5 V	15		23		19		
			6 V	13		19		16		
		$\overline{\text{SRCLR}}$ low before RCLK↑	2 V	50		75		65		
			4.5 V	10		15		13		
			6 V	9		13		11		
		$\overline{\text{SRCLR}}$ high (inactive) before SRCLK↑	2 V	50		75		60		
			4.5 V	10		15		12		
			6 V	9		13		11		
t_h	Hold time, SER after SRCLK↑		2 V	0		0		0		ns
			4.5 V	0		0		0		
			6 V	0		0		0		

† This setup time allows the storage register to receive stable data from the shift register. The clocks can be tied together, in which case the shift register is one clock pulse ahead of the storage register.

switching characteristics over recommended operating free-air temperature range, C_L = 50 pF (unless otherwise noted) (see Figure 1)

PARAMETER	FROM (INPUT)	TO (OUTPUT)	V_{CC}	T_A = 25°C			T_A = -55°C TO 125°C		T_A = -40°C TO 85°C		UNIT
				MIN	TYP	MAX	MIN	MAX	MIN	MAX	
f_{max}			2 V	6	26		4.2		5		MHz
			4.5 V	31	38		21		25		
			6 V	36	42		25		29		
t_{pd}	SRCLK	$Q_{H'}$	2 V		50	160		240		200	ns
			4.5 V		17	32		48		40	
			6 V		14	27		41		34	
	RCLK	Q_A–Q_H	2 V		50	150		225		187	
			4.5 V		17	30		45		37	
			6 V		14	26		38		32	
t_{PHL}	$\overline{SRCLR}$	$Q_{H'}$	2 V		51	175		261		219	ns
			4.5 V		18	35		52		44	
			6 V		15	30		44		37	
t_{en}	$\overline{OE}$	Q_A–Q_H	2 V		40	150		225		187	ns
			4.5 V		15	30		45		37	
			6 V		13	26		38		32	
t_{dis}	$\overline{OE}$	Q_A–Q_H	2 V		42	200		300		250	ns
			4.5 V		23	40		60		50	
			6 V		20	34		51		43	
t_t		Q_A–Q_H	2 V		28	60		90		75	ns
			4.5 V		8	12		18		15	
			6 V		6	10		15		13	
		$Q_{H'}$	2 V		28	75		110		95	
			4.5 V		8	15		22		19	
			6 V		6	13		19		16	

switching characteristics over recommended operating free-air temperature range, C_L = 150 pF (unless otherwise noted) (see Figure 1)

PARAMETER	FROM (INPUT)	TO (OUTPUT)	V_{CC}	T_A = 25°C			T_A = -55°C TO 125°C		T_A = -40°C TO 85°C		UNIT
				MIN	TYP	MAX	MIN	MAX	MIN	MAX	
t_{pd}	RCLK	Q_A–Q_H	2 V		60	200		300		250	ns
			4.5 V		22	40		60		50	
			6 V		19	34		51		43	
t_{en}	$\overline{OE}$	Q_A–Q_H	2 V		70	200		298		250	ns
			4.5 V		23	40		60		50	
			6 V		19	34		51		43	
t_t		Q_A–Q_H	2 V		45	210		315		265	ns
			4.5 V		17	42		63		53	
			6 V		13	36		53		45	

operating characteristics, T_A = 25°C

PARAMETER		TEST CONDITIONS	TYP	UNIT
C_{pd}	Power dissipation capacitance	No load	400	pF

PARAMETER MEASUREMENT INFORMATION

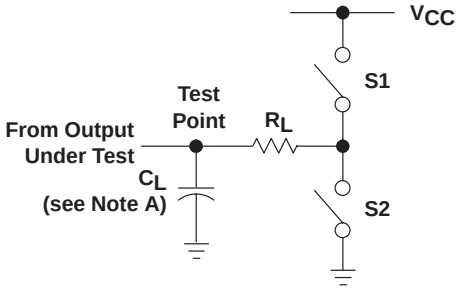

LOAD CIRCUIT

PARAMETER		R_L	C_L	S1	S2
t_{en}	t_{PZH}	1 kΩ	50 pF or 150 pF	Open	Closed
	t_{PZL}			Closed	Open
t_{dis}	t_{PHZ}	1 kΩ	50 pF	Open	Closed
	t_{PLZ}			Closed	Open
t_{pd} or t_t		−−	50 pF or 150 pF	Open	Open

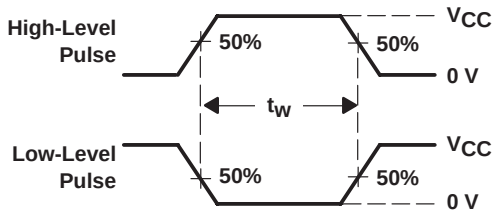

VOLTAGE WAVEFORMS
PULSE DURATIONS

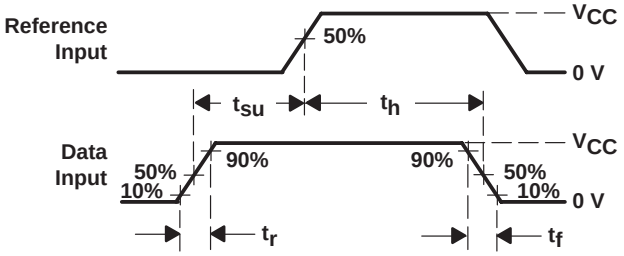

VOLTAGE WAVEFORMS
SETUP AND HOLD AND INPUT RISE AND FALL TIMES

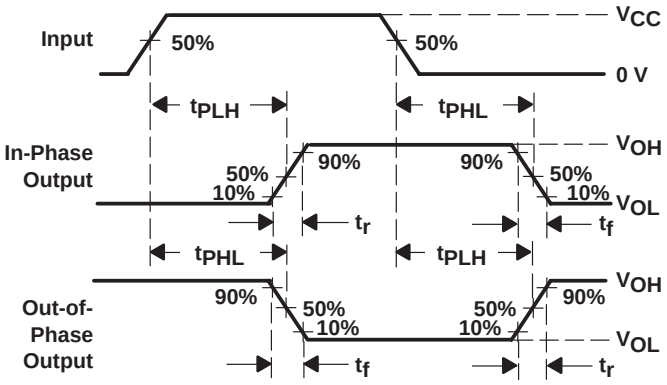

VOLTAGE WAVEFORMS
PROPAGATION DELAY AND OUTPUT TRANSITION TIMES

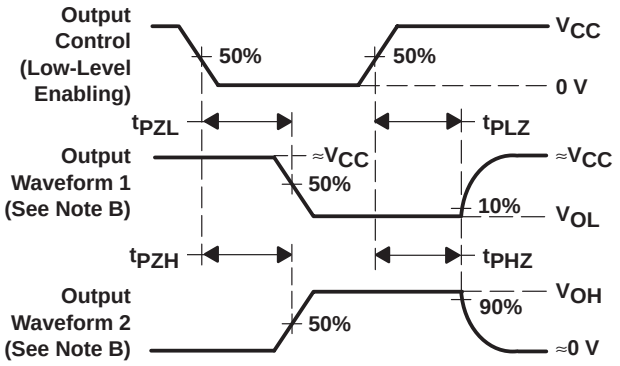

VOLTAGE WAVEFORMS
ENABLE AND DISABLE TIMES FOR 3-STATE OUTPUTS

NOTES:
A. C_L includes probe and test-fixture capacitance.
B. Waveform 1 is for an output with internal conditions such that the output is low, except when disabled by the output control. Waveform 2 is for an output with internal conditions such that the output is high, except when disabled by the output control.
C. Phase relationships between waveforms were chosen arbitrarily. All input pulses are supplied by generators having the following characteristics: PRR ≤ 1 MHz, Z_O = 50 Ω, t_r = 6 ns, t_f = 6 ns.
D. For clock inputs, f_{max} is measured when the input duty cycle is 50%.
E. The outputs are measured one at a time, with one input transition per measurement.
F. t_{PLZ} and t_{PHZ} are the same as t_{dis}.
G. t_{PZL} and t_{PZH} are the same as t_{en}.
H. t_{PLH} and t_{PHL} are the same as t_{pd}.

Figure 1. Load Circuit and Voltage Waveforms

PACKAGING INFORMATION

Orderable Device	Status (1)	Package Type	Package Drawing	Pins	Package Qty	Eco Plan (2)	Lead finish/ Ball material (6)	MSL Peak Temp (3)	Op Temp (°C)	Device Marking (4/5)	Samples
CD74HC595DW	ACTIVE	SOIC	DW	16	40	RoHS & Green	NIPDAU	Level-1-260C-UNLIM	-55 to 125	HC595M	Samples
CD74HC595DWR	ACTIVE	SOIC	DW	16	2000	RoHS & Green	NIPDAU	Level-1-260C-UNLIM	-55 to 125	HC595M	Samples
CD74HC595E	ACTIVE	PDIP	N	16	25	RoHS & Green	NIPDAU	N / A for Pkg Type	-55 to 125	CD74HC595E	Samples
CD74HC595EE4	ACTIVE	PDIP	N	16	25	RoHS & Green	NIPDAU	N / A for Pkg Type	-55 to 125	CD74HC595E	Samples
CD74HC595M	ACTIVE	SOIC	D	16	40	RoHS & Green	NIPDAU	Level-1-260C-UNLIM	-55 to 125	HC595M	Samples
CD74HC595M96	ACTIVE	SOIC	D	16	2500	RoHS & Green	NIPDAU	Level-1-260C-UNLIM	-55 to 125	HC595M	Samples
CD74HC595MG4	ACTIVE	SOIC	D	16	40	RoHS & Green	NIPDAU	Level-1-260C-UNLIM	-55 to 125	HC595M	Samples
CD74HC595MT	ACTIVE	SOIC	D	16	250	RoHS & Green	NIPDAU	Level-1-260C-UNLIM	-55 to 125	HC595M	Samples
CD74HC595NSR	ACTIVE	SO	NS	16	2000	RoHS & Green	NIPDAU	Level-1-260C-UNLIM	-55 to 125	HC595M	Samples
CD74HC595SM96	ACTIVE	SSOP	DB	16	2000	RoHS & Green	NIPDAU	Level-1-260C-UNLIM	-55 to 125	HJ595	Samples

(1) The marketing status values are defined as follows:
ACTIVE: Product device recommended for new designs.
LIFEBUY: TI has announced that the device will be discontinued, and a lifetime-buy period is in effect.
NRND: Not recommended for new designs. Device is in production to support existing customers, but TI does not recommend using this part in a new design.
PREVIEW: Device has been announced but is not in production. Samples may or may not be available.
OBSOLETE: TI has discontinued the production of the device.

(2) **RoHS:** TI defines "RoHS" to mean semiconductor products that are compliant with the current EU RoHS requirements for all 10 RoHS substances, including the requirement that RoHS substance do not exceed 0.1% by weight in homogeneous materials. Where designed to be soldered at high temperatures, "RoHS" products are suitable for use in specified lead-free processes. TI may reference these types of products as "Pb-Free".
RoHS Exempt: TI defines "RoHS Exempt" to mean products that contain lead but are compliant with EU RoHS pursuant to a specific EU RoHS exemption.
Green: TI defines "Green" to mean the content of Chlorine (Cl) and Bromine (Br) based flame retardants meet JS709B low halogen requirements of <=1000ppm threshold. Antimony trioxide based flame retardants must also meet the <=1000ppm threshold requirement.

(3) MSL, Peak Temp. - The Moisture Sensitivity Level rating according to the JEDEC industry standard classifications, and peak solder temperature.

(4) There may be additional marking, which relates to the logo, the lot trace code information, or the environmental category on the device.

(5) Multiple Device Markings will be inside parentheses. Only one Device Marking contained in parentheses and separated by a "~" will appear on a device. If a line is indented then it is a continuation of the previous line and the two combined represent the entire Device Marking for that device.

(6) Lead finish/Ball material - Orderable Devices may have multiple material finish options. Finish options are separated by a vertical ruled line. Lead finish/Ball material values may wrap to two lines if the finish value exceeds the maximum column width.

Important Information and Disclaimer: The information provided on this page represents TI's knowledge and belief as of the date that it is provided. TI bases its knowledge and belief on information provided by third parties, and makes no representation or warranty as to the accuracy of such information. Efforts are underway to better integrate information from third parties. TI has taken and continues to take reasonable steps to provide representative and accurate information but may not have conducted destructive testing or chemical analysis on incoming materials and chemicals. TI and TI suppliers consider certain information to be proprietary, and thus CAS numbers and other limited information may not be available for release.

In no event shall TI's liability arising out of such information exceed the total purchase price of the TI part(s) at issue in this document sold by TI to Customer on an annual basis.

TAPE AND REEL INFORMATION

REEL DIMENSIONS

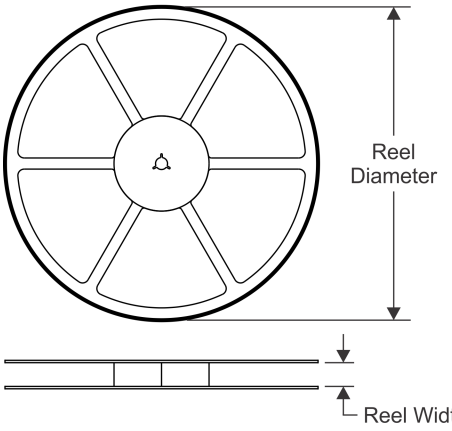

TAPE DIMENSIONS

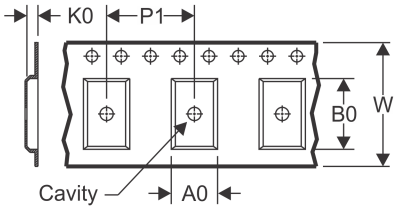

A0	Dimension designed to accommodate the component width
B0	Dimension designed to accommodate the component length
K0	Dimension designed to accommodate the component thickness
W	Overall width of the carrier tape
P1	Pitch between successive cavity centers

QUADRANT ASSIGNMENTS FOR PIN 1 ORIENTATION IN TAPE

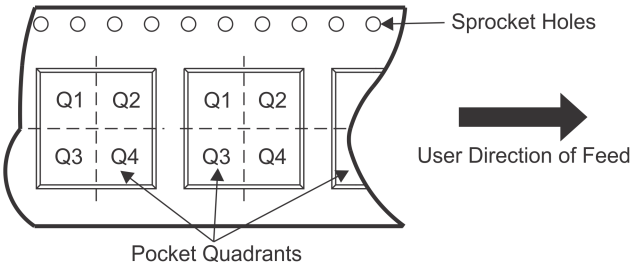

*All dimensions are nominal

Device	Package Type	Package Drawing	Pins	SPQ	Reel Diameter (mm)	Reel Width W1 (mm)	A0 (mm)	B0 (mm)	K0 (mm)	P1 (mm)	W (mm)	Pin1 Quadrant
CD74HC595DWR	SOIC	DW	16	2000	330.0	16.4	10.75	10.7	2.7	12.0	16.0	Q1
CD74HC595M96	SOIC	D	16	2500	330.0	16.4	6.5	10.3	2.1	8.0	16.0	Q1
CD74HC595NSR	SO	NS	16	2000	330.0	16.4	8.2	10.5	2.5	12.0	16.0	Q1
CD74HC595SM96	SSOP	DB	16	2000	330.0	16.4	8.35	6.6	2.4	12.0	16.0	Q1

TAPE AND REEL BOX DIMENSIONS

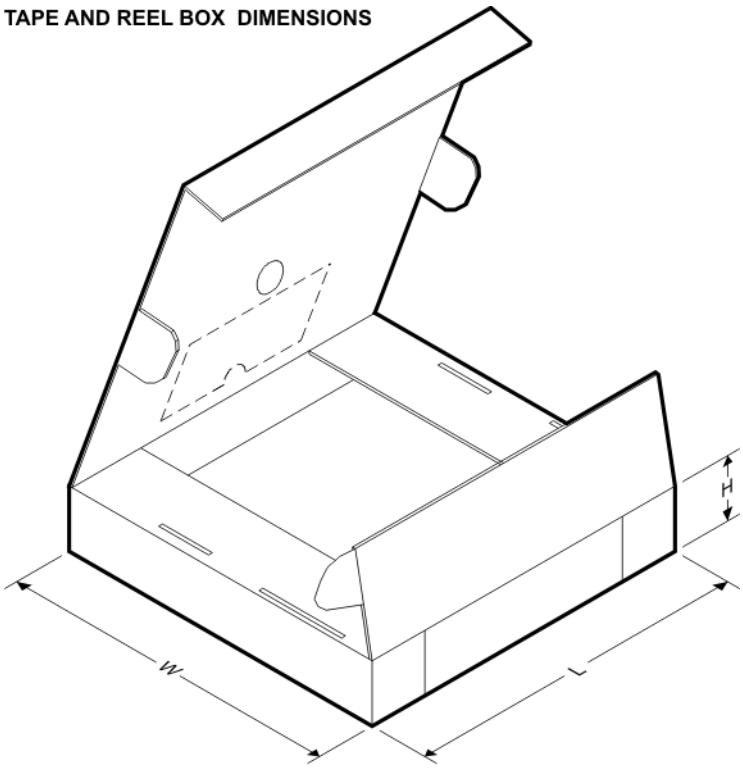

*All dimensions are nominal

Device	Package Type	Package Drawing	Pins	SPQ	Length (mm)	Width (mm)	Height (mm)
CD74HC595DWR	SOIC	DW	16	2000	350.0	350.0	43.0
CD74HC595M96	SOIC	D	16	2500	340.5	336.1	32.0
CD74HC595NSR	SO	NS	16	2000	853.0	449.0	35.0
CD74HC595SM96	SSOP	DB	16	2000	853.0	449.0	35.0

TUBE

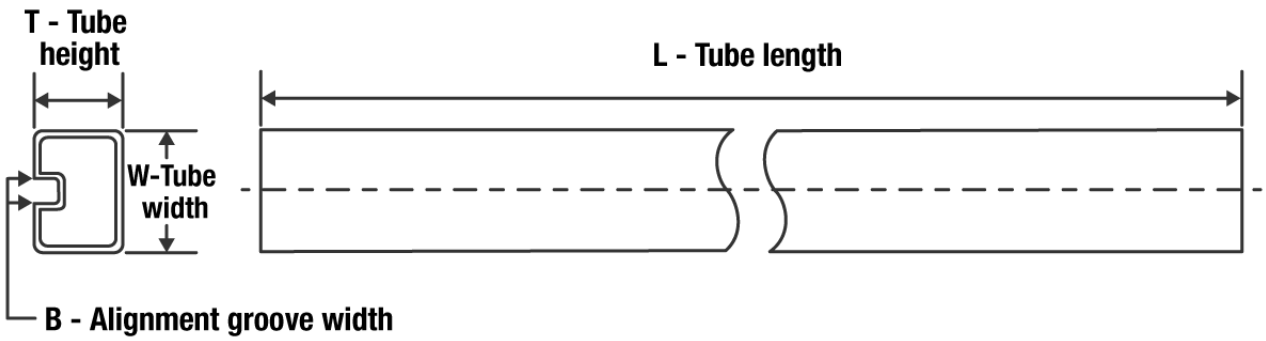

*All dimensions are nominal

Device	Package Name	Package Type	Pins	SPQ	L (mm)	W (mm)	T (µm)	B (mm)
CD74HC595DW	DW	SOIC	16	40	506.98	12.7	4826	6.6
CD74HC595E	N	PDIP	16	25	506	13.97	11230	4.32
CD74HC595EE4	N	PDIP	16	25	506	13.97	11230	4.32
CD74HC595M	D	SOIC	16	40	507	8	3940	4.32
CD74HC595MG4	D	SOIC	16	40	507	8	3940	4.32

GENERIC PACKAGE VIEW

DW 16

SOIC - 2.65 mm max height

7.5 x 10.3, 1.27 mm pitch

SMALL OUTLINE INTEGRATED CIRCUIT

This image is a representation of the package family, actual package may vary.
Refer to the product data sheet for package details.

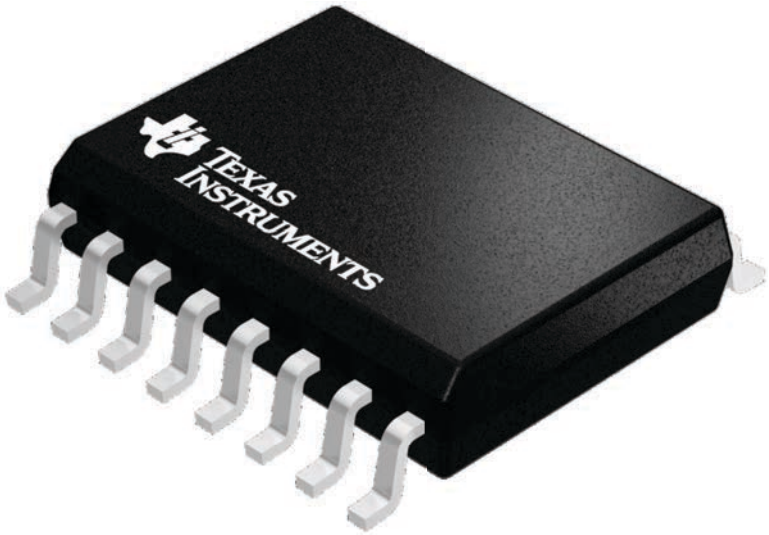

4224780/A

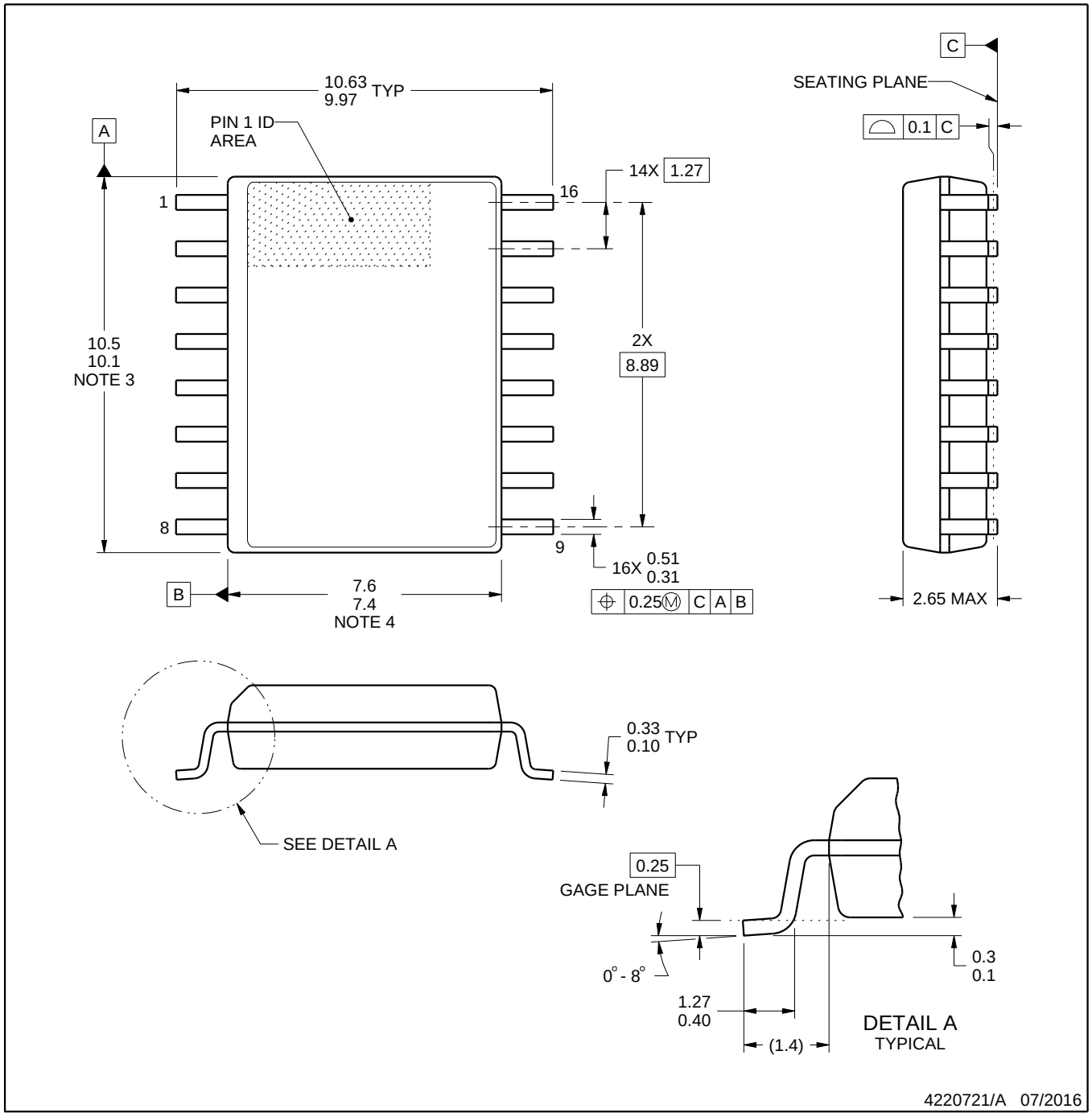

NOTES:

1. All linear dimensions are in millimeters. Dimensions in parenthesis are for reference only. Dimensioning and tolerancing per ASME Y14.5M.
2. This drawing is subject to change without notice.
3. This dimension does not include mold flash, protrusions, or gate burrs. Mold flash, protrusions, or gate burrs shall not exceed 0.15 mm, per side.
4. This dimension does not include interlead flash. Interlead flash shall not exceed 0.25 mm, per side.
5. Reference JEDEC registration MS-013.

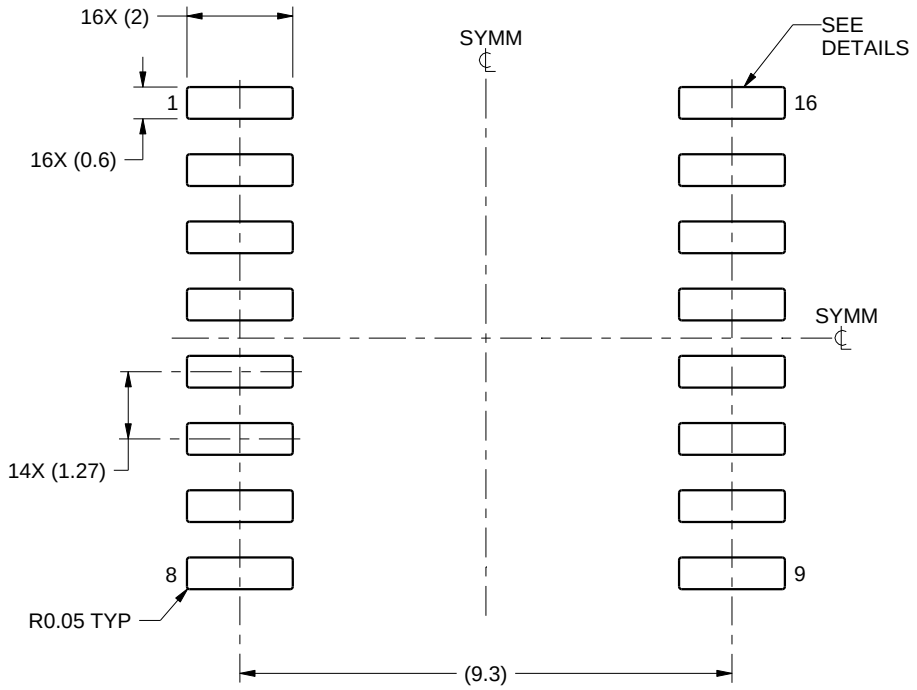

LAND PATTERN EXAMPLE
SCALE:7X

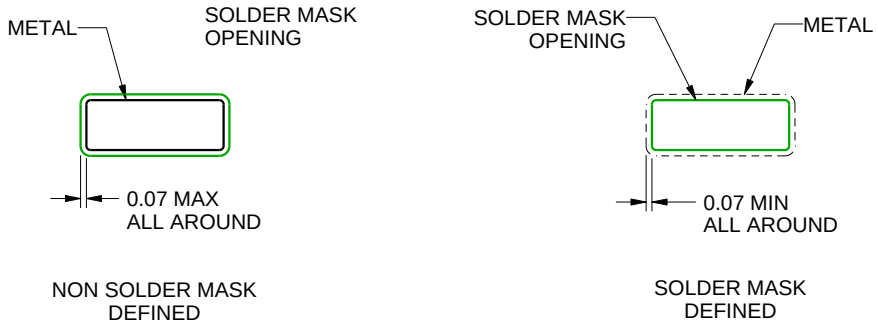

SOLDER MASK DETAILS

4220721/A 07/2016

NOTES: (continued)

6. Publication IPC-7351 may have alternate designs.
7. Solder mask tolerances between and around signal pads can vary based on board fabrication site.

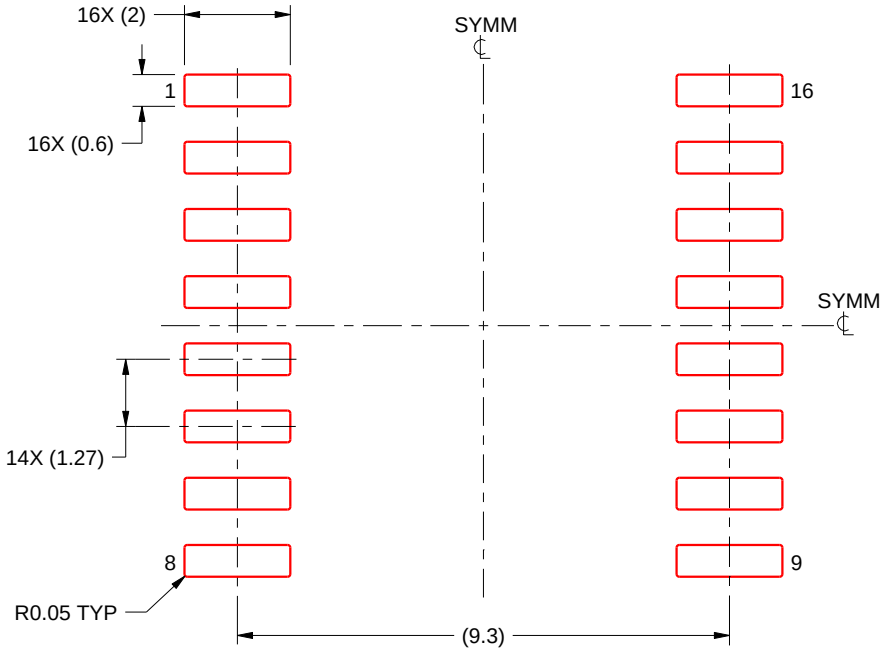

SOLDER PASTE EXAMPLE
BASED ON 0.125 mm THICK STENCIL
SCALE:7X

4220721/A 07/2016

NOTES: (continued)

8. Laser cutting apertures with trapezoidal walls and rounded corners may offer better paste release. IPC-7525 may have alternate design recommendations.
9. Board assembly site may have different recommendations for stencil design.

DB (R-PDSO-G)** **PLASTIC SMALL-OUTLINE**

28 PINS SHOWN

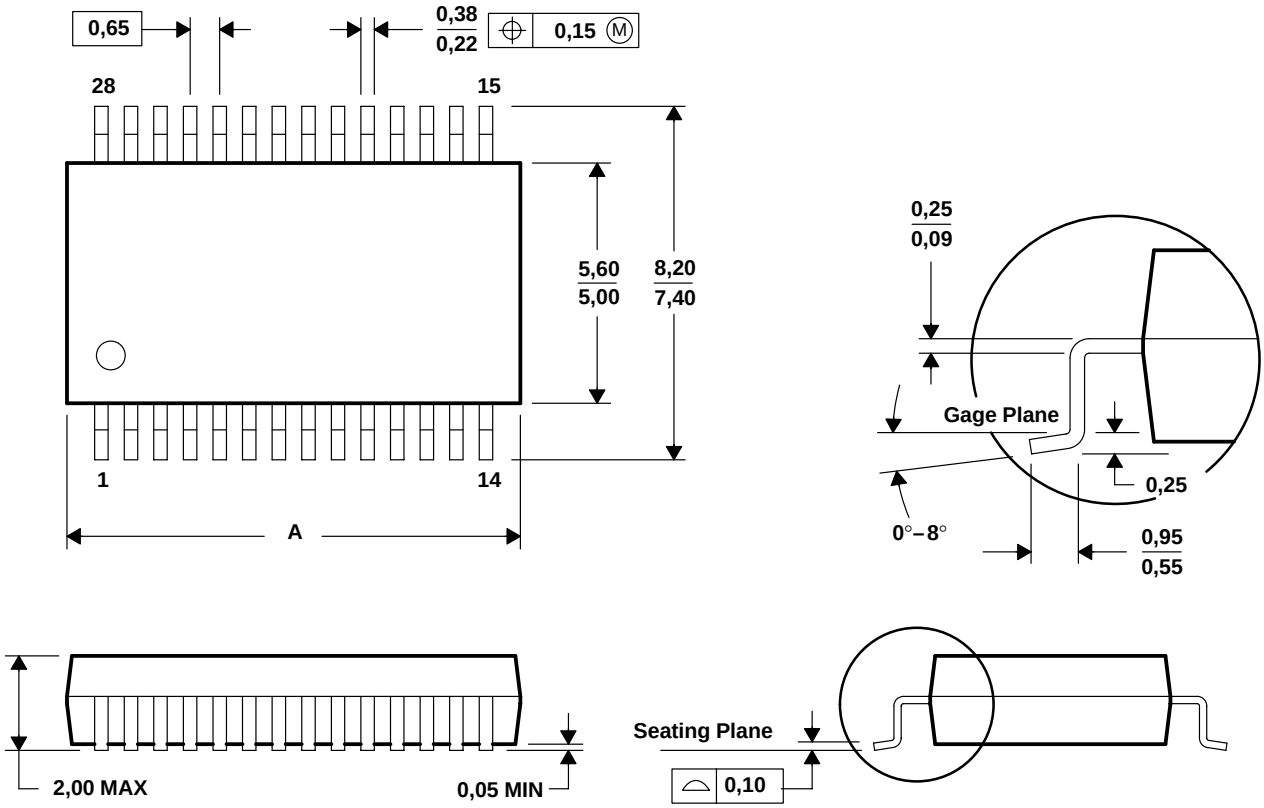

DIM \ PINS **	14	16	20	24	28	30	38
A MAX	6,50	6,50	7,50	8,50	10,50	10,50	12,90
A MIN	5,90	5,90	6,90	7,90	9,90	9,90	12,30

4040065 /E 12/01

NOTES: A. All linear dimensions are in millimeters.
B. This drawing is subject to change without notice.
C. Body dimensions do not include mold flash or protrusion not to exceed 0,15.
D. Falls within JEDEC MO-150

N (R–PDIP–T**) PLASTIC DUAL–IN–LINE PACKAGE

16 PINS SHOWN

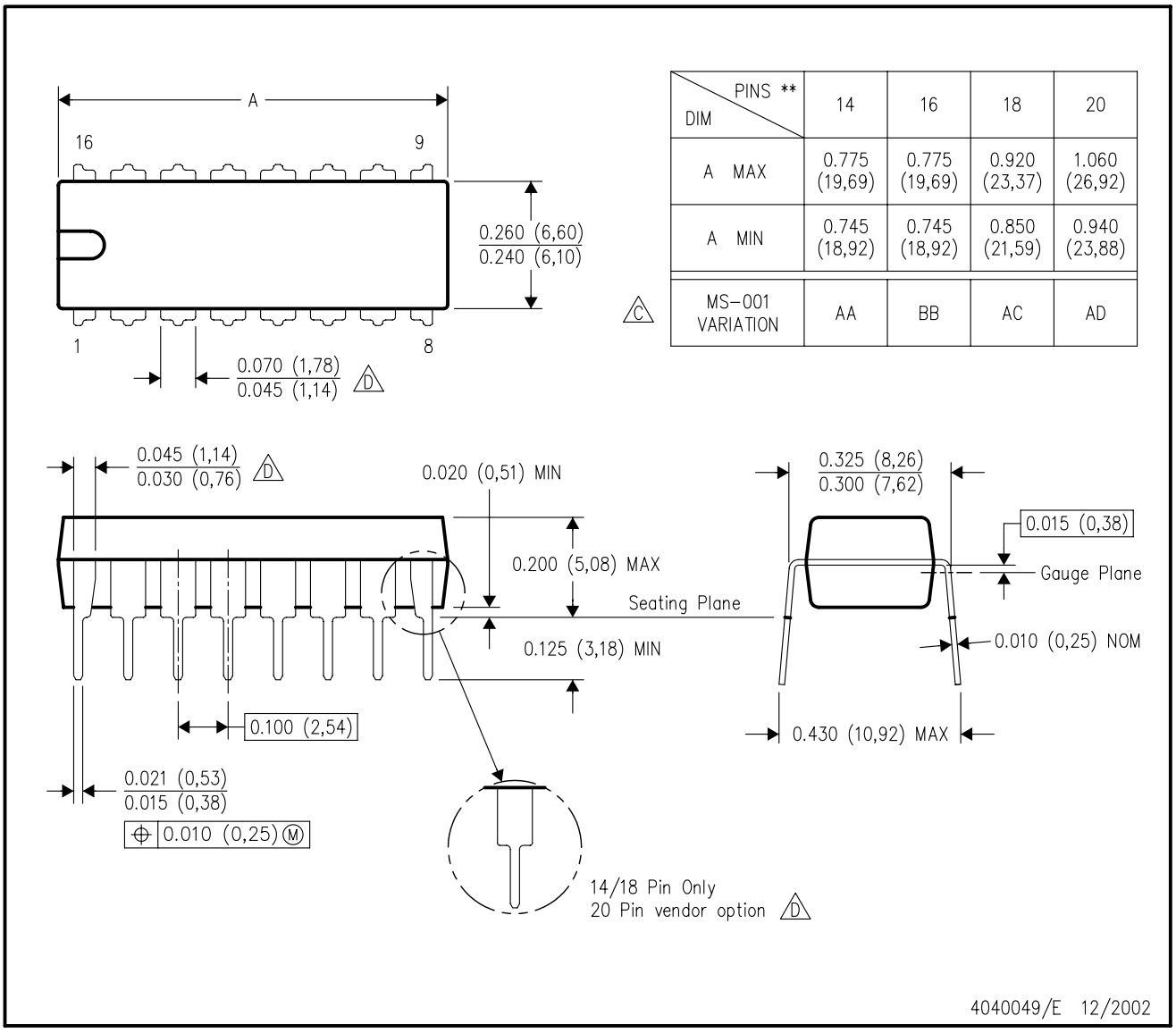

DIM \ PINS **	14	16	18	20
A MAX	0.775 (19,69)	0.775 (19,69)	0.920 (23,37)	1.060 (26,92)
A MIN	0.745 (18,92)	0.745 (18,92)	0.850 (21,59)	0.940 (23,88)
MS–001 VARIATION (C)	AA	BB	AC	AD

NOTES:
A. All linear dimensions are in inches (millimeters).
B. This drawing is subject to change without notice.
C. Falls within JEDEC MS–001, except 18 and 20 pin minimum body length (Dim A).
D. The 20 pin end lead shoulder width is a vendor option, either half or full width.

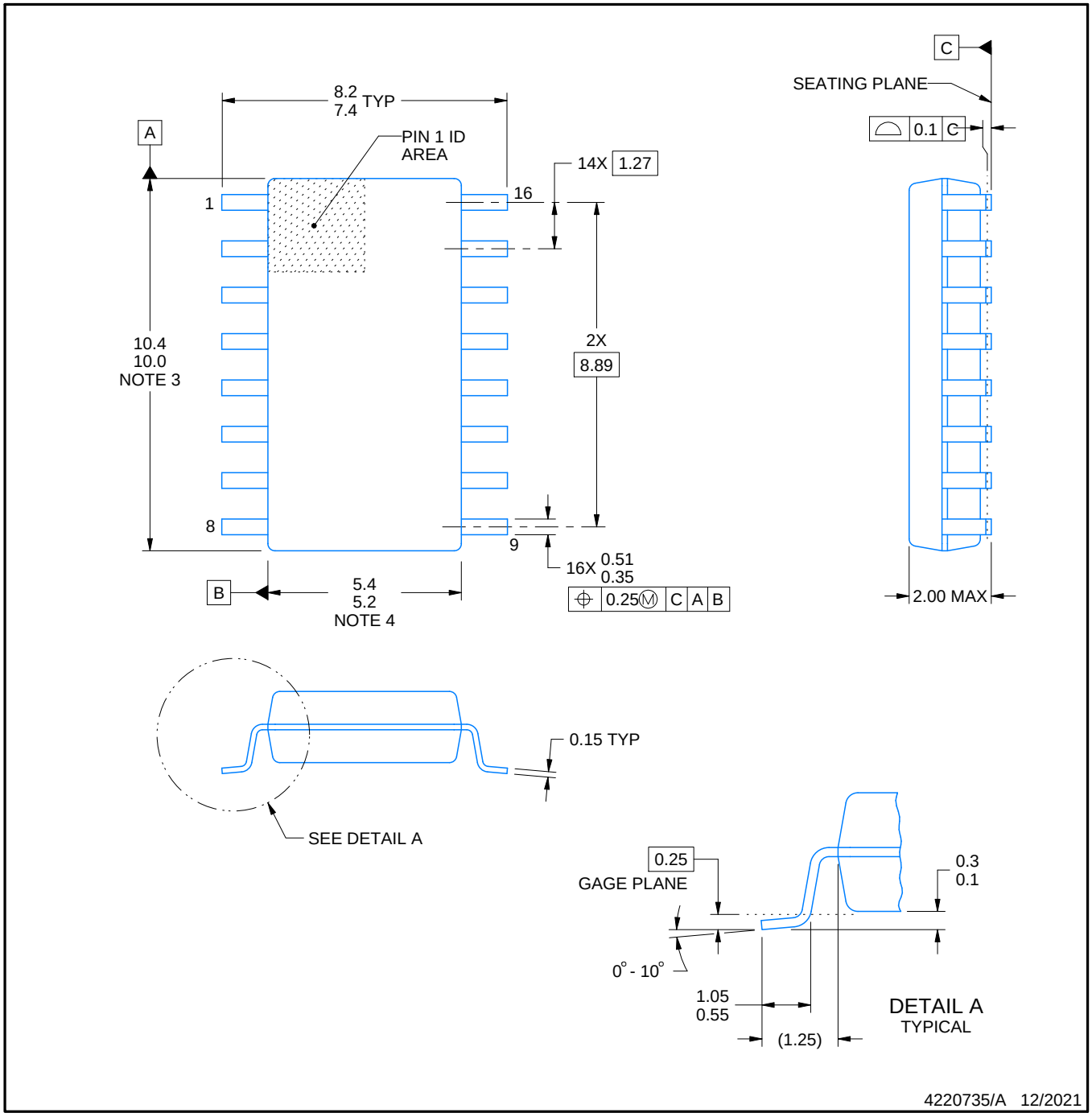

NOTES:

1. All linear dimensions are in millimeters. Dimensions in parenthesis are for reference only. Dimensioning and tolerancing per ASME Y14.5M.
2. This drawing is subject to change without notice.
3. This dimension does not include mold flash, protrusions, or gate burrs. Mold flash, protrusions, or gate burrs shall not exceed 0.15 mm, per side.
4. This dimension does not include interlead flash. Interlead flash shall not exceed 0.25 mm, per side.

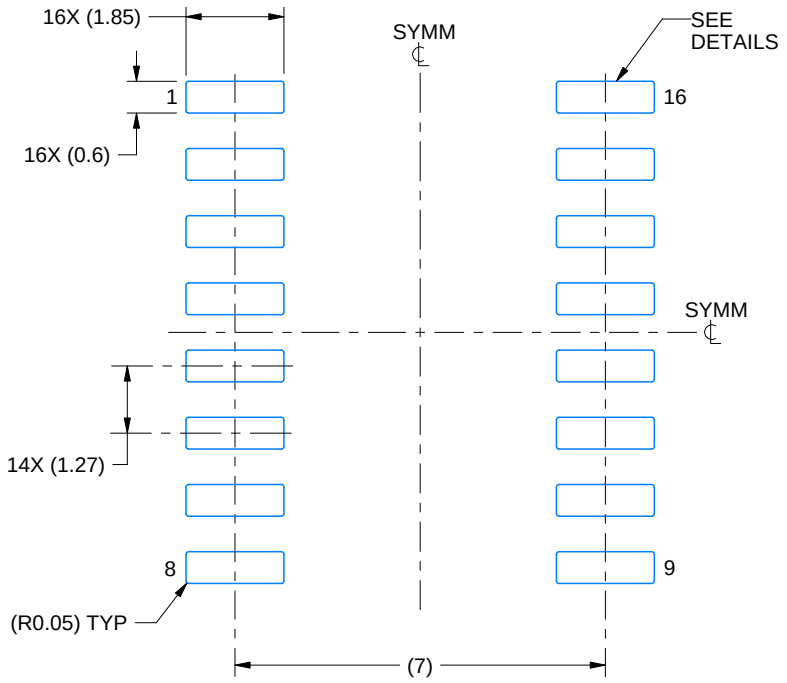

LAND PATTERN EXAMPLE
SCALE:7X

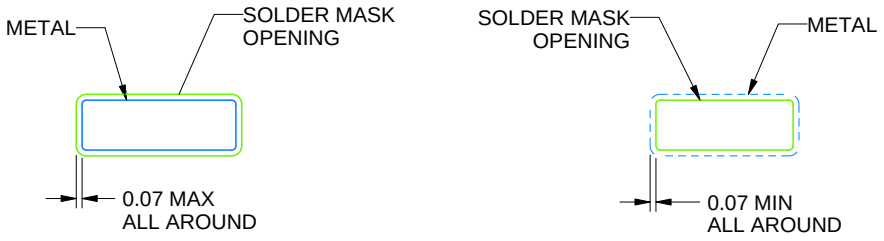

NON SOLDER MASK DEFINED

SOLDER MASK DEFINED

SOLDER MASK DETAILS

4220735/A 12/2021

NOTES: (continued)

5. Publication IPC-7351 may have alternate designs.
6. Solder mask tolerances between and around signal pads can vary based on board fabrication site.

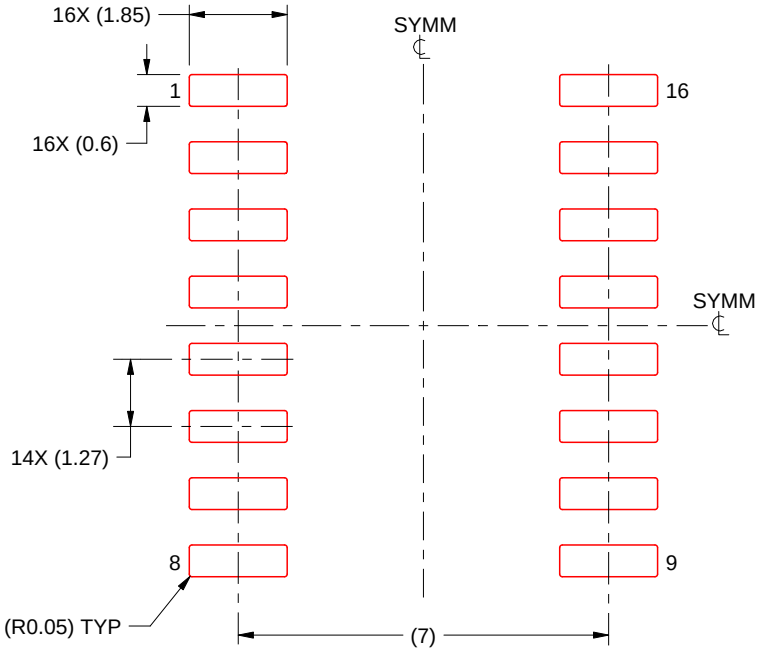

SOLDER PASTE EXAMPLE
BASED ON 0.125 mm THICK STENCIL
SCALE:7X

4220735/A 12/2021

NOTES: (continued)

7. Laser cutting apertures with trapezoidal walls and rounded corners may offer better paste release. IPC-7525 may have alternate design recommendations.
8. Board assembly site may have different recommendations for stencil design.

D (R–PDSO–G16) PLASTIC SMALL OUTLINE

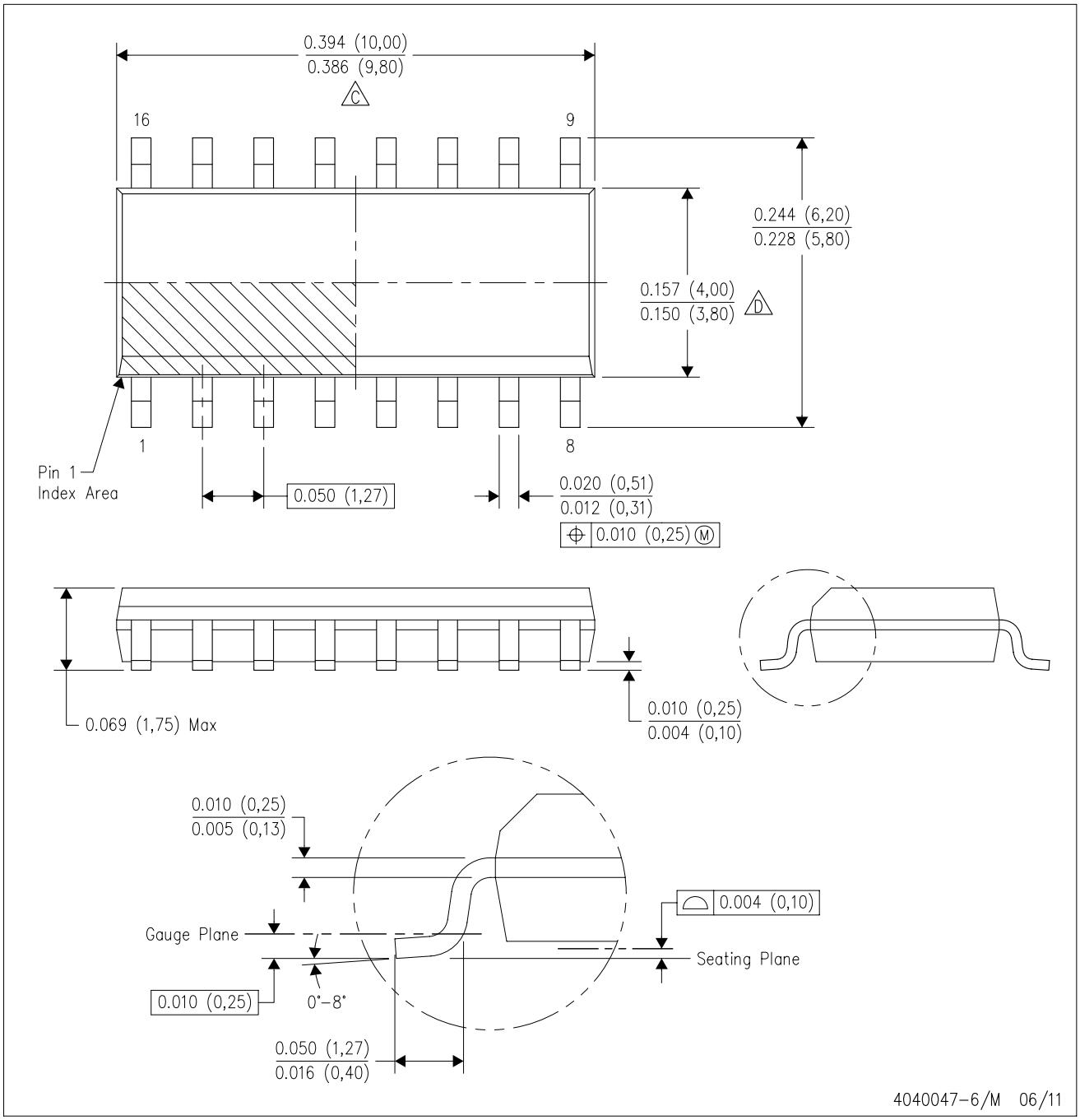

NOTES:
A. All linear dimensions are in inches (millimeters).
B. This drawing is subject to change without notice.
C. Body length does not include mold flash, protrusions, or gate burrs. Mold flash, protrusions, or gate burrs shall not exceed 0.006 (0,15) each side.
D. Body width does not include interlead flash. Interlead flash shall not exceed 0.017 (0,43) each side.
E. Reference JEDEC MS–012 variation AC.

D (R–PDSO–G16) PLASTIC SMALL OUTLINE

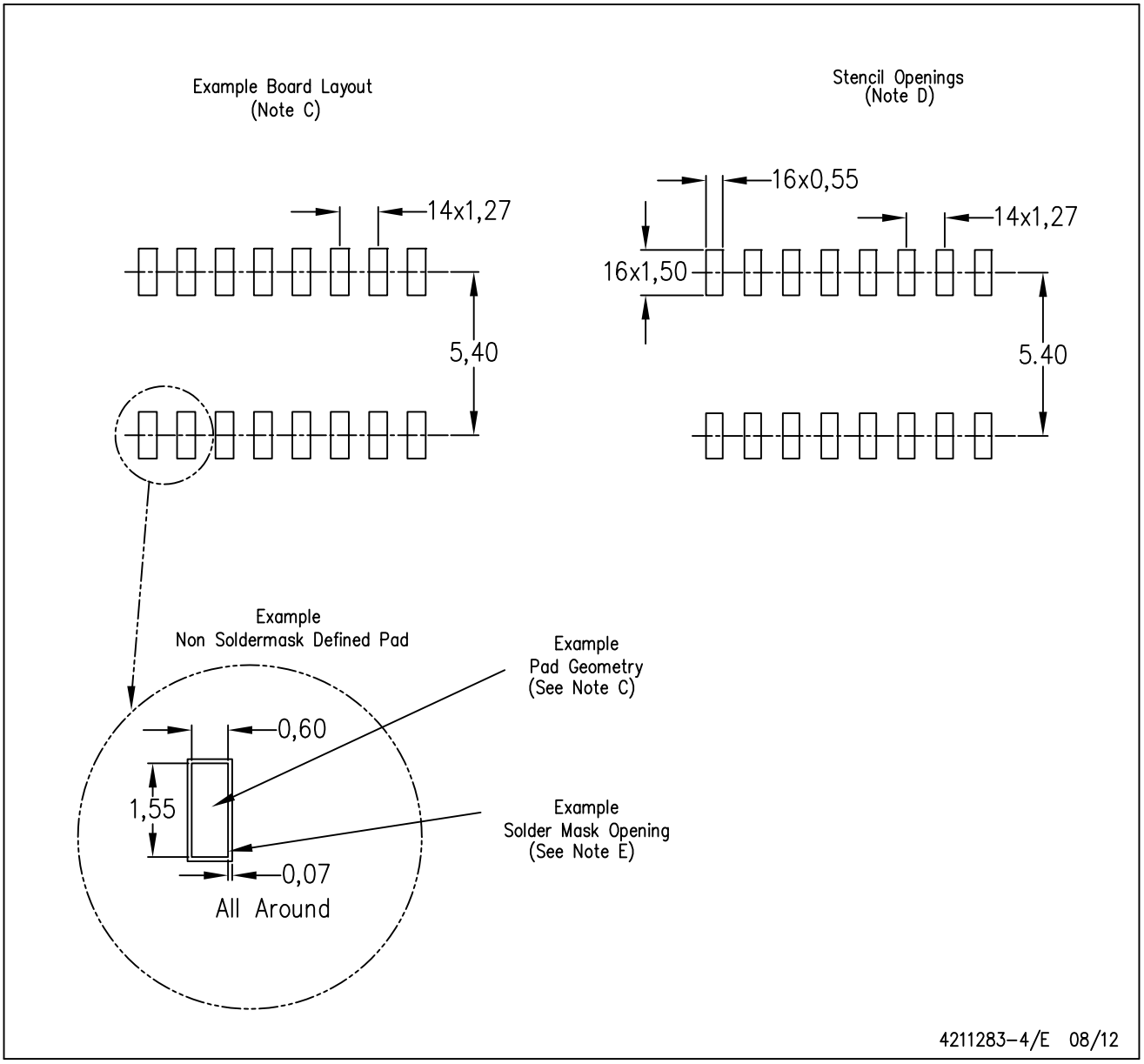

NOTES:
A. All linear dimensions are in millimeters.
B. This drawing is subject to change without notice.
C. Publication IPC–7351 is recommended for alternate designs.
D. Laser cutting apertures with trapezoidal walls and also rounding corners will offer better paste release. Customers should contact their board assembly site for stencil design recommendations. Refer to IPC–7525 for other stencil recommendations.
E. Customers should contact their board fabrication site for solder mask tolerances between and around signal pads.

MECHANICAL DATA

NS (R-PDSO-G)** **PLASTIC SMALL-OUTLINE PACKAGE**

14-PINS SHOWN

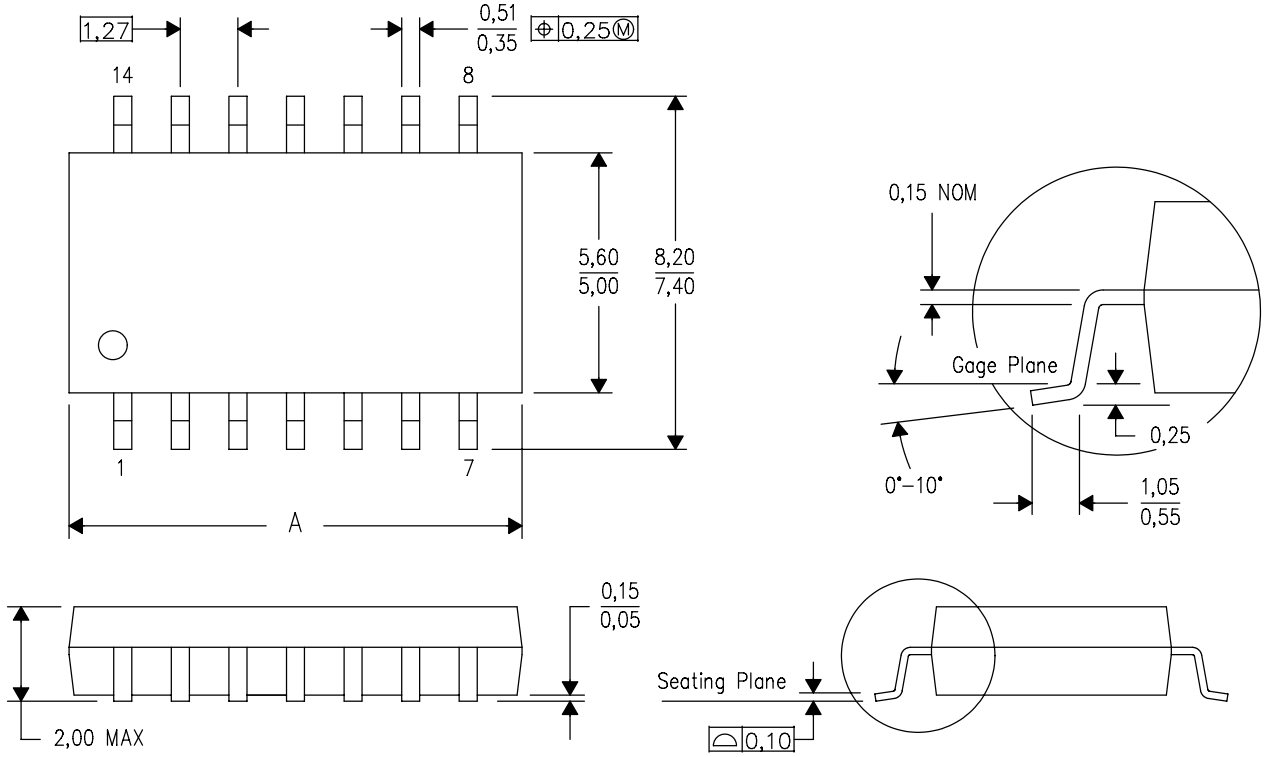

DIM \ PINS **	14	16	20	24
A MAX	10,50	10,50	12,90	15,30
A MIN	9,90	9,90	12,30	14,70

4040062/C 03/03

NOTES:
A. All linear dimensions are in millimeters.
B. This drawing is subject to change without notice.
C. Body dimensions do not include mold flash or protrusion, not to exceed 0,15.

IMPORTANT NOTICE AND DISCLAIMER

TI PROVIDES TECHNICAL AND RELIABILITY DATA (INCLUDING DATA SHEETS), DESIGN RESOURCES (INCLUDING REFERENCE DESIGNS), APPLICATION OR OTHER DESIGN ADVICE, WEB TOOLS, SAFETY INFORMATION, AND OTHER RESOURCES “AS IS” AND WITH ALL FAULTS, AND DISCLAIMS ALL WARRANTIES, EXPRESS AND IMPLIED, INCLUDING WITHOUT LIMITATION ANY IMPLIED WARRANTIES OF MERCHANTABILITY, FITNESS FOR A PARTICULAR PURPOSE OR NON-INFRINGEMENT OF THIRD PARTY INTELLECTUAL PROPERTY RIGHTS.

These resources are intended for skilled developers designing with TI products. You are solely responsible for (1) selecting the appropriate TI products for your application, (2) designing, validating and testing your application, and (3) ensuring your application meets applicable standards, and any other safety, security, regulatory or other requirements.

These resources are subject to change without notice. TI grants you permission to use these resources only for development of an application that uses the TI products described in the resource. Other reproduction and display of these resources is prohibited. No license is granted to any other TI intellectual property right or to any third party intellectual property right. TI disclaims responsibility for, and you will fully indemnify TI and its representatives against, any claims, damages, costs, losses, and liabilities arising out of your use of these resources.

TI’s products are provided subject to TI’s Terms of Sale or other applicable terms available either on ti.com or provided in conjunction with such TI products. TI’s provision of these resources does not expand or otherwise alter TI’s applicable warranties or warranty disclaimers for TI products.

TI objects to and rejects any additional or different terms you may have proposed.

Mailing Address: Texas Instruments, Post Office Box 655303, Dallas, Texas 75265
Copyright © 2022, Texas Instruments Incorporated